Osprey Intelligent Endpoint User Guide

Copyright

Copyright (c) 2020 3D-P. All rights reserved.

Information in this document is subject to change without notice and does not represent a commitment on the part of 3D-P. The document may not, in whole or part, be copied, photocopied, reproduced, translated, or reduced to any electronic medium or machine- readable form without prior consent, in writing, from 3D-P.

Trademark Notice

The 3D-P logo, *Technology :: Connected®* and *Intelligent Endpoint®* are registered trademarks of 3D-P. All other trademarks are the property of their respective owners.

FCC, IC and Other Certification Statements

This equipment has been tested and found to comply with the limits for a Class A digital device, pursuant to Part 15 of the FCC Rules. These limits are designed to provide reasonable protection against harmful interference in a commercial environment.

This device generates, uses, and can radiate radio frequency energy and, if not installed and used in accordance with this users guide, may cause harmful interference in which case the user will be required to correct the interference at their own expense.

This Class B digital device apparatus complies with Industry Canada license-exempt RSS standard(s). Operation is subject to the following two conditions: (1) this device may not cause interference, and (2) this device must accept any interference, including interference that may cause undesired operation of the device.

L'appareil présent conforme aux CNR d'Industrie Canada applicables aux appareils radio exempts de licence. L'exploitation est autorisée aux deux conditions suivantes : (1) l'appareil ne doit pas produire de brouillage, et (2) l'utilisateur de l'appareil doit accepter tout brouillage radioélectrique subi, même si le brouillage est susceptible d'en compromettre le fonctionnement.

To ensure compliance with various national and international Electromagnetic Field (EMF) standards, the system should only be operated with approved antennas and accessories (described within this document). As this product is intended for industrial applications, professional installation is required to guarantee that this is done correctly.

Required Antenna Separation

The FCC/IC wireless approval for this product is conditional on maintaining at least 20cm separation between the antennas of all radio transceivers[1]. There is no restriction for the separation between the antennas from the same transceiver, but installation testing is recommended to verify the system performance that is achieved with a specific antenna deployment. Osprey transceivers are denoted by the combination of the frequency band and technology. For example, a Rajant 2.4 GHz antenna, Rajant 5 GHz antenna, and an LTE antenna all use different transceivers.

All antennas should be connected with 50 ohm coaxial cable. Low loss LMR400 ultra-flex cable, or better, is recommended for all installations.

Warning: To satisfy FCC RF exposure requirements a minimum safe distance of 35 cm must be maintained between this device and all persons while the device is operating.

Caution: To reduce potential radio interference to other users, the antenna type and its gain should be chosen so that the Equivalent Isotropically Radiated Power (EIRP) is not more than that permitted for successful communication.

Caution: For all antenna separation concerns, on-bench or once installed, please contact 3D-P Support.

[1] This includes any external antennas that are in proximity to the Osprey radio system.

Table of Contents

Osprey Intelligent Endpoint User Guide 1
Copyright 2
Trademark Notice 2
FCC, IC and Other Certification Statements 3
Required Antenna Separation 4
Table of Contents 5
Revision History 6
Preface 7
Related Documentation 7
Getting Help 8
1. Osprey Intelligent Endpoint 9
1.1 Wireless Radio Options 9
1.2 Connectors 12
1.2.1 Power & Comm Connector 13
1.2.2 Radio Antenna Connectors 14
1.3 Approved Antennas for Unlicensed Bands 15
1.4 LTE Antenna & EIRP Requirements 15
1.5 Doodle Labs WiFi Output Power and Antenna Requirements 17
1.6 Rajant Output Power and Antenna Requirements 19
1.7 LEDs 21
Appendix A : Physical Installation 23
A.1 Mounting 23
A.1.1 Dimensions 23
A.1.2 Mounting Plate Dimensions 24
A.1.3 Equipment Location and Physical Mounting 25
A.2 Connecting Power 26
A.2.1 Cable Connections 26
A.2.2 Proper Grounding on Mobile Machinery 28
A.3 Radio Antenna Mounting 29
A.3.1 Bracket Assembly 29
A.3.2 Installation 30
A.4 GPS Antenna Mounting 30
A.4.1 Bracket Assembly 30
A.5 Antenna Connection and Weatherproofing 31
Appendix B : Connectivity via COM Port 32
Appendix C : Connectivity via Recovery IP 32
Appendix D : Additional Information 33

Revision History

Rev	Date	Detail
1.02	Oct 7, 2020	Issued for release
1.03	Nov 30, 2020	Update separation distance to 35 cm based on MPE requirements

List of Figures

Figure 1: Osprey Connectors (LTE + Rajant option shown) 12
Figure 2: Osprey Connector Layout Label 12
Figure 3: CBL-R5PWR18 Breakout Schematic 13
Figure 4: LTE Only Connector Layout 14
Figure 5: LTE + WiFi Connector Layout 14
Figure 6: LTE + WiFi Connector Layout 14
Figure 7: Top View of Osprey with LEDs shown 21
Figure 8: Relevant dimensions 23
Figure 9: Mounting bracket dimensions 24
Figure 10: Cable termination 26
Figure 11: Cable connections 27
Figure 12: Machine grounding 28
Figure 13: Bracket assembly 29
Figure 14: Handrail Mounting Example 30
Figure 15: Bracket Assembly 30
Figure 16: Antenna Weather Proofing 31

List of Tables

Table 1: LTE Antenna Gain and Collocated Radio Transmitter Specifications 15
Table 2: Recommended LTE Main/Diversity Antenna Specifications 16
Table 3: Tx and Rx Performance at 2.4 GHz 17
Table 4: Tx and Rx Performance at 5 GHz 18
Table 5: Tx Settings at 2.4 GHz 19
Table 6: Tx Settings at 5 GHz 20
Table 7: Rajant LED Feedback 22

Preface

This document provides information and guidance to all personnel involved with the installation, configuration and on-going maintenance/use of 3D-P's next generation Osprey Intelligent Endpoint (IEP).

This User Guide introduces the 3D-P IEP and discusses its features and capabilities. For each type of Osprey, it describes the:

- Technical components
- Common accessories
- Models (including specifications per device)
- Installation guidelines
- Basic configuration

Related Documentation

Ties System User Guide

This document contains information on the software ecosystem used to configure and maintain Osprey Intelligent Endpoints.

BC|Commander v11 User Guide

This document contains information on the Rajant BC|Commander management application, used to configure and maintain the radio and InstaMesh configurations of the Rajant BreadCrumb equipped Intelligent Endpoints.

Getting Help

3D-P provides email and telephone Technical Support for Customers with an active Service Level Agreement (SLA). To initiate a new Support Ticket, contact 3D-P Support.

E-mail: support@3d-p.com

Phone - **Americas**: 1-800-955-9337

Phone - **Australia/Asia-Pacific**: 1800 210 655

Phone - **International Direct Dial**: +1

403 203 3018 http://www.3d-p.com

In order to expedite your request please provide as much information as possible, including:

- Product(s) or device(s) you are enquiring about (i.e., 3D-P Osprey IEP) Serial number(s) of affected products (if applicable)
- Firmware version(s) of affected products (if applicable) Install location(s) of affected products (if applicable)
- Description of the issue you are experiencing including any fault details and/or error messages Customer name and contact details

Once your e-mail or phone call is received you will receive an automatic confirmation e-mail along with your assigned ticket number. This is a unique number that is used to identify and track your request within the 3D-P Support system and should be used as the key reference for any communication surrounding the issue.

1. Osprey Intelligent Endpoint

3D-P's Intelligent Endpoint product line features the Osprey Intelligent Endpoint. The Osprey Intelligent Endpoints have several wireless radio variants.

1.1 Wireless Radio Options

- **LTE Only: OSP-R5Lxx**
  - OEM Integration of LTE Radio:
    - Transceiver #1 - LTE HW capable of the following bands[2]

RAT	Bands																								
	1	2	3	4	5	6	7	8	9	12	13	18	19	20	26	28	29	30	32	41	42	43	46	48	66
LTE[a]	F	F	F	F	F		F	F	F	F	F	F	F	F	F	F	F[b]	F[b]	F[b]	T	T	T	T[b]	T	F
UMTS[c]	Y	Y		Y	Y	Y		Y	Y				Y			N/A				N/A					
GNSS	• GPS: 1575.42 MHz • GLONASS: 1602 MHz • BeiDou: 1561.098 MHz • Galileo: 1575.42 MHz • QZSS: 1575.42 MHz																								

a. (LTE) Downlink MIMO support (2x2; 4x2)
F=FDD; T=TDD
Data rates: Downlink (Cat 12 with 3CA, 256QAM=600 Mbps; Cat 9 with 3CA, 64QAM=450 Mbps), Uplink (Cat 13 with 2CA contiguous, 64QAM=150 Mbps)
b. Downlink only
c. UMTS (DC-HSPA+, HSPA+, HSPA, UMTS)
Diversity support
Data rates: Downlink (Cat 24, up to 42 Mbps), Uplink (Cat 6, up to 5.76 Mbps)

    - LTE Smart antenna switching technology (Tx diversity for mining applications)
    - xx in the model number corresponds to four available regionalized settings for the LTE card:
      - 01 LTE radio configured for North American Bands
      - 02 LTE radio configured for Asia Pacific Bands
      - 03 LTE radio configured for EU Bands
      - 04 LTE radio configured for CBRS Band
  - OEM Integration of Garmin 15xL
    - Receiver - Low precision GPS

- **LTE + Rajant InstaMesh: OSP-R5LxxE25**
  - OEM Integration of LTE Radio:
    - Transceiver #1 - LTE HW capable of the following bands[3]

[2] From Sierra Wireless **Product Technical Specification (41110788 Rev 11)**
[3] From Sierra Wireless **Product Technical Specification (41110788 Rev 11)**

RAT	Bands																								
	1	2	3	4	5	6	7	8	9	12	13	18	19	20	26	28	29	30	32	41	42	43	46	48	66
LTE[a]	F	F	F	F	F		F	F	F	F	F	F	F	F	F	F	F[b]	F[b]	F[b]	T	T	T	T[b]	T	F
UMTS[c]	Y	Y		Y	Y	Y		Y	Y				Y			N/A				N/A					
GNSS	• GPS: 1575.42 MHz • GLONASS: 1602 MHz • BeiDou: 1561.098 MHz • Galileo: 1575.42 MHz • QZSS: 1575.42 MHz																								

a. (LTE) Downlink MIMO support (2x2; 4x2)
F=FDD; T=TDD
Data rates: Downlink (Cat 12 with 3CA, 256QAM=600 Mbps; Cat 9 with 3CA, 64QAM=450 Mbps), Uplink (Cat 13 with 2CA contiguous, 64QAM=150 Mbps)
b. Downlink only
c. UMTS (DC-HSPA+, HSPA+, HSPA, UMTS)
Diversity support
Data rates: Downlink (Cat 24, up to 42 Mbps), Uplink (Cat 6, up to 5.76 Mbps)

- LTE Smart antenna switching technology (Tx diversity for mining applications)
- xx in the model number corresponds to four available regionalized settings for the LTE card:
  - 01 LTE radio configured for North American Bands
  - 02 LTE radio configured for Asia Pacific Bands
  - 03 LTE radio configured for EU Bands
  - 04 LTE radio configured for CBRS Band

- OEM Integration of Rajant ES1 product
  - Transceiver #2 - 2.4 GHz, two antenna ports, (2x2 MIMO)
  - Transceiver #3 - 5 GHz, two antenna ports, (2x2 MIMO)
- OEM Integration of Garmin 15xL
  - Receiver - Low precision GPS

- **LTE + 802.11 a/b/g/n: OSP-R5LxxW04**
  - OEM Integration of LTE Radio:
    - Transceiver #1 - LTE HW capable of the following bands[4]

RAT	Bands																								
	1	2	3	4	5	6	7	8	9	12	13	18	19	20	26	28	29	30	32	41	42	43	46	48	66
LTE[a]	F	F	F	F	F		F	F	F	F	F	F	F	F	F	F	F[b]	F[b]	F[b]	T	T	T	T[b]	T	F
UMTS[c]	Y	Y		Y	Y	Y		Y	Y				Y			N/A				N/A					
GNSS	• GPS: 1575.42 MHz • GLONASS: 1602 MHz • BeiDou: 1561.098 MHz • Galileo: 1575.42 MHz • QZSS: 1575.42 MHz																								

a. (LTE) Downlink MIMO support (2x2; 4x2)
F=FDD; T=TDD
Data rates: Downlink (Cat 12 with 3CA, 256QAM=600 Mbps; Cat 9 with 3CA, 64QAM=450 Mbps), Uplink (Cat 13 with 2CA contiguous, 64QAM=150 Mbps)
b. Downlink only
c. UMTS (DC-HSPA+, HSPA+, HSPA, UMTS)
Diversity support
Data rates: Downlink (Cat 24, up to 42 Mbps), Uplink (Cat 6, up to 5.76 Mbps)

    - LTE Smart antenna switching technology (Tx diversity for mining applications)
    - xx in the model number corresponds to four available regionalized settings for the LTE card:
      - 01 LTE radio configured for North American Bands
      - 02 LTE radio configured for Asia Pacific Bands
      - 03 LTE radio configured for EU Bands
      - 04 LTE radio configured for CBRS Band
  - Standards-based dual-band 802.11a/b/g/n, available in single or dual radio configurations
    - Transceiver #2 - 2.4 GHz & 5 GHz two antenna ports, (2x2 MIMO)
  - OEM Integration of Garmin 15xL
    - Receiver - Low precision GPS

[4] From Sierra Wireless **Product Technical Specification (41110788 Rev 11)**

1.2 Connectors

An example connector layout for the Osprey is shown below. Different variants of the Osprey have different configurations for these connectors. A label is attached to each device to indicate the variant specific layout.

Figure 2: Osprey Connectors (LTE + Rajant option shown)

Figure 3: Osprey Connector Layout Label

1.2.1 Power & Comm Connector

The power and comms connector exposes power, USB, a RS-232 serial port (serial console), two 100 Mbps Ethernet ports, and a SIM interface. The external accessory cable is broken out using a CBL-R5PWR18 cable. The wiring and labeled breakouts are shown in the following schematic.

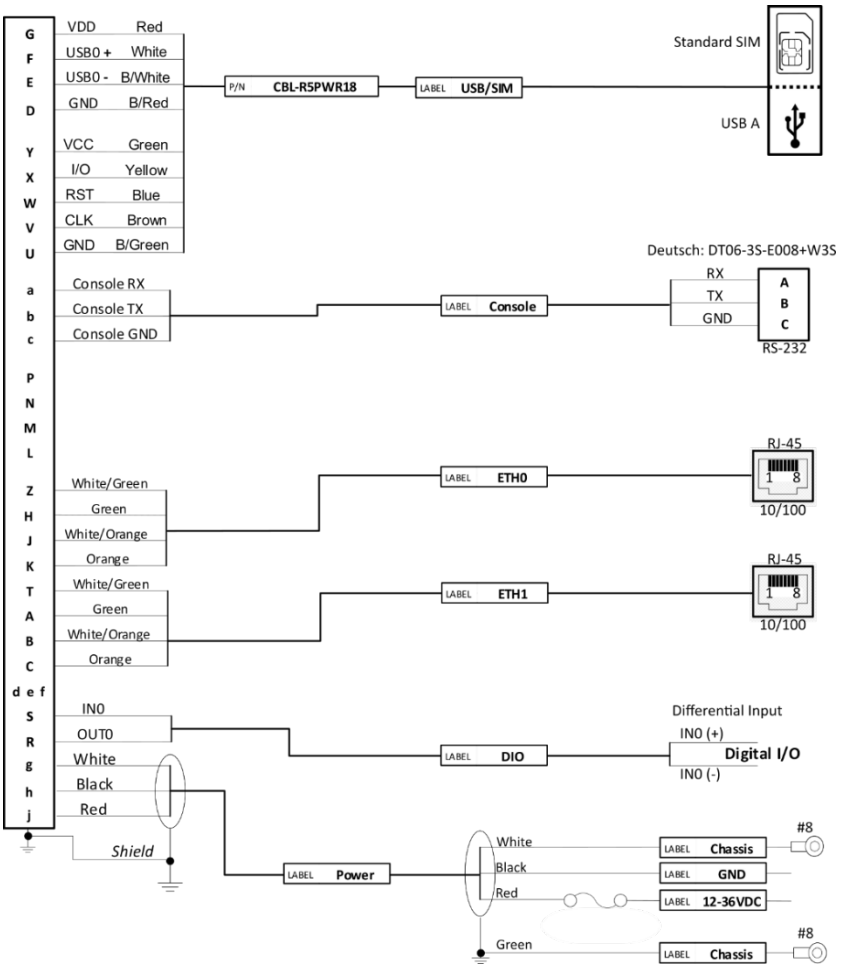

Figure 4: CBL-R5PWR18 Breakout Schematic

For users who prefer **DB9** terminated console connection, the CBL-R5DB9CONSOLE Deutsch to DB9 adapter cable accessory is available for purchase.

1.2.2 Radio Antenna Connectors

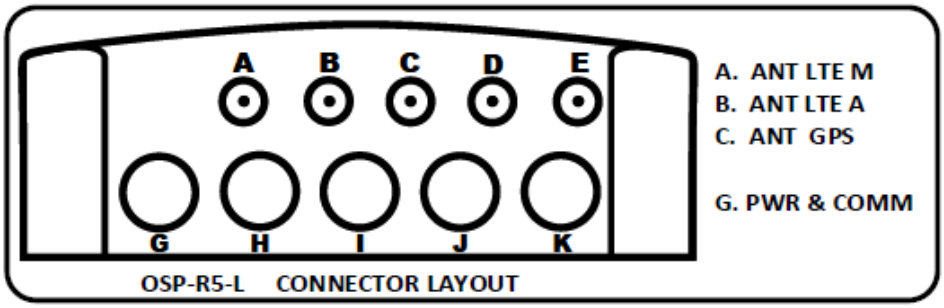

Figure 5: LTE Only Connector Layout

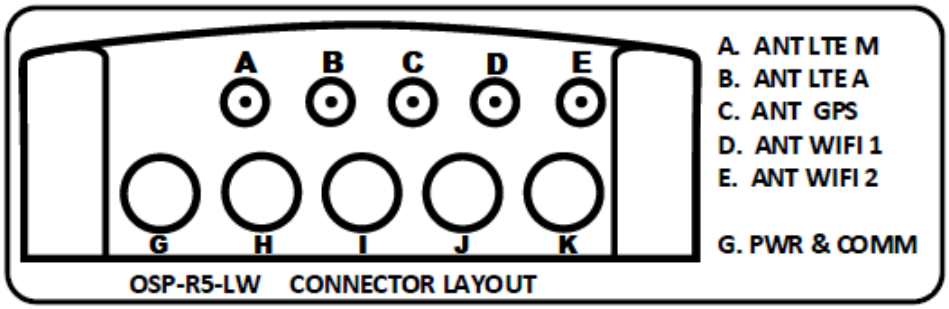

Figure 6: LTE + WiFi Connector Layout

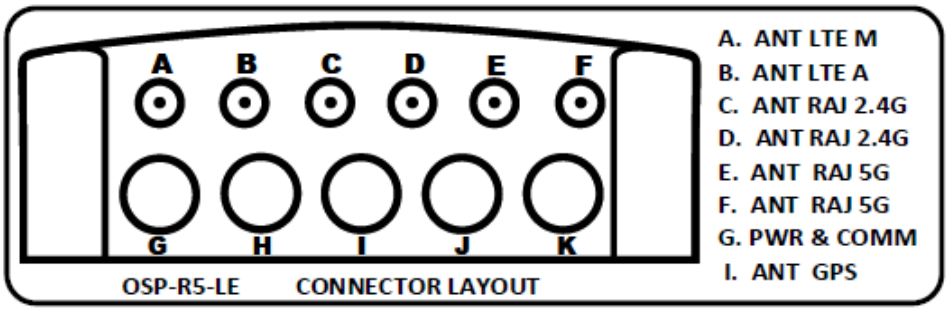

Figure 7: LTE + WiFi Connector Layout

The examples above indicate the antenna port and the associated technology (LTE, Rajant, or GPS). For the LTE ports, the main and diversity ports are also indicated. Typically, as part of the professional installation, plans are created that define how these ports are connected to the associated cabling and antennas for the specific installation location.

1.3 Approved Antennas for Unlicensed Bands

Due to regulatory requirements, **only approved antennas should be used** for the unlicensed 2.4 and 5 GHz bands. The substitution of other antennas may be permissible but depending on the characteristics of the substitute antennas, appropriate engineering, and testing. Certain changes may require regulatory filings. In addition, antenna separation requirements are mandated by the FCC (USA) and ISED (Canada) (see the Required Antenna Separation section for details).

1.4 LTE Antenna & EIRP Requirements

LTE capable Osprey devices utilize a Sierra Wireless LTE module. This module has specific requirements for the antennas. EIRP limits as well as antenna characteristics should be maintained when selecting appropriate antennas.

Table 1: LTE Antenna Gain and Collocated Radio Transmitter Specifications[5]

	Operating mode	Tx Freq Range (MHz)		Max Time-Avg Cond. Power (dBm)	Antenna Gain Limit (dBi)		EIRP Limits (dBm)
					Standalone	Collocated	
EM7565 Embedded Module	WCDMA Band 2, LTE B2	1850	1910	24	6	4	30
	WCDMA Band 4, LTE B4	1710	1755	24	6	4	30
	WCDMA Band 5, LTE B5	824	849	24	6	4	30
	LTE B7	2500	2570	23.8[a]	9	4	32.8
	LTE B12	699	716	24	6	4	30
	LTE B13	777	787	24	6	4	30
	LTE B26	814	849	24	6	4	30
	LTE B41	2496	2690	23.8[a]	9	4	32.8
	LTE B48[b]	3550	3700	23	0	0	23
	LTE B66	1710	1780	24	6	4	30
Collocated transmitters	WLAN 2.4 GHz	2400	2500				30
	WLAN 5 GHz	5150	5850				30
	BT	2400	2500				16
	WiGig	58320	62640				25

[5] Not all bands are available or certified in all regions. Consult 3D-P support for detailed information on LTE capabilities in specific regions. Requirements are from Sierra Wireless **Product Technical Specification (41110788 Rev 11)**

Table 2: Recommended LTE Main/Diversity Antenna Specifications[6]

Parameter	Requirements	Comments
Antenna system	(LTE) External multi-band 2x2 MIMO antenna system (Ant1/ Ant2) (3G) External multi-band antenna system with diversity (Ant1/Ant2)	-
Operating bands — Antenna 1	All supporting Tx and Rx frequency bands.	
Operating bands — Antenna 2	All supporting Rx frequency bands, plus GNSS frequency bands if Antenna 2 is used in shared Diversity/MIMO/GNSS mode.	
VSWR of Ant1 and Ant2	• < 2:1 (recommended) • < 3:1 (worst case)	On all bands including band edges
Total radiated efficiency of Ant1 and Ant2	> 50% on all bands	• Measured at the RF connector. • Includes mismatch losses, losses in the matching circuit, and antenna losses, excluding cable loss. • Sierra Wireless recommends using antenna efficiency as the primary parameter for evaluating the antenna system. • Peak gain is not a good indication of antenna performance when integrated with a host device (the antenna does not provide omni-directional gain patterns). • Peak gain can be affected by antenna size, location, design type, etc.—the antenna gain patterns remain fixed unless one or more of these parameters change.
Radiation patterns of Ant1 and Ant2	Nominally Omni-directional radiation pattern in azimuth plane.	
Envelope correlation coefficient between Ant1 and Ant2	• < 0.5 on Rx bands below 960 MHz • < 0.2 on Rx bands above 1.4 GHz	
Mean Effective Gain of Ant1 and Ant2 (MEG1, MEG2)	⍰ -3 dBi	
Ant1 and Ant2 Mean Effective Gain Imbalance I MEG1 / MEG2 I	< 2 dB for MIMO operation < 6 dB for diversity operation	
Maximum antenna gain	Must not exceed antenna gains due to RF exposure and ERP/ EIRP limits, as listed in the module's FCC grant.	
Isolation between Ant1 and Ant2 (S21)	> 10 dB	• If antennas can be moved, test all positions for both antennas. •Make sure all other wireless devices (Bluetooth or WLAN antennas, etc.) are turned OFF to avoid interference.
Power handling	• > 1 W	• Measure power endurance over 4 hours (estimated talk time) using a 1 W CW signal— set the CW test signal frequency to the middle of each supporting Tx band. • Visually inspect device to ensure there is no damage to the antenna structure and matching components. • VSWR/TIS/TRP measurements taken before and after this test must show similar results.

[6] From Sierra Wireless **AirPrime EM7565 Product Technical Specification (41110788 Rev 11)**

1.5 Doodle Labs WiFi Output Power and Antenna Requirements

Recommended antennas for both 2.4 GHz and 5 GHz are 3dBi dipole antennas. This gain value includes associated cable losses.

The approved output power and sensitivity is as follows:

Table 3: Tx and Rx Performance at 2.4 GHz

Tx/Rx Specification	Radio Modulation	Coding Rate	Combined Ports Tx Power (+2dB,-3dB)	Rx Sensitivity (Typ)
2.4 GHz (20 MHz Channel) – 11n models				
802.11b Single Stream, STBC	1 Mbps	CCK	27	-100
802.11g	64 QAM	3/4	22	-79
802.11n	BPSK	1/2	27	-93
802.11n	16 QAM	3/4	25	-81
802.11n	64 QAM	5/6	22	-74
2.4 GHz (40 MHz Channel) – 11n models				
802.11n	BPSK	1/2	27	-90
802.11n	16 QAM	3/4	25	-78
802.11n	64 QAM	5/6	22	-71

Table 4: Tx and Rx Performance at 5 GHz

Tx/Rx Specification	Radio Modulation	Coding Rate	Combined Ports Tx Power (+2dB,-3dB)	Rx Sensitivity (Typ)
5 GHz (20 MHz Channel) – 11n models				
802.11a, STBC	BPSK	1/2	25	-94
802.11a	64 QAM	3/4	20	-77
802.11n	BPSK	1/2	25	-95
802.11n	16 QAM	3/4	23	-82
802.11n	64 QAM	5/6	20	-75
5 GHz (40 MHz Channel) – 11n models				
802.11n	BPSK	1/2	25	-91
802.11n	16 QAM	3/4	23	-79
802.11n	64 QAM	5/6	20	-72

1.6 Rajant Output Power and Antenna Requirements

Recommended antennas for Rajant radios are as follows:

1) KMA-2400-5NM peak gain 5.0 dBi for 2.4 GHz band operation
2) KMA-5250-7NM peak gain 7.0 dBi for 5.150-5.250 GHz band operation[7]
3) KMA-5800-6NM peak gain 6.0 dBi for 5.8 GHz band operation

The approved output power settings are as follows:

Table 5: Tx Settings at 2.4 GHz

CH #	Center Frequency 20 MHz CH BW (MHz)	BCC PWR 20 MHz CH BW 802.11b	BCC PWR 20 MHz CH BW 802.11g	BCC PWR 20 MHz CH BW 802.11 n HT20	Center Frequency 40 MHz CH BW (MHz)	BCC PWR 40 MHz 802.11 n HT40+	BCC PWR 40 MHz 802.11 n HT40-
1	2412	16	13	13	2422	11	
2	2417	22	20	19	2427	14	
3	2422	22	20	19	2432	14	
4	2427	22	20	19	2437	14	
5	2432	22	20	19	2442	14	14
6	2437	22	20	19	2447	14	14
7	2442	22	20	19	2452	14	14
8	2447	22	20	19	2457	14	14
9	2452	22	20	19	2462	14	14
10	2457	22	20	19	2447		14
11	2462	15	15	15	2452		11
12	2467				2457		
13	2472				2462		

[7] HPOD licensed outdoor band in Canada. Please consult 3D-P for deployment guidance.

Table 6: Tx Settings at 5 GHz

CH#	Center Frequency 20 MHz CH BW (MHz)	BCC PWR 20 MHz CH PWR 802.11a	BCC PWR 20 MHz CH BW 802.11n HT20	Center Frequency 40 MHz CH BW (MHz)	BCC PWR 40 MHz CH BW 802.11n HT40+	BCC PWR 40 MHz CH BW 802.11n HT40-
36	5180	17	21	5190	18	
40	5200	17	21	5190		18
44	5220	17	21	5230	22	
48	5240	17	21	5230		22
52	5260			5270		
56	5280			5270		
60	5300			5310		
64	5320			5310		
100	5500			5510		
104	5520			5510		
108	5540			5550		
112	5560			5550		
116	5580			5590		
120	5600			5590		
124	5620			5630		
128	5640			5630		
132	5660			5670		
136	5680			5670		
140	5700					
149	5745	18	24	5755	23	
153	5765	18	24	5755		23
157	5785	18	24	5795	23	
161	5805	18	24	5795		23
165	5825	18	24			

1.7 LEDs

The Osprey features two LEDs. Depending on the selected wireless options, these LEDs provide different functions.

Figure 8: Top View of Osprey with LEDs shown

The two LEDs circled above are used to indicate power and device status. The indications are as follows:

- Left LED – Power indicator
  - Red indicates power
  - Absence of illumination indicates no power

- Right LED (Models that do not include Rajant)
  - Unused but hardware is capable of software customization (green LED)

- Right LED (Models that include Rajant) – Rajant connection indicator[8]

[8] Rajant_BreadCrumb_ES1_User_Guide_v11.21_Rev_C

Table 7: Rajant LED Feedback

Color	Status
White (red, green and blue LEDs together; may appear pale blue or pale green)	Powered on; start of boot process
Red-Blue-Green scrolling in succession	End of successful boot process
Solid Blue	Ready, but no connected Mesh peers (unit may have Ethernet peers)
Blinking Green	At least one connected Mesh peer; all peers are connected at less than 24 Mbps
Solid Green	At least one connected Mesh peer; one or more peers are connected at 24 Mbps or faster
Blinking Yellow (with short and long pauses between blinks)	Numeric warning code
Blinking Red (with short and long pauses between blinks)	Numeric error code
Blinking Yellow (blinking at an increasing rate)	BreadCrumb is in the process of installing firmware
All LED colors scrolling in rapid succession (with a short pause between every cycle)	Successful firmware installation; ready to reboot
All LED colors scrolling in rapid succession (with no pause)	Identify mode is ON

Appendix A : Physical Installation

This appendix covers basic installation information on mounting the Intelligent Endpoint as well as connecting power, data and antenna cables.

Each installation will vary depending on the type of equipment and the type of radio technology being used.

For more information on best practice, proper installation techniques and guidelines please refer to the document: *3D-P Intelligent Endpoint Installation Guidelines, Document Number 051612-01, Revision 1.4*.

A.1 Mounting

Mounting the Endpoint is done using a heavy duty, steel flanged bracket. The bracket is mounted to the base of the IEP using ¼" - 20 x ½" flat head screws supplied.

A.1.1 Dimensions

Once the bracket is mounted, the Endpoint should be secured to a rigid structure whereas the structure should not introduce additional vibration or shock. The flanged tabs on the bracket

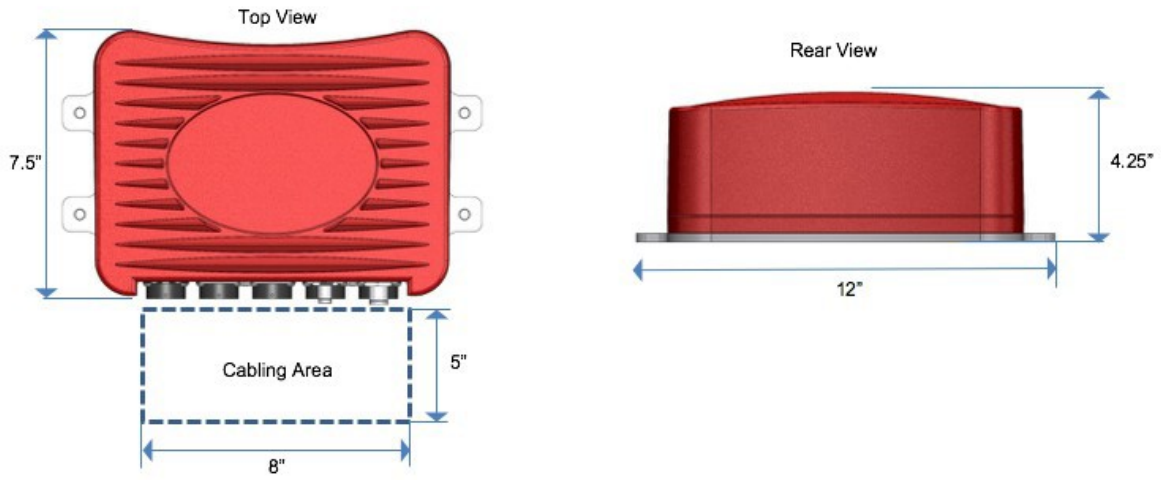

Figure 9: Relevant dimensions

accept ¼" bolts. Please take note of the required dimensions for mounting and allowances for cabling.

A.1.2 Mounting Plate Dimensions

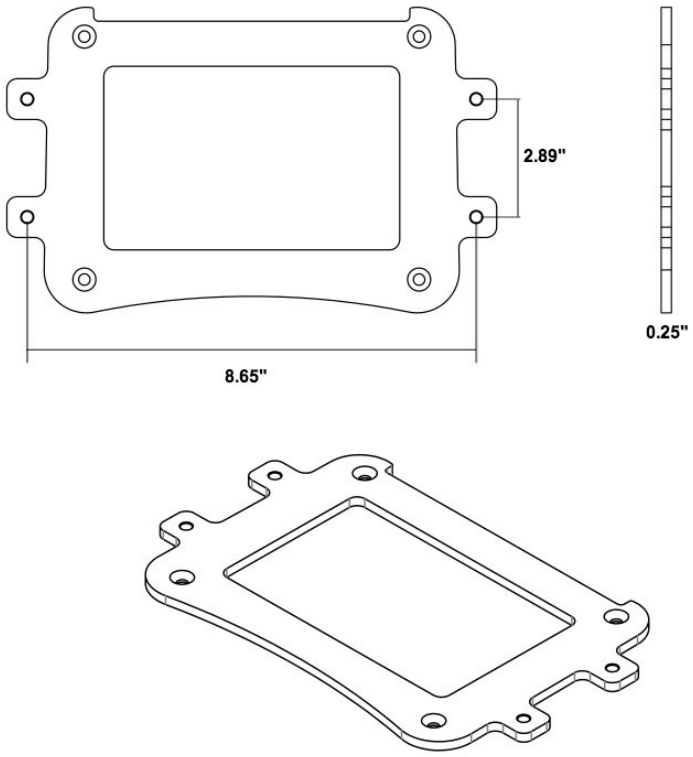

Figure 10: Mounting bracket dimensions

A.1.3 Equipment Location and Physical Mounting

Choosing an appropriate location for mounting an IEP is critical to the performance and survival of the unit. However, the requirements and considerations are relatively simple.

It is good practice where possible to obtain all components to be installed and interconnected and lay them out in order to plan the installation.

To minimize possible damage due to shock and vibration from mining equipment, the mounting location must have sufficient structural integrity to ensure the IEP is rigid in all three axes when bolted on. This means lightweight steel plate and enclosure surfaces such as Lids and Doors, while convenient are often not a good choice as they introduce 'trampolining' and 'extra oscillations.

The mounting method must incorporate all four mounting bolts.

The location ought to be readily accessible for servicing and troubleshooting.

Specifically, access is needed to the connections for integrity checks, and visibility of the LED indicators for troubleshooting. There must be enough space to allow cabling to be routed and connected without any stress on the connectors, and excessive bending or chaffing of the associated cabling.

Proximity to attached devices and the antennae are also important considerations. The first aim should be to limit the antenna's coaxial cable length. Excessive cable length leads to losses and reduced signal strength, which in turn results in significantly less operating range. Typically, the allowable cable lengths for serial and Ethernet connections to on-board systems and devices far exceed those of coax cable. With this in mind, locating the IEP as close as practical to the antennas should be the first priority.

Take Note:

IEP devices, particularly those with multiple embedded cards, can generate significant heat. Even in climates where operating temperatures remain below the max operating temperature of the IEP, best practices for installation would guide to installation inside the cab of the device, or at a minimum, protected from external heat sources. These best practices may lead to longer service life and better performance of the IEP.

A.2 Connecting Power

This section explains how to connect power to the Endpoint. It also covers explanation of grounding on mobile machinery and best practices for installation.

For more information on best practice, proper installation techniques and guidelines please refer to the document: *3D-P Intelligent Endpoint Installation Guidelines, Document Number 051612-01, Revision 1.4*.

A.2.1 Cable Connections

The device must be powered from a 3D-P power cable with an in-line weather-proof fuse holder.

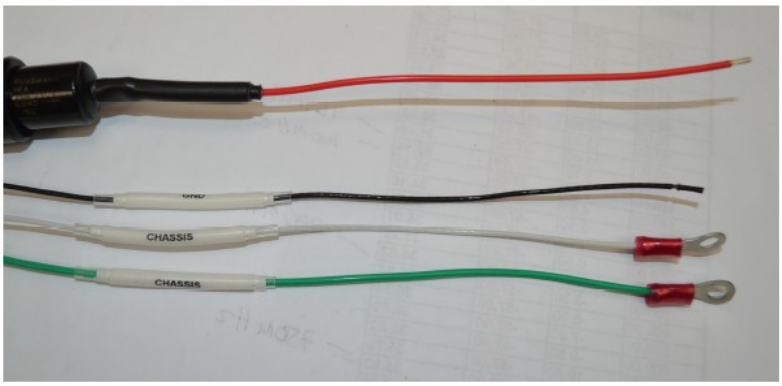

Figure 11: Cable termination

Use the following procedure to connect power to the Endpoint:

1. Connect the red wire to a DC voltage source (12-36VDC).
2. Connect the black wire to the (DC-) DC Voltage source (0VDC).
3. Connect the white wire to the DC Voltage source's chassis, or earth ground (#8 ring terminal).
4. Connect the green wire to the DC Voltage source's chassis, or earth ground (#8 ring terminal).

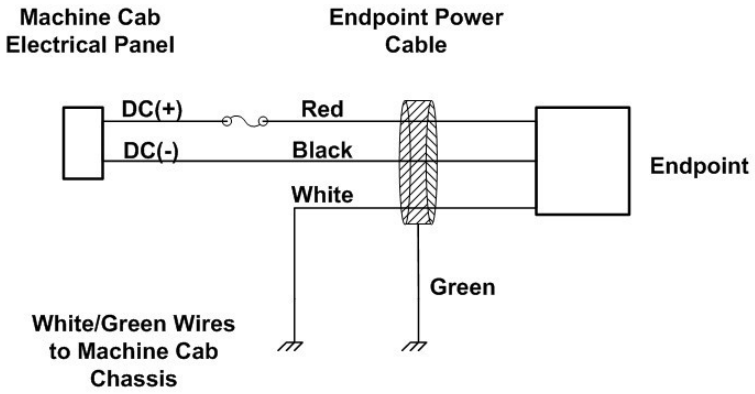

Figure 12: Cable connections

TOP TIP:

The white and green wires can be left disconnected for bench/pre-installation configuration.

A.2.2 Proper Grounding on Mobile Machinery

It is common for light and heavy duty mobile equipment that use DC voltage to be designed such that the DC Negative (DC-) of the battery bank is tied to the chassis, frame and other structural sub-components of the machine. This is known as a "grounded" system. Each of these structural sub-components that are bolted together, such as the machine frame, machine chassis, cab chassis, etc. are often not particularly good electrical conductors due to paint and corrosion.

In an attempt to ensure that the chassis of the machine is the same electrical potential across all of these sub-components, grounding straps are typically installed across each interface. The diagram below illustrates the resistances between each of the sub-components.

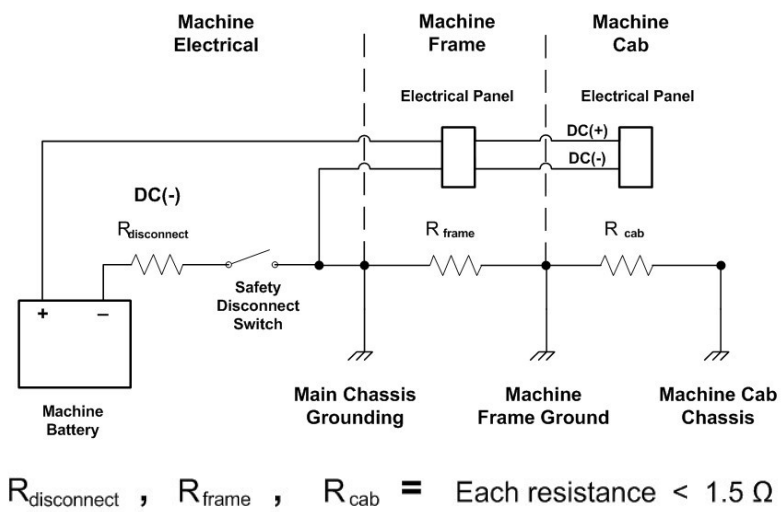

Figure 13: Machine grounding

The main objective of proper grounding is to ensure all chassis or grounding points on the machine are at the same potential as the battery negative. To accomplish this, 3D-P generally advises that each resistance between the sub-components be less than 1.5 ohms.

At the start of any installation it the grounding and chassis straps on each sub-component should be checked. This step is imperative. It must be verified that there is proper electrical bonding across the complete machine. Please refer to the document: *IEP Ground Troubleshooting Guide, 3D-P, Revision 1.1, 130906-01-BM* for further instructions on how to complete this task.

A.3 Radio Antenna Mounting

3D-P antennas come with 2” handrail/pole mounting brackets. Assembly of the antenna should not be performed without guidance from 3D-P’s Service team assisting with the installation. Factors including type of radio, location of installation, and type of application all play a part in the way each radio antenna should be installed.

Please consult this document for further information: *3D-P Intelligent Endpoint Installation Guidelines, Document Number 051612-01, Revision 1.4.*

A.3.1 Bracket Assembly

Following is a snapshot of the antenna bracket componentry:

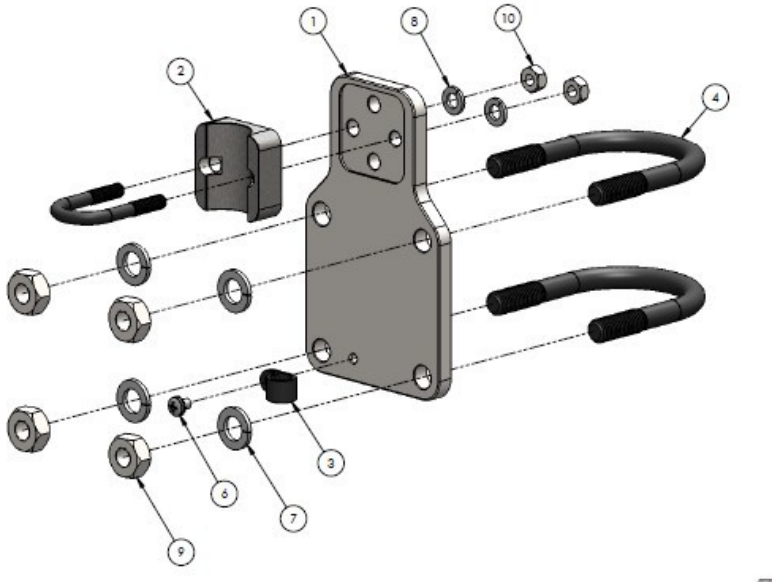

Figure 14: Bracket assembly

1. Antenna bracket
2. Antenna collar
3. Cable strain relief
4. U-bolt, M10, 2.0” OD X 2.88”
5. U-bolt, M6, 0.75” OD X 1.69
6. Screw, pan, 8-32x ¼ ”
7. Washer, lock, spring, M10
8. Washer, lock, spring, M6
9. Nut, hex, M6
10. Nut, hex, M10

A.3.2 Installation

An installed antenna is shown below. This is a common installation on a 2” handrail.

Figure 15: Handrail Mounting Example

A.4 GPS Antenna Mounting

3D-P’s GPS antenna also comes with 2” hand rail/pole mounting brackets. Assembly of the antenna should not be performed without guidance from 3D-P’s Services team.

Please consult this document for further information: *3D-P Intelligent Endpoint Installation Guidelines”, Document Number 051612-01, Revision 1.4.*

A.4.1 Bracket Assembly

The ANT-WS3977 antenna is mounted onto a steel, vertical mounting bracket designed for mounting to a 2” handrail.

Figure 16: Bracket Assembly

A.5 Antenna Connection and Weatherproofing

All RF connectors must be properly installed to prevent damage and water intrusion that can enter through the cable jacket. Proper installation of RF connectors includes hand tightening (no tools should be used), and utilization of self-fusing, butyl tape (known as splicing tape) to protect the connection from harsh environments and vibration.

Follow this procedure for proper installation of RF cabling onto any Endpoint, piece of infrastructure or 3D-P and other bulkhead style antennas.

This procedure uses the 3D-P 3dBi Omni Antenna as an example.

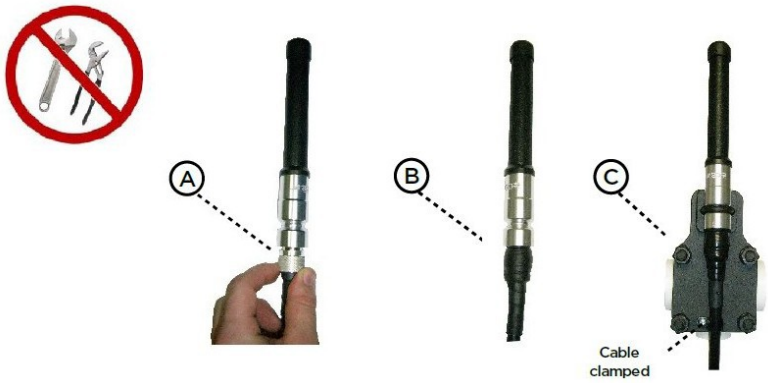

Figure 17: Antenna Weather Proofing

1. Tighten antenna connection by hand only. Do not tighten with any tool.
2. Wrap the entire connection twice with the Plymouth Phillips 122, butyl splicing tape. The tape must be stretched during wrapping, activating the self-fusing aspect of the tape. Be sure to allow a significant overlap of each turn.
3. Install the antenna as shown above. This antenna is vertically oriented to make use of the cable clamp. The antenna can be rotated 90 degrees if needed. Additionally, in certain situations the bracket can also be rotated and mounted on a vertical pipe. Be sure to use the included lockwashers when attaching the nuts on each u-bolt.

TOP TIP:

It's also to best to wrap the tape up to connector, or the opposite way of intended water flow. This is done to prevent the rubber tape from wicking water in. Do this for each tape layer where possible. On the last turn don't pull the tape hard, just leave it loose and press it down. This will help prevent it from unwrapping.

Appendix B : Connectivity via COM Port

3D-P recommends the use of a console application such as PuTTY (free) or SecureCRT (paid) to connect to the console port on the Osprey Intelligent Endpoint. The settings for a console connection are:

Setting	Value
Baud rate	38400
Data bits	8
Parity	none
Stop bits	1
RTS/CTS	off
XON/XOFF	off

Appendix C : Connectivity via Recovery IP

All Ospreys offer a **Recovery IP** (192.168.77.77/24), available as a secondary IP address on eif0 (also labelled eth0), the first Ethernet interface.

To connect, set the ethernet card in your laptop/desktop to use the following details:

Setting	Value
IP Address:	192.168.77.78
Subnet	255.255.255.0

TOP TIP:

Any IP address can be used in the that subnet, with the obvious exceptions of:

192.168.77.0, 192.168.77.77, 192.168.77.255

A default gateway is not required for this connection.

Connecting using the Recovery IP gives web-based GUI access to an onboard web interface. Open a browser (Firefox, Chrome, Safari supported) and browse to:

http://192.168.77.77

For more information on device software features & login information refer to the Ties system user guide

Appendix D : Additional Information

For more information on this Configuration Guide or other 3D-P User Guides and documents, please contact support@3d- p.com.

3D-P offers training on all their products by radio type, in multiple tiers based on skill level. For information about 3D-P's training products, including course outlines, availabilities and the **3D-P Certified Technician** program, please contact training@3d-p.com.