Sonnoc

# Laser Projector User Manual

# safety instructions

Before using a laser projector (hereafter referred to as a projector), please read all these instructions and keep them in a safe place for future reference.

1. Read the instructions Before using the equipment, you should read all safety and usage instructions.

2. Cautions and warnings All cautions and warnings in the instructions for use should be followed.

3. Cleaning Before cleaning, unplug the power cord of the projector from the wall outlet. Use a damp cloth to wipe the projector case. Do not use liquid or aerosol cleaners.

4. Accessories Never place the projector on an unstable cart, shelf or table. The product may fall and cause serious damage. Keep the plastic packaging materials (projector, accessories, and optional accessories) out of the reach of children, otherwise the packaging bag may cause suffocation. Pay special attention to infants and young children.

5. Ventilation This projector is equipped with air intake and exhaust vents. Do not block these openings or place any objects near the openings. Otherwise, heat may accumulate inside and cause deterioration of the picture quality or damage to the projector.

6. Power supply Make sure that the operating voltage of the machine is the same as the voltage of your local power supply.

7. Repairs Do not attempt to repair this projector yourself. Entrust professional technicians to carry out maintenance.

8. Replacement parts When replacement parts are required, be sure to use replacement parts specified by the manufacturer. Unauthorized replacement may cause fire, electric shock, or other hazards.

9. Moisture condensation After moving the projector from a cold place to a warm place, do not use it immediately. When the projector experiences this temperature change, moisture may condense on the lens and key internal parts. To prevent damage to the projector, when the temperature changes suddenly or suddenly, wait at least 2 hours before using it.

# Precautions for AC power cord

The AC power cord must meet the relevant requirements of the country where you are using this projector. Please refer to the figure below to confirm the type of AC power cord plug you are using, and to ensure that the correct AC power cord is used. If the supplied AC power cord is not suitable for the AC outlet you are using, please consult your dealer. This projector is equipped with a grounded AC power cord plug. Make sure that the plug can be inserted into the power outlet. Do not destroy the safety function of this grounded plug. To prevent signal interference due to voltage fluctuations, we strongly recommend that you also equip the video source device with a grounded AC power cord plug.

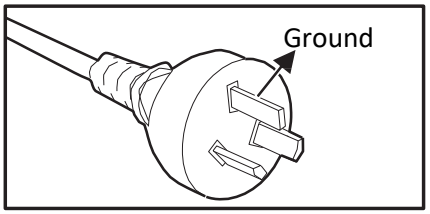


Australia and Mainland China

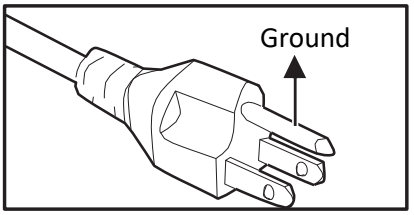


United States and Canada

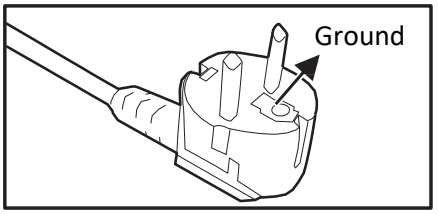


Continental Europe

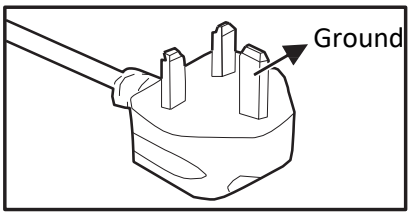


United Kingdom

# Disclaimer

All rights reserved

The ownership of all software and hardware of this product belongs to our company. Without our permission, we shall not copy, copy or extract at will
Or translation.
This user manual does not have any form of guarantee, expression of position or other hints. If there is any direct or indirect data loss or loss of profits caused by this user manual or all information of the products mentioned
Or the business is terminated, the company and its employees will not assume any responsibility for it.
The product specifications and information mentioned in this user manual are for reference only, and the content will change with the product changes. The user is mainly based on the actual product without prior notice.
All parts of this user manual include hardware and software. If there are any errors, the company is not obliged to bear any responsibility for them.
The product names discussed in this user manual are for identification purposes only, and these names may be registered trademarks of third-party companies or copyrighted by third-party companies.
Our company does its best to provide users with accurate document information, but since the product has been updated, it reserves the right to change without notice.

# Introduction

## Projector features

This projector integrates high-performance optical engine projection technology and user-friendly design, with high reliability and easy to use.

This projector has the following characteristics:

- The color mode provides different options designed specifically for different projector purposes.
- D-Sub 15-pin terminal can be connected to analog video
- Equipped with HDMI connection, supports HDCP
- Digital keystone distortion correction can correct distorted images
- RS-232 interface supports serial control
- Support 3D function
- Color management can adjust the color according to your preferences
- Can switch to normal and economy mode to reduce power consumption
- Less than 0.5W power consumption after power saving mode is turned on

# Item list

When unpacking the projector, make sure the following items are complete：

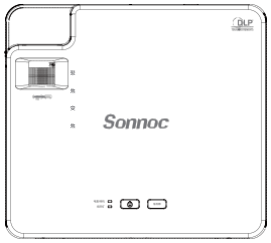


Projector

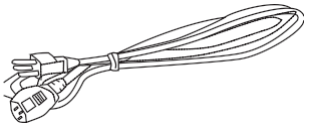

power cable

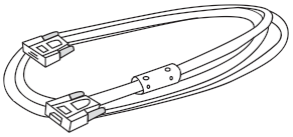

VGASignal line

Warranty Card

Quick User Guide

Three high service card

# Product Overview

## Projector appearance

### Front and top

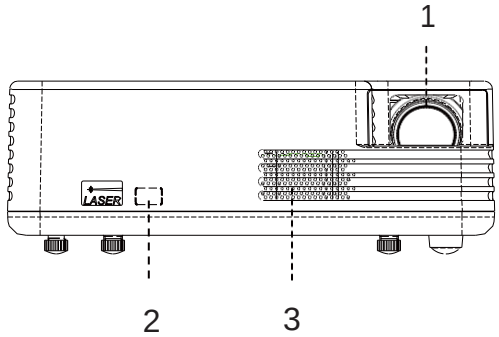


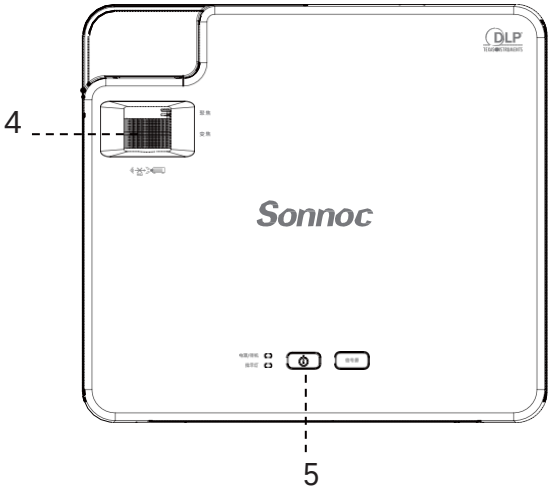


1. Lens
4. Focus adjustment lever

2. Infrared remote control sensor
5. control panel

3. Speakers (Only FHD models have configuration speakers)

### Bottom, side

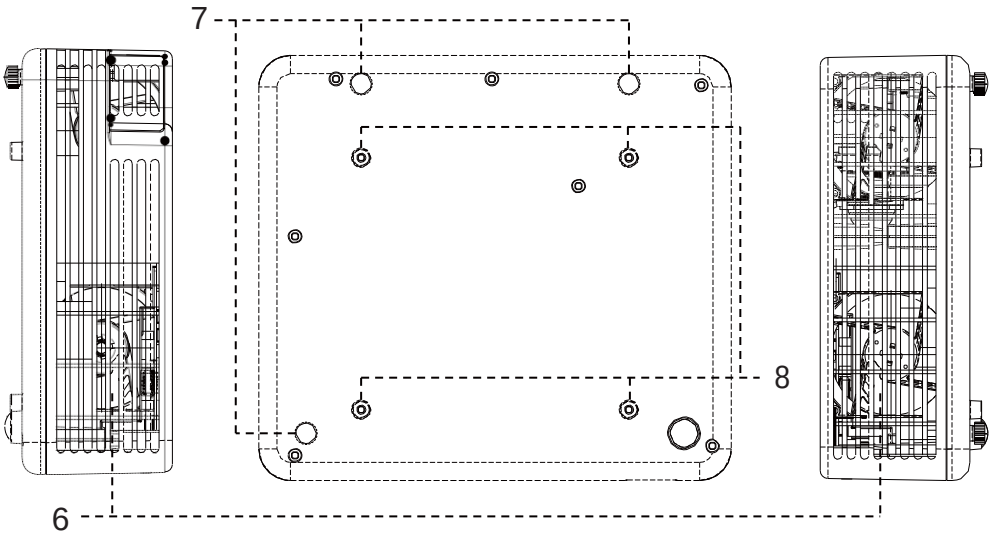


6. Vents

7. Adjust feet

8. Ceiling mounting holes

back

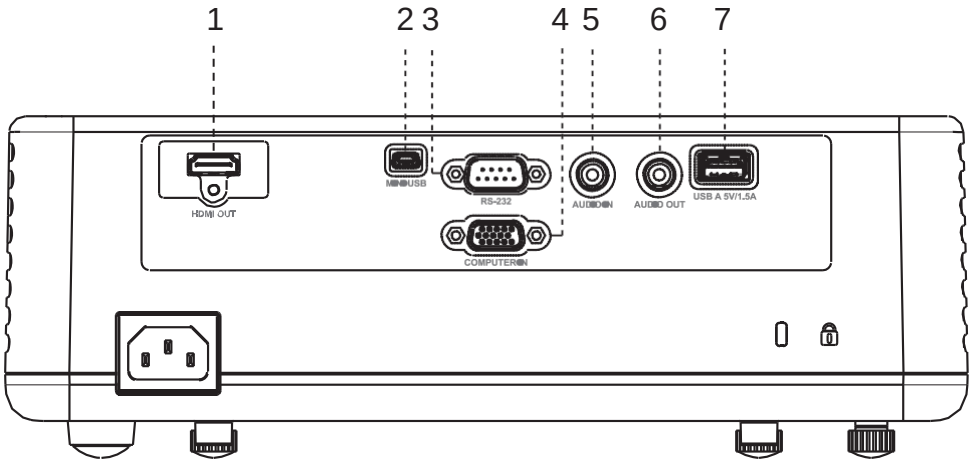


1.HDMI OUT

2.MINI USB

3.RS-232

4.COMPUTER IN

5.AUDIO IN

6.AUDIO OUT

7.USB A 5V/1.5A

# installation

## Connect the projector

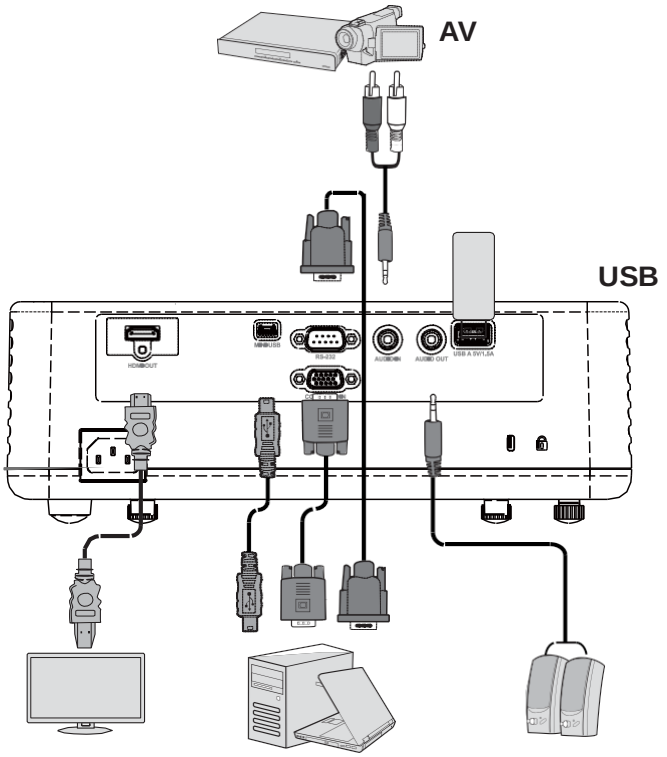


HDMI OUT only FHD

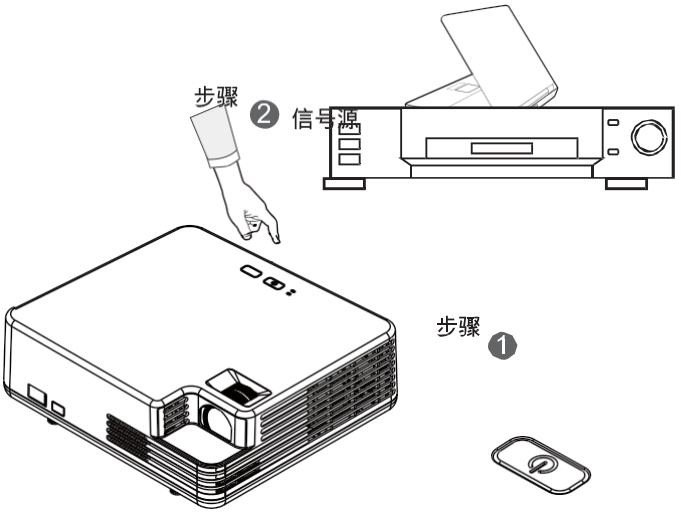

Adjust the height of the projector

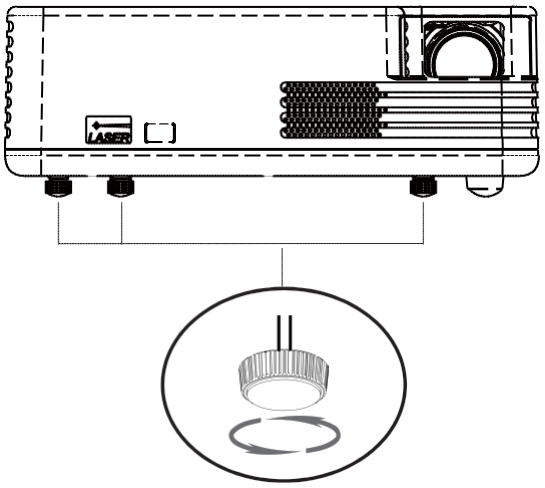


This projector is equipped with 3 adjusting feet for adjusting the image height. To raise or lower the image, you can turn the elevator feet to fine-tune the height。

☞

- To avoid damage to the projector, make sure that the adjustment feet are fully retracted before placing the projector in the packing box.

# Adjust the projector focus

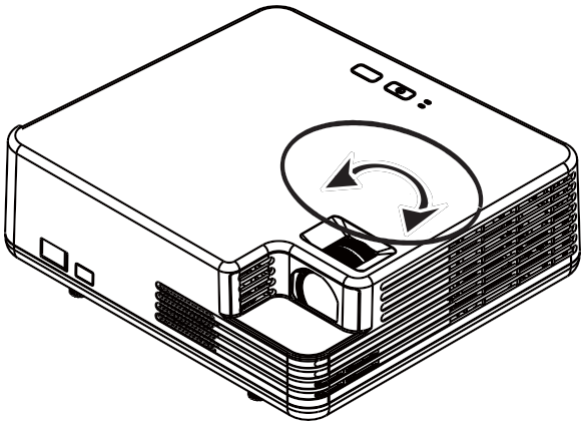

To focus the image, turn the focus adjustment (ring) until the image is clear.

# Adjust the projected image size

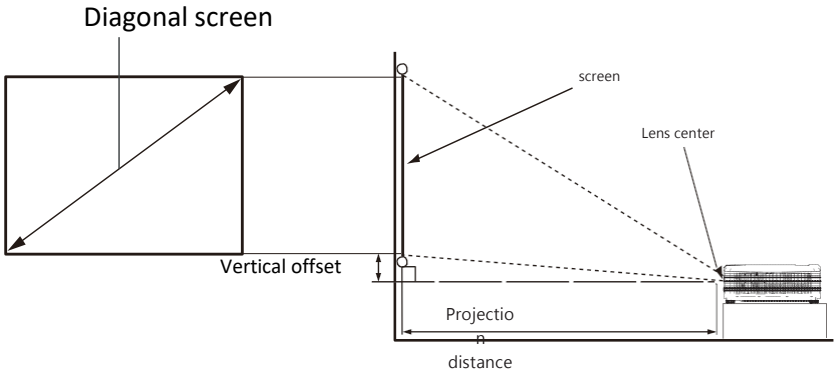


## XGA

| 4 : 3 | | | | |
|---|---|---|---|---|
| screen size | | | Projection distance [ 英寸 (mm)] | Vertical offset [ 英寸 (mm)] |
| [ 英寸 (mm)] | [ 英寸 (mm)] | [ 英寸 (mm)] | | |
| 50(1270) | 40(1016) | 30(762) | 77(1956) | 3.8(96) |
| 60(1524) | 48(1219) | 36(914) | 93(2362) | 4.5(115) |
| 70(1778) | 56(1422) | 42(1067) | 109(2769) | 5.3(134) |
| 80(2032) | 64(1626) | 48(1219) | 125(3175) | 6.0(154) |
| 90(2286) | 72(1829) | 54(1372) | 141(3581) | 6.8(173) |
| 100(2540) | 80(2032) | 60(1524) | 156(3962) | 7.6(192) |
| 120(3048) | 96(2438) | 72(1829) | 188(4775) | 9.1(230) |
| 140(3556) | 112(2845) | 84(2134) | 220(5588) | 10.6(269) |
| 150(3810) | 120(3048) | 90(2286) | 236(5994) | 11.3(288) |

## WXGA/1080P

| 16 : 9 | | | | |
|---|---|---|---|---|
| screen size | | | Projection distance [ 英寸 (mm)] | Vertical offset [ 英寸 (mm)] |
| [ 英寸 (mm)] | [ 英寸 (mm)] | [ 英寸 (mm)] | | |
| 50(1270) | 43.6(1107) | 24.5(622) | 67(1702) | 3.9(99) |
| 60(1524) | 52.3(1328) | 29.4(747) | 80(2032) | 4.7(119) |
| 70(1778) | 61.0(1549) | 34.3(871) | 93(2362) | 5.5(140) |
| 80(2032) | 69.7(1770) | 39.2(996) | 106(2692) | 6.3(160) |
| 90(2286) | 78.4(1991) | 44.1(1120) | 119(3023) | 7.1(180) |
| 100(2540) | 87.2(2215) | 49.0(1245) | 132(3353) | 7.9(201) |
| 120(3048) | 104.6(2657) | 58.8(1494) | 158(4013) | 9.4(239) |
| 150(3810) | 130.7(3320) | 73.5(1867) | 198(5029) | 11.8(300) |
| 200(5080) | 174.3(4427) | 98.1(2492) | 263(6680) | 15.7(399) |

The above table is for user reference only

# control panel

# Control panel and remote control

Power
Turn the projector on or off

signal source
Search signal source

# Install the battery

1. Open the battery cover in the direction shown。

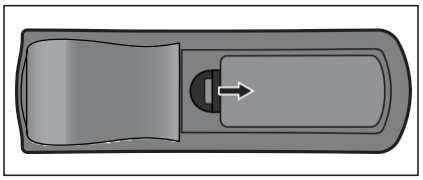

2. Insert the battery according to the icon in the compartment。

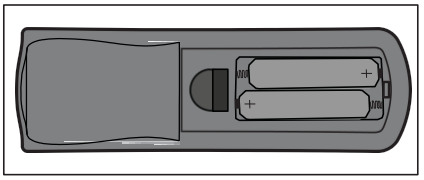

3. Replace the battery cover。

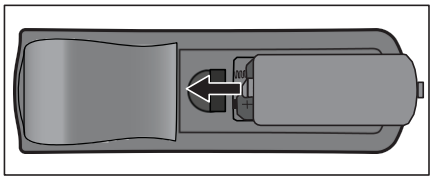

⚠

- There is a danger of explosion if the battery type used when replacing the battery is incorrect.
- Dispose of used batteries according to relevant instructions。
- When loading the battery, make sure that the positive and negative poles are facing correctly。

☞

- Keep the battery out of the reach of children。
- When not using for a long time, remove the remote control battery。
- Do not charge the battery or throw the battery into fire or water。
- Do not dispose of used battery household waste together. Dispose of used batteries in accordance with local regulations。
- If the battery is not replaced properly, there is a danger of explosion. Only use the same type of battery recommended by the manufacturer when replacing。
- The battery should be stored in a cool, dry place and protected from light, away from fire and water。
- If the battery shows signs of leakage, wipe the leakage and replace it with a new battery. If the leakage adheres to the body or clothing, immediately rinse with water。

# Remote control operation

Point the remote control at the infrared remote sensor and press the button。

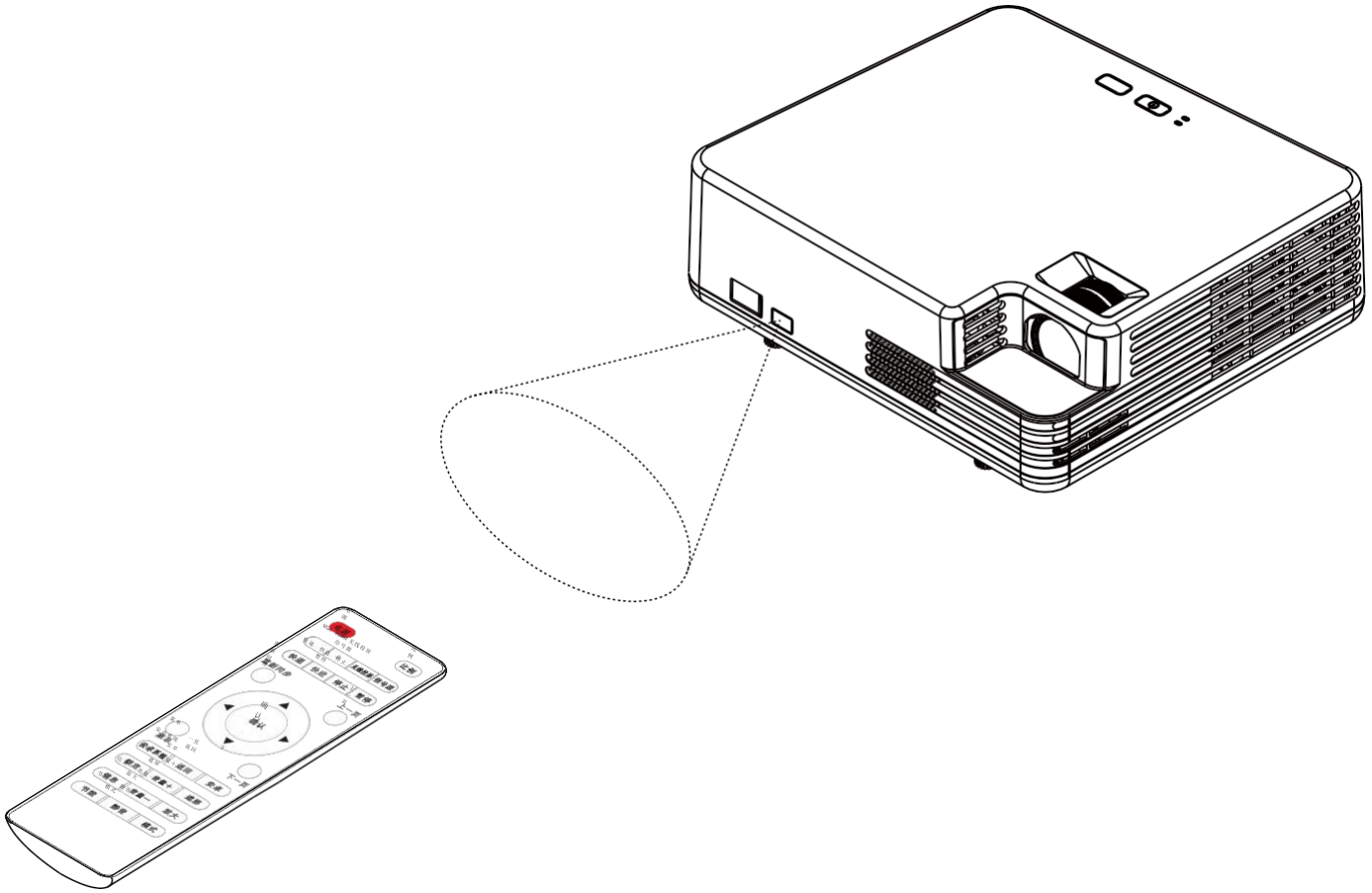

☞

- The remote control may not work when other strong light sources such as sunlight or fluorescent lights shine on the remote control sensor。
- Operate the remote control where you can see the remote sensor。
- Do not shake or drop the remote control。
- Store the remote control in a cool and dry place。
- Do not splash water on the remote control or place wet objects on it。
- Do not disassemble the remote control。

# Dimensions

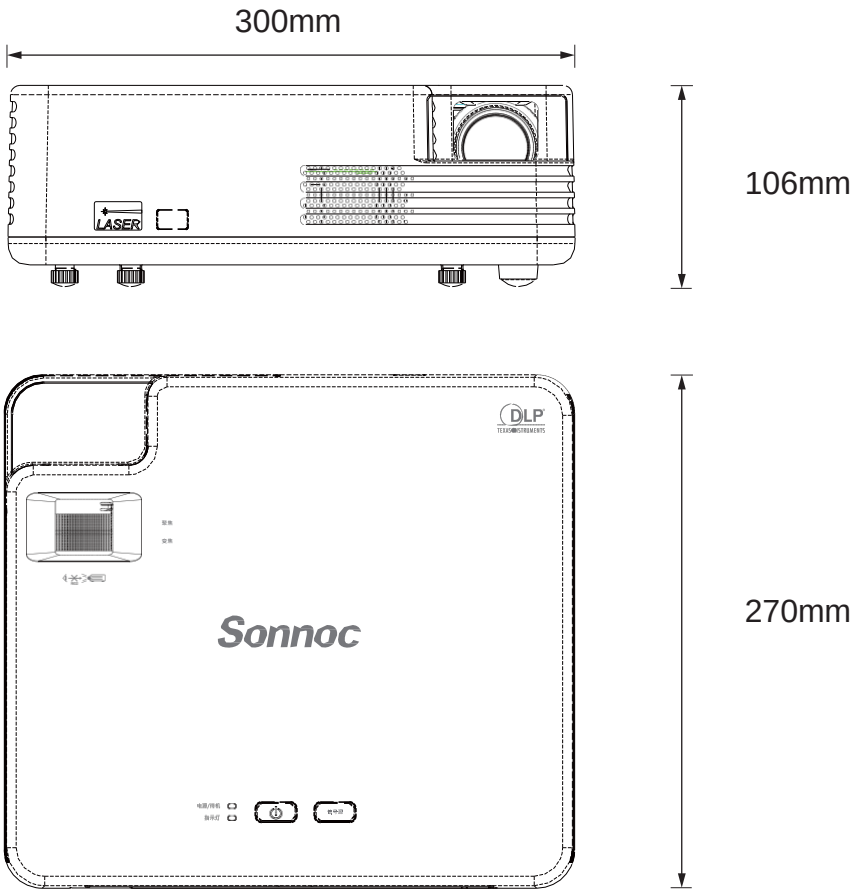


# Ceiling installation

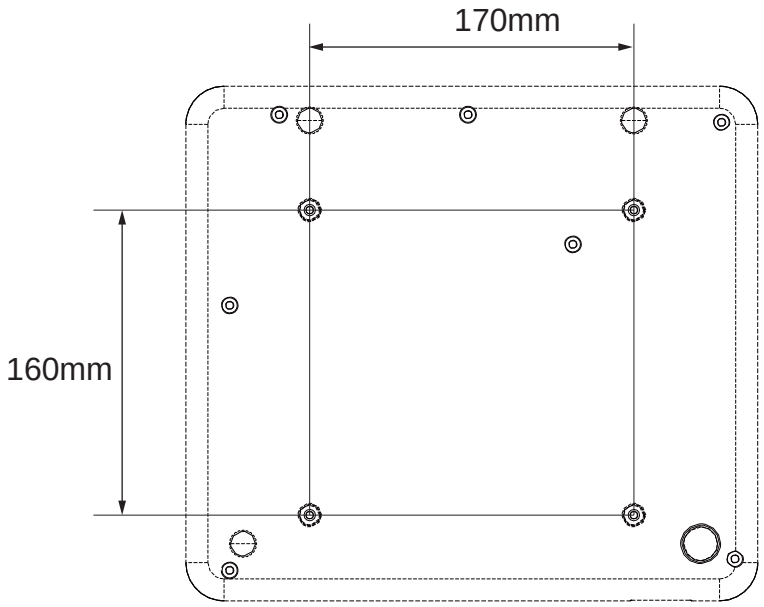


Note: It is recommended to use M4L8 screws for fixing projectors that use ceiling-mounted M4 screw holes. (M4/ L7 x 4)

# Specification

DLP Laser Projector

Model: SNP-LW3600W

Input: 100-240V~, 50/60Hz, 3.5A

## Laser Safety

- IEC 60825-1
- IEC 62471
- FDA CDRH CFR 1040.10
- FDA CDRH CFR 1040.11

Manufacturer:

Sonnoc (Beijing) Technology Co., Ltd.

Address:  806, 7th Floor, No 5, No 26, Huangsi Street, Xicheng District, 100120 Beijing, P.R. China.

**FCC Statement**

This equipment has been tested and found to comply with the limits for a Class B digital device, pursuant to part 15 of the FCC rules. These limits are designed to provide reasonable protection against harmful interference in a residential installation. This equipment generates, uses and can radiate radio frequency energy and, if not installed and used in accordance with the instructions, may cause harmful interference to radio communications. However, there is no guarantee that interference will not occur in a particular installation. If this equipment does cause harmful interference to radio or television reception, which can be determined by turning the equipment off and on, the user is encouraged to try to correct the interference by one or more of the following measures:

-Reorient or relocate the receiving antenna.

-Increase the separation between the equipment and receiver.

-Connect the equipment into an outlet on a circuit different from that to which the receiver is connected.

-Consult the dealer or an experienced radio/TV technician for help.

To assure continued compliance, any changes or modifications not expressly approved by the party.

Responsible for compliance could void the user's authority to operate this equipment. (Example- use only shielded interface cables when connecting to computer or peripheral devices).

This equipment complies with Part 15 of the FCC Rules. Operation is subject to the following two conditions:

(1) This device may not cause harmful interference, and

(2) This device must accept any interference received, including interference that may cause undesired operation.

FCC Radiation Exposure Statement:

The equipment complies with FCC Radiation exposure limits set forth for uncontrolled enviroment. This equipment should be installed and operated with minimum distance 20cm between the radiator and your body.

.