VANTAGE WIRELESS CHARGER VAN-W4F-5W/LI

MOUNTING INSTRUCTION "CONCEALED FURNITURE"

VAN-W4F-5W/LI+VAN-USB-C-W4F-5W01/LI+VAN-050250PS-A

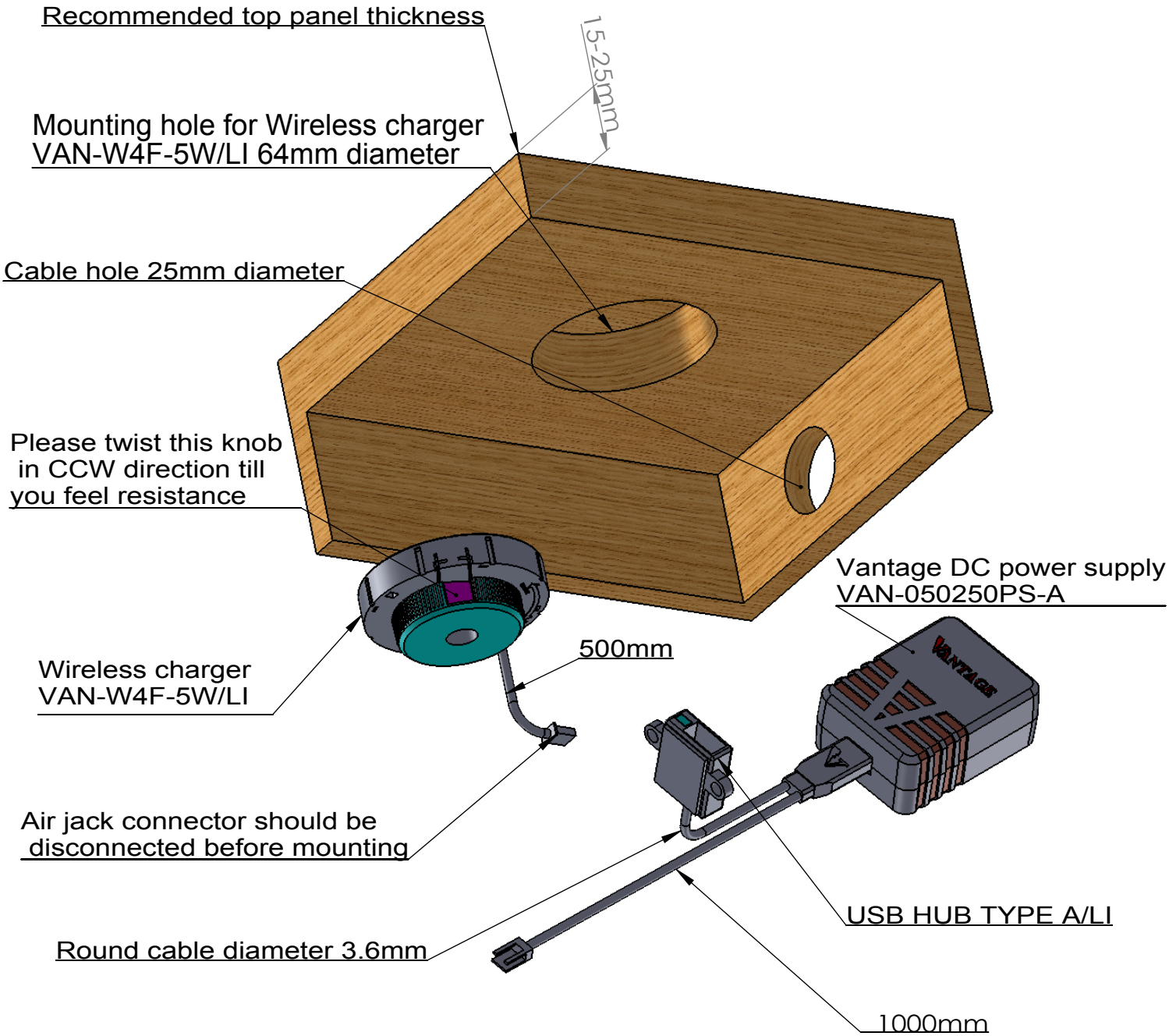

Step 1

VANTAGE WIRELESS CHARGER VAN-W4F-5W/LI

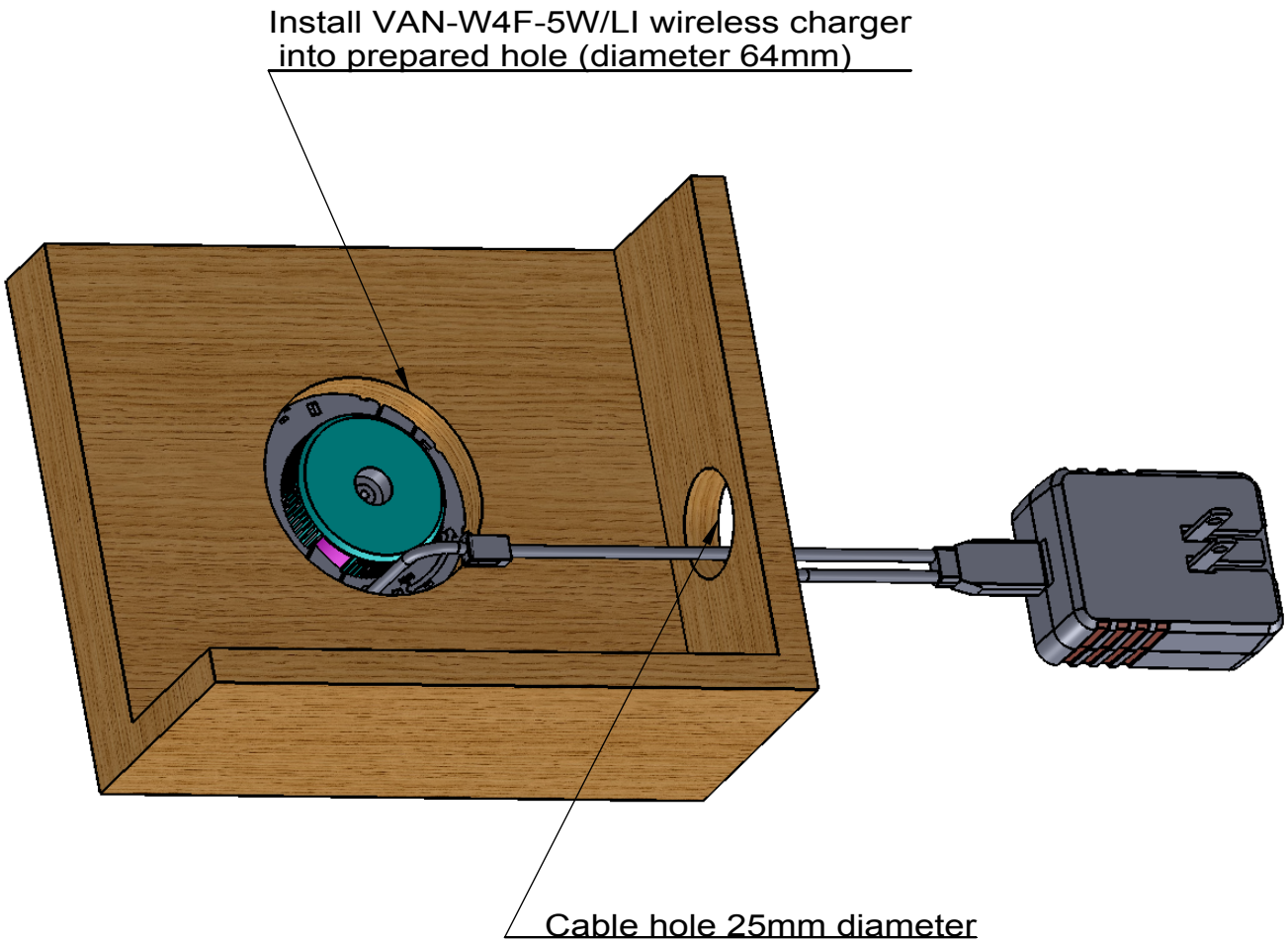

Step 2

VANTAGE WIRELESS CHARGER VAN-W4F-5W/LI

If wireless charger device fits properly to the hole and you feel that device can not be pushed deeper pease twist this part in CW direction to lock

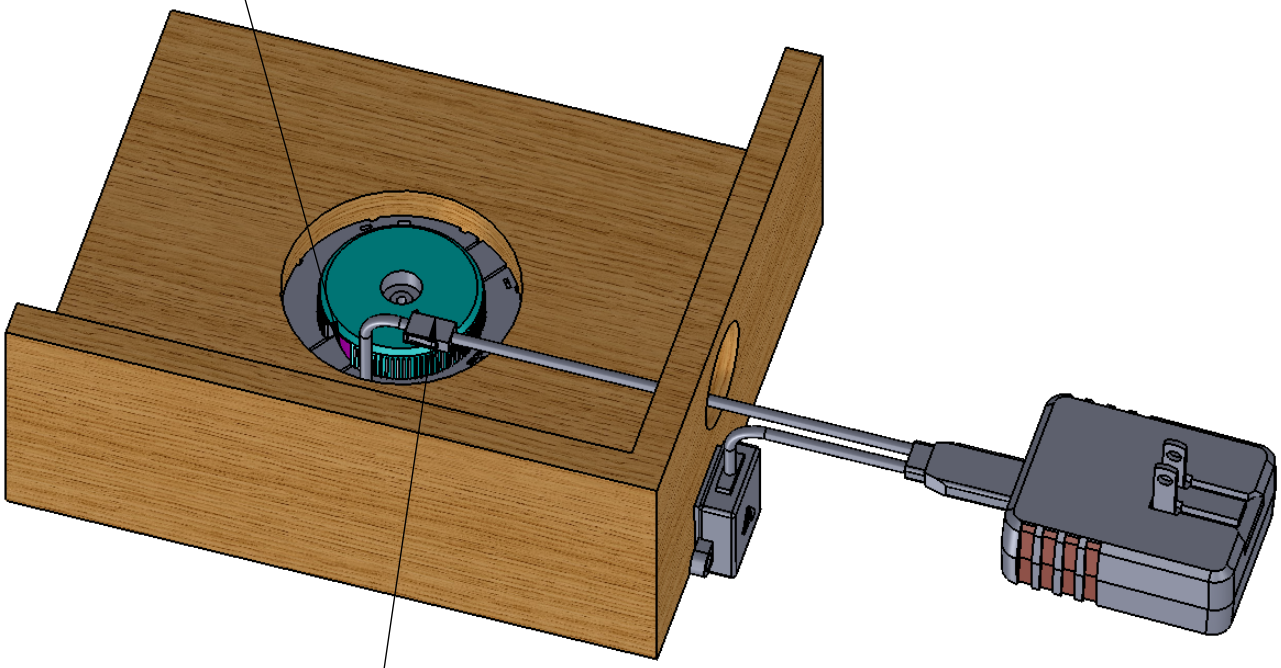

Connect air jack connector after mounting in furniture

Step 3

VANTAGE WIRELESS CHARGER VAN-W4F-5W/L

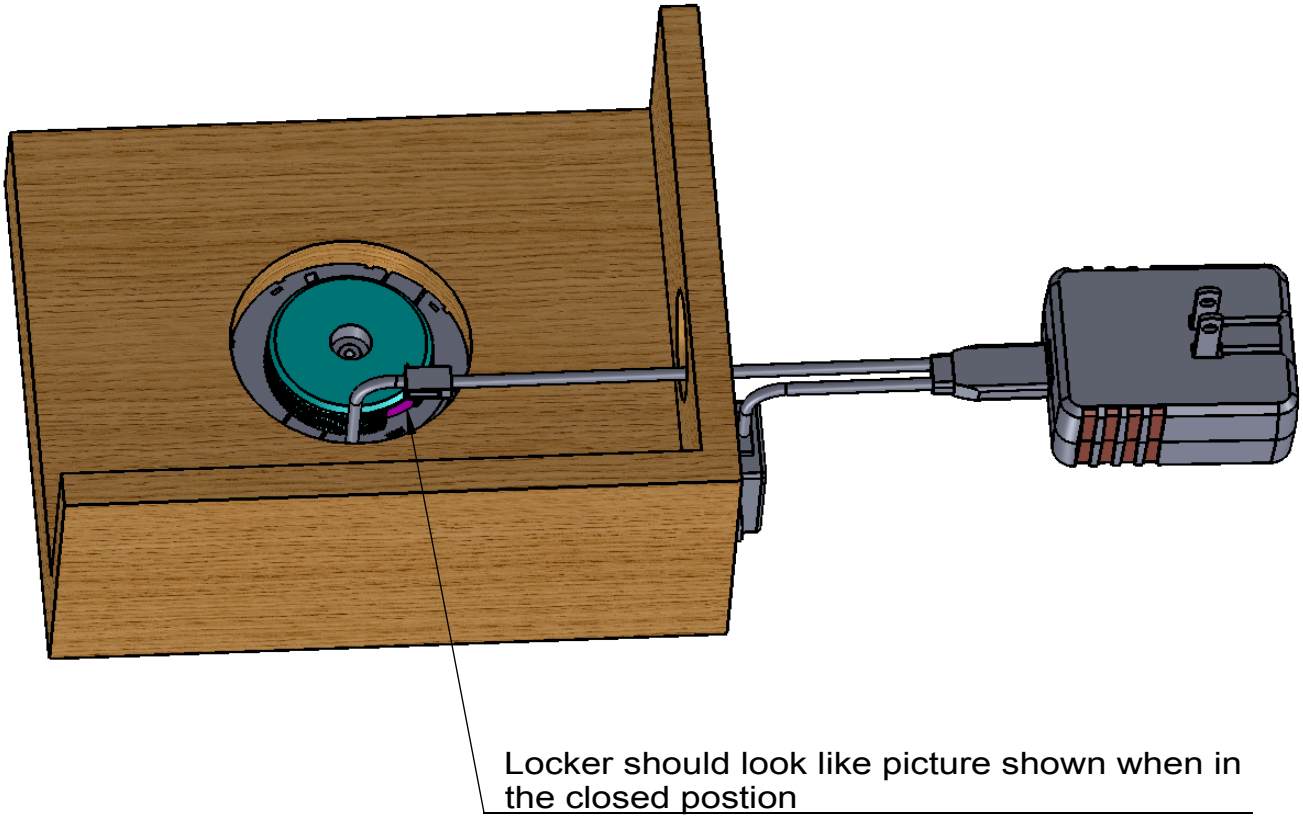

Step 4

VANTAGE WIRELESS CHARGER VAN-W4F-5W/LI

Light description:
-One blink at power on
-Constant blinking when Wireless charger is charging phone
-The blue light disappears when phone is charged fully
-Constant blinking-error

Mounted properly Vantage wireless charger VAN-W4F-5W/LI

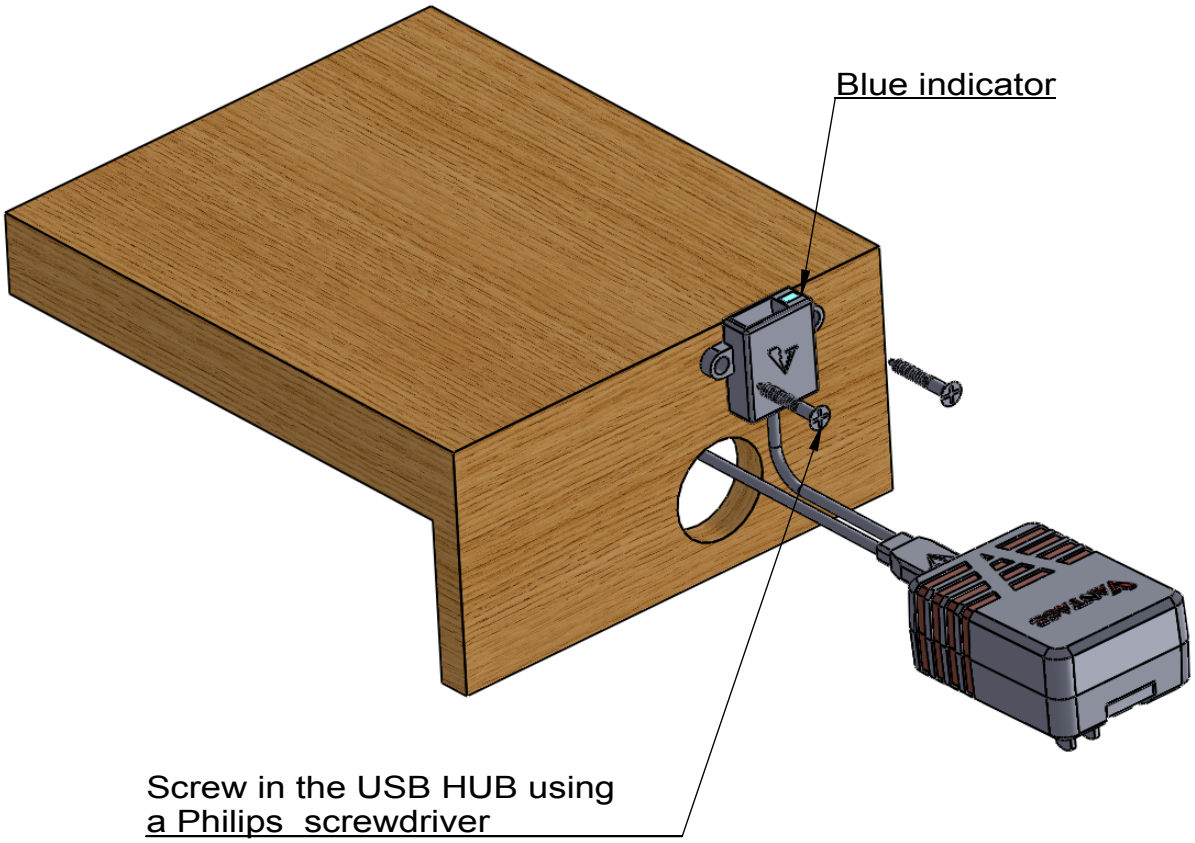

Step 5

This device complies with Part 18 of the FCC Rules. Operation is subject to the following two conditions:

(1) This device may not cause harmful interference, and

(2) this device must accept any interference received, including interference that may cause undesired operation

Warning: Changes or modifications to this unit not expressly approved by the party responsible for compliance could void user's authority to operate the equipment.

The equipment complies with FCC RF radiation exposure limits set forth for an uncontrolled environment.

This equipment should be installed and operated with a minimum distance of 20cm between the radiator and your body.