CabinAir

Nordzone™ System

User Guide

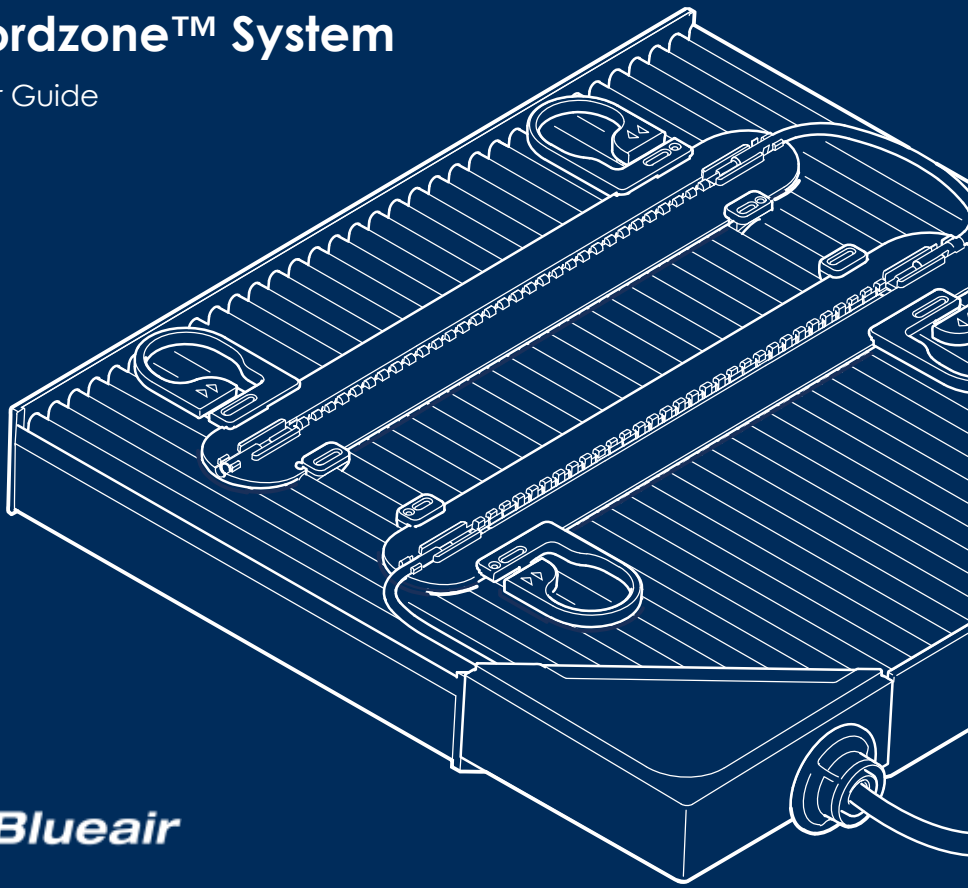

Blueair

This product is available in variations. Scan the QR-code on the product cover to access your model specific information or go to **www.cabinair.com** for information on specific vehicle models.

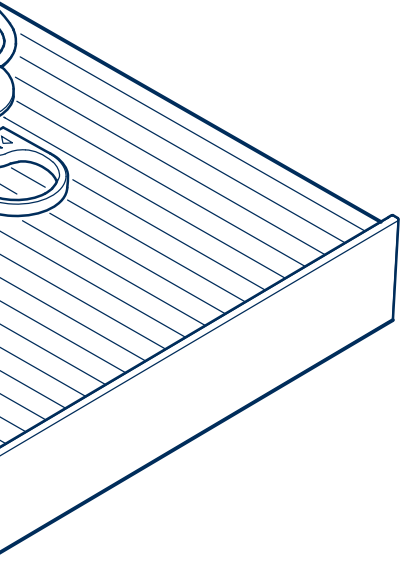

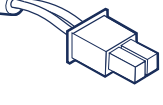

This document and its content, including written material and images, are the property of CabinAir Sweden AB. You may not copy, reproduce, modify, republish or distribute this document or any of its content without express written permission from CabinAir Sweden AB.

© 2020, CabinAir Sweden. All rights reserved.

Nordzone™ System User guide

Safety instructions **4**
Warning 4
Caution 4
Important 5
Disclaimer 5
The Nordzone™ System – box contents **6**
Healthy air solution from the Nordic forest **7**
Technology – active air cleaning 8
Installation **9**
Tools 9
Install the Nordzone™ System 11
Connect the Nordzone™ System to the fuse box 13
Replacement of the Nordzone™ System original filter 15
The Nordzone™ Air quality monitor **16**
Interface 16
Installation and placement 17
The Nordzone app **17**
How to improve the air quality in your car 17
Maintenance **18**
Support 18
Warranty 18
Troubleshooting **19**
Technical specification **20**

Safety instructions

Read these safety instructions carefully and take necessary precautions to reduce the risk of fire, electric shock or injury.

WARNING!

Warning indicates a hazardous situation that could result in death or serious injury.

- Do not use the product if the main power cord or cables are damaged. Contact your retailer for a replacement.
- Keep the product away from heat, liquids, detergents and flammable solvents.
- Do not use the Nordzone app while driving.

CAUTION!

Caution indicates a hazardous situation that could result in minor or moderate injury.

- Always disconnect the power before changing the filter.
- Only connect power after the Nordzone™ System has been fully installed and the inner lid of the filter compartment is remounted.
- When recirculation of the vehicle is activated, the level of CO_2 may increase and cause driver drowsiness.
- Avoid inhaling the particles from a used filter.
- The particle charging unit has sharp tips that may cause minor injury if not observed.
- Do not alter any parts in any way.
- To avoid electric shock or damage, keep the product away from children.

© 2020 CabinAir Sweden AB. All rights reserved.

IMPORTANT!

Follow these instructions in order to secure product functionality.

- Professional installation of this product is recommended.
- Use only the items supplied in the box. Do not substitute the Nordzone™ System original filter with another filter, as this will significantly affect product functionality.
- The product contains high precision technology. Dropping it may cause damage.
- Make sure that the product version matches the vehicle model.
- Make sure to choose a fuse that is only supplying power when ignition is turned on.

DISCLAIMER

- The Nordzone System must be installed and used according to the instructions in this user manual.
- The product warranty only applies if the product is installed according to these instructions and when original parts are used. For more information about warranty visit **www.cabinair.com**.
- CabinAir Sweden AB cannot be held liable for any product or vehicle damage, or personal injuries sustained by the user or others due to faulty installation or usage.

© 2020 CabinAir Sweden AB. All rights reserved.

The Nordzone™ System – box contents

1. Particle charging unit
2. Nordzone System original filter
3. Fuses
4. Fuse tap connectors/main power cord
5. The Nordzone air quality monitor*
6. Drilling template – used during installation

** Purchased separately or included in the Nordzone™ System Premium unit.*

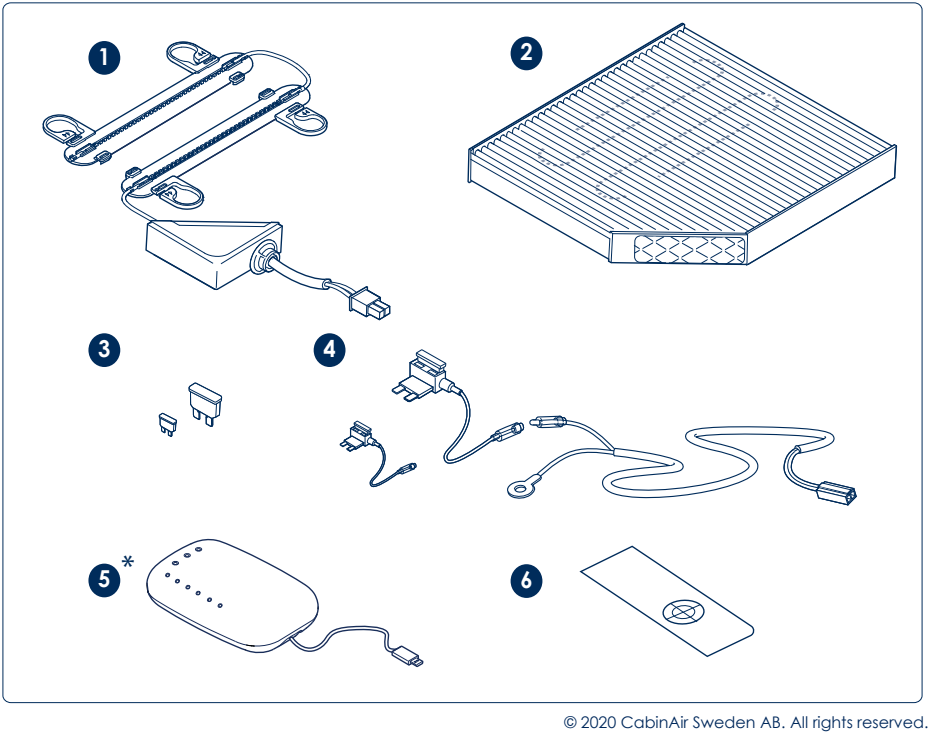

© 2020 CabinAir Sweden AB. All rights reserved.

Healthy air solution from the Nordic forest

Inspired by our origins in the vast Nordic forest region, we bring healthy air to drivers and passengers. Our Nordzone™ solution upgrades the climate system of your car, keeping the air inside healthy even when driving in dense traffic. Less exposure to airborne allergens and air pollution can ease asthma and allergy symptoms, as well as prevent respiratory problems.

- **Healthier**- removes harmful fine dust, pollen, $PM_{2.5}$ and ultrafine particles, smoke and odor. Filters out and deactivates bacteria and virus.
- **Safer-** no need for recirculation, less risk for CO_2 build up which can cause drowsiness.
- **Easier**- fully integrated with no loose items so you can focus on driving.

© 2020 CabinAir Sweden AB. All rights reserved.

Technology – active air cleaning

The two-stage technology is based on HEPASilent™, the technology invented by Blueair that is already used in millions of homes, offices and public spaces. It combines the effect of an optimized mechanical filter with active particle charging technology, which captures the particles more effectively than in a passive filter-only system. The polluted outdoor air is cleaned before it enters the cabin and replaces the in-cabin air with fresh and clean air.

- The particle charging unit – charges tiny particles such as $PM_{2.5}$, harmful gases, bacteria and viruses so they get trapped in the filter.

- The optimized filter – captures large particles such as pollen, dust and debris that has a direct, noticeable effect on breathing. The Nordzone™ System original filter also includes activated carbon which eliminates unpleasant odors.

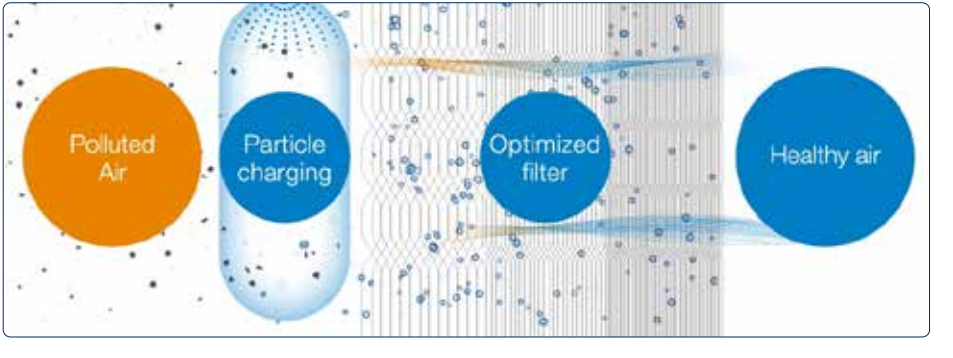

© 2020 CabinAir Sweden AB. All rights reserved.

Installation

IMPORTANT!
Professional installation of this product is recommended. This guide presents a general installation procedure. Scan the QR-code on the product box to access model specific information.

Installing the Nordzone™ System is similar to replacing a regular cabin air filter. The only difference is that the system is powered from the fuse box. Please note that the location of the fuse box, filter compartment, and how to remove the filter may differ depending on the vehicle model.

Tools

Installation of the Nordzone System might require the following tools:

A. Screwdriver
B. Drill

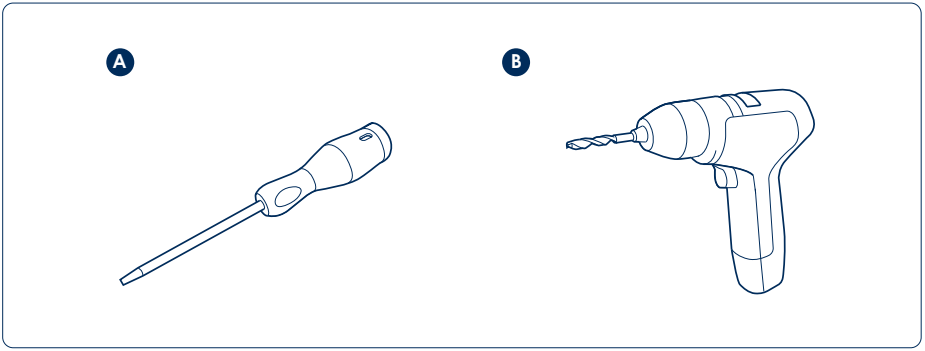

© 2020 CabinAir Sweden AB. All rights reserved.

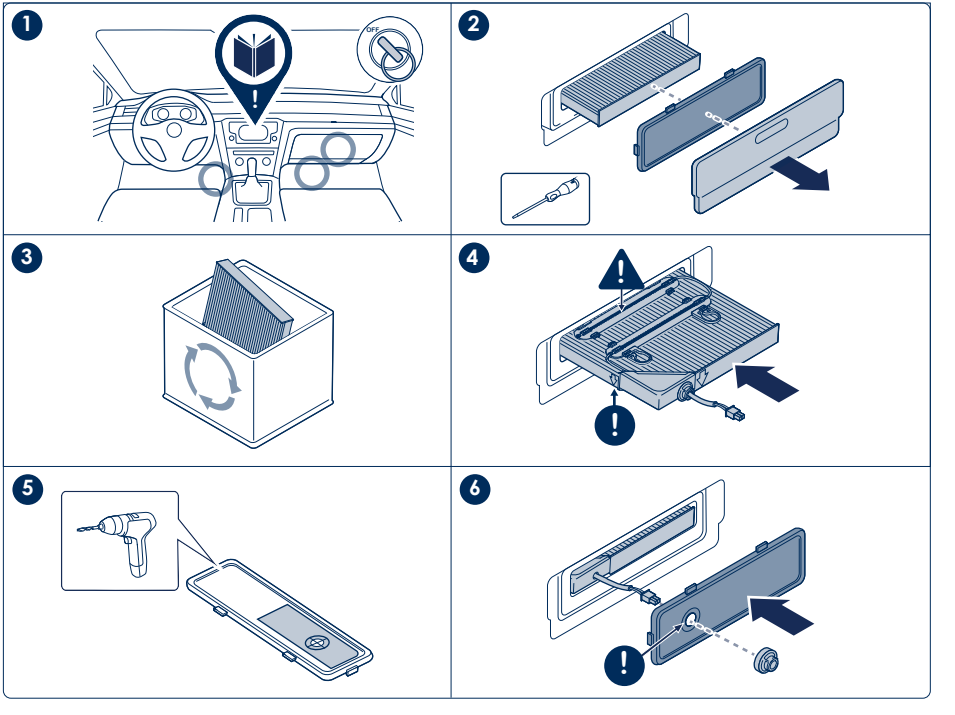

© 2020 CabinAir Sweden AB. All rights reserved.

Install the Nordzone™ System

Follow the steps below to replace a regular filter with the Nordzone System.

CAUTION! Voltage: Turn off the ignition to avoid the risk of electric shock.

IMPORTANT! Matching product version: Make sure that the product version matches the vehicle model.

1. Make sure the ignition is turned off. Locate the filter compartment. The location differs depending on vehicle model. Consult the service manual of the car if necessary.
2. Remove the cover(s), if any, and the inner lid of the filter compartment. Use the screwdriver if necessary.
3. Properly dispose of the used air filter.
4. Replace the regular filter with the Nordzone System.
   CAUTION! The particle charging unit has sharp tips that may cause minor injury if not observed.
   IMPORTANT! Make sure placement is according to the arrows.
5. Drill a hole in the inner lid according to the attached drilling template.
6. Unscrew the nut on the particle charging unit and pass the cable of the filter through the hole of the lid. Attach the lid and screw the nut back in its position.
   IMPORTANT! Make sure that the newly drilled hole does not have any sharp edges that may damage the cable.

© 2020 CabinAir Sweden AB. All rights reserved.

© 2020 CabinAir Sweden AB. All rights reserved.

Connect the Nordzone™ System to the fuse box

1. Locate the fuse box. The location differs depending on vehicle model.
   IMPORTANT! The location of fuse box and filter compartment may differ depending on vehicle model. Consult the service manual of the car if necessary.
2. Remove the cover(s) of the fuse box.
3. Select a fuse location that is only supplying power when the ignition is turned on. Consult the service manual of the car if necessary. Remove the original fuse, if any.
4. If the selected fuse location already had a fuse, insert it in the empty slot of the fuse tap connector. If not, use the fuse included in the product box and insert it in the empty slot of the fuse tap connector.
5. Insert the fuse tap connector in the selected fuse location.
   IMPORTANT! To avoid the risk of draining the battery, the fuse tap should connect to a fuse that does not supply power when the ignition is turned off.
6. Connect the ground connector to the ground screw. Use a screwdriver.
7. Connect the fuse tap cable to the red cable in the main power cord.
8. Remove the housings between the filter compartment and the fuse box, and route the main power cord between them.
9. Connect the main power cord to the Nordzone System in the filter compartment. Check that power is supplied to the product when the ignition is turned on, and that power is cut when the ignition is turned off. The installation is successful if the LED of the product indicates green. If it indicates red or does not light up, see section *Troubleshooting*.
10. Remount the housings and cover(s), if any, and make sure that the main power cord is routed neatly.

© 2020 CabinAir Sweden AB. All rights reserved.

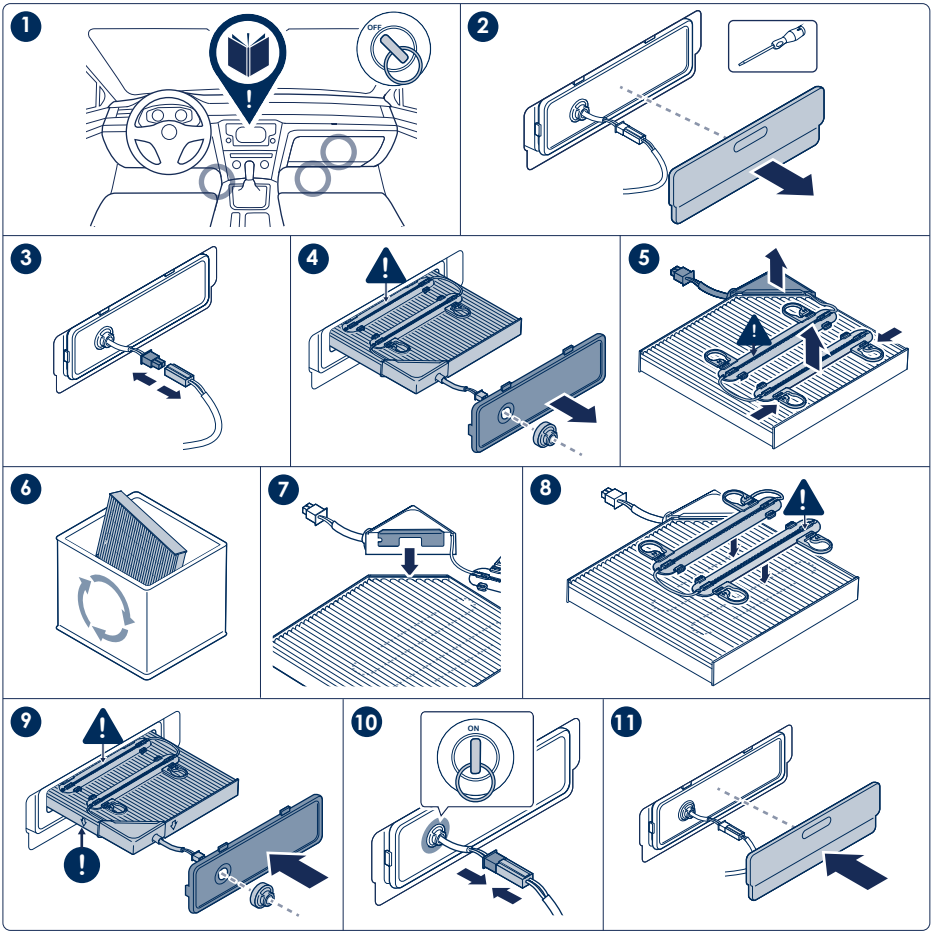

© 2020 CabinAir Sweden AB. All rights reserved.

Replacement of the Nordzone™ System original filter

CAUTION! Voltage: Turn off the ignition to avoid the risk of electric shock.

IMPORTANT! Matching product version: Make sure that the product version matches the vehicle model.

Product functionality: Use only the Nordzone System original filters to ensure proper function of the Nordzone System, and to qualify for warranty.

1. Make sure the ignition is turned off. Locate the filter compartment. The location differs depending on vehicle model.
2. Remove the cover(s), unscrew the nut and remove the inner lid.
3. Disconnect the main power cord.
4. Remove the used Nordzone System from the filter compartment.
   CAUTION! Avoid inhaling the particles from a used filter.
5. Remove the power unit from the corner of the filter. Remove the particle charger unit from the filter by pressing the clips. **CAUTION! The particle charger unit has sharp tips that may cause minor injury if not observed.**
6. Properly dispose of the used air filter.
7. Attach the power unit of the particle charger unit to the corner of the new Nordzone System filter.
8. Press the particle charger unit onto the pleats of the new filter. Make sure to match the printed outlines on the filter. Check that the unit is completely pressed down. Check that the cables are not damaged and that they are correctly connected.
9. Vacuum the filter compartment and insert the Nordzone System. Remount the inner lid**.**
   IMPORTANT! Make sure placement is according to the arrows printed on the filter.
10. Reconnect the main power cord to the Nordzone System filter. The installation is successful if the LED of the product indicates green when ignition is turned on. If it indicates red or does not light up, see section *Troubleshooting.*
11. Remount the cover(s), if any.

© 2020 CabinAir Sweden AB. All rights reserved.

The Nordzone™ Air quality monitor

The user can upgrade the Nordzone System with the Nordzone Air quality monitor. The monitor is included as part of the Nordzone System Premium unit, or purchased separately. This unit monitors and visualizes the levels of particles and gases inside the cabin and will alert the user to temporarily increased levels of PM, VOCs and CO_2 in situations like traffic jams, tunnel driving or overuse of recirculation mode.

The design is discrete, and the user interface is easy to understand at a glance, meaning you can focus on the driving.

Interface

The Nordzone Air quality monitor measures air quality continuously, displaying the result on the light scale. There are separate light scales, one for PM levels (A) and one for VOCs and CO_2 (B).

- White light = no action needed.
- Orange light = pay attention and take action.
- Red light = take immediate action.

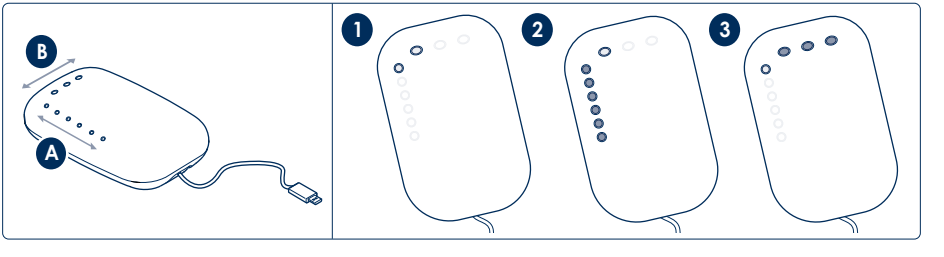

1. Healthy air – no action needed.
2. Fresh air but not clean (increased $PM_{2.5}$) – close windows, temporarily activate recirculation mode.
3. Clean air but not fresh (increased VOCs/CO_2) – open fresh air intake.

© 2020 CabinAir Sweden AB. All rights reserved.

Installation and placement

IMPORTANT!
Do not cover the unit: Place the Nordzone™ Air quality unit in a position where the air can fully circulate.

The Nordzone Air quality monitor should be placed inside the cabin where the driver can see the interface clearly without being distracted from driving. Mount the air quality monitor in an at-a-glance position close to the power connection. The air quality monitor has a magnetic bottom plate (magnetic holder not included) and also a bottom surface with high friction rubber.The Nordzone Air Quality monitor is connected via USB-C cable.

The Nordzone app

The app contains detailed information about your Nordzone System product. It indicates that it is working properly and displays the correct product version. When paired with Nordzone Air quality monitor the app compares real-time air quality data in-cabin and outdoors. It also shows historical data and gives recommendations for how air quality can be further improved.

Find the latest version of the Nordzone app at **app.cabinair.com.**

How to improve the air quality in your car

- Close all windows to prevent polluted air entering the cabin without passing the Nordzone System filtration solution.
- Avoid overuse of recirculation mode as this may cause CO_2 to build up, leading to drowsiness.
- If the app or monitor indicates increased particle levels in situations such as driving in tunnels, temporarily turn on air recirculation. Make sure fan speed is at a sufficient level and follow the air quality progress in the app or on the monitor to track CO_2 build up.
- If the app or monitor indicates increased VOCs and CO_2 levels, turn on fresh air mode.

© 2020 CabinAir Sweden AB. All rights reserved.

Maintenance

- For filter replacement procedure and frequency, always follow your vehicle's recommended change intervals.
- Vacuum the filter compartment when replacing parts of the Nordzone™ System.
- Do not allow foreign objects inside the filter compartment while the Nordzone System is installed. This may cause electric shock, damage the product, or affect product functionality.
- Do not repair or adjust any of the parts of the product. Contact your retailer for a replacement.

Support

For information regarding support visit **www.cabinair.com.**

Warranty

The one (1) year CabinAir limited warranty only applies when the original parts are used and when the product is installed and used according to the instructions of this user manual. For more information visit **www.cabinair.com.**

© 2020 CabinAir Sweden AB. All rights reserved.

Troubleshooting

Situation	Recommendation
Nordzone™ System unit does not work. LED on particle charger unit does not light up.	1. Check that the power source is correctly connected. 2. Check that the fuse is not damaged. If damaged replace fuse.
Nordzone System unit does not work. LED on particle charger unit indicates red light.	1. Check that all steps in the installation section have been conducted. 2. Check that the correct Nordzone System original filter is installed. 3. Check that no loose items are blocking the air flow in the filter compartment. 4. If necessary change your Nordzone System original filter. Check service intervals with your dealer. 5. Contact your retailer if the LED continues to indicate red.
LED on particle charger unit lights up when ignition is turned off.	1. Change the position of the fuse tap to one that is only supplying power when ignition is turned on, see section *Installation.*
Nordzone Air quality monitor does not light up when ignition is turned on.	1. Check that the power source is correctly connected. 2. Contact your retailer if the problem remains.

© 2020 CabinAir Sweden AB. All rights reserved.

Technical specification

	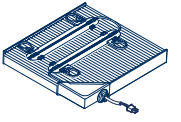 **Nordzone™ System**	**Nordzone™ Air quality monitor***	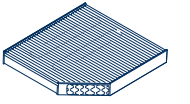 **Nordzone™ System original replacement filter****
Connectivity	Bluetooth***	Bluetooth	
Operating supply voltage	8-16VDC	5VDC (USB)	
Current consumption	0.1A	0.5A	
Operating temperature	- 20° to 70° C	- 10˚ to 50˚ C	
Functional lifetime	80 000 km / 5 years	80 000 km / 5 years	*For replacement frequency, always follow recommended change intervals of your vehicle.*
Frequency range	2,402-2,480 GHz	2,402-2,480 GHz	
Output power	-6dBm(CE)	-8dBm(CE)	
Firmware version	1.0	1.0	
Hardware	1.0	1.0	

Warning: Changes or modifications to this unit not expressly approved by the party responsible for compliance could void the user's authority to operate the equipment.

This device complies with Part 15 of the FCC Rules. Operation is subject to the following two conditions:

(1) this device may not cause harmful interference, and

(2) this device must accept any interference received, including interference that may cause undesired operation.

© 2020 CabinAir Sweden AB. All rights reserved.

Offers and availability may vary by country.

**Included in Nordzone System Premium*

*** micronAir® proTect line with antiviral surface protection by means of a functional filter layer based on fruit extract (active ingredient CAS-Nr. 5949-29-1) for use in air handling / air conditioning systems. Safe bacteriostatic and fungistatic surface protection against a multitude of gram-positive and gram-negative bacteria, yeast and funghi as well as proven antiviral properties (Influenzavirus HIN1 and Coronavirus HCoV 229E) according to ISO 18184.*

**** The Bluetooth® wordmark and logos are registered trademarks owned by Bluetooth SIG, Inc. and any use of such marks by CabinAir Sweden AB is under license. Other trademarks and trade names are those of their respective owners.*

© 2020 CabinAir Sweden AB. All rights reserved.

CabinAir

Healthy air for the ride

www.cabinair.com

This document and its content, including written material and images, are the property of CabinAir Sweden AB. You may not copy, reproduce, modify, republish or distribute this document or any of its content without express written permission from CabinAir Sweden AB. © 2020, CabinAir Sweden. All rights reserved.

501401 rev A