Smart car watch key

Catalog

1. Document modification record 3

2. Document purpose and control 4

2.1 purpose 4
2.2 Document modification control 4

3. Smart watch key standard

3.1 hardware configuration 5
3.2 Smart Watch solution 5
3.3 Smart watch key solution5
3.4 System operation logic 6
3.5 Technical parameter6
3.6 Design stack diagram 6
3.7 Hardware block diagram 7
3.8 Important components 7
3.9 Important note 8

4. DV experiment requirements 8

5. Note description 9

2. Document purpose and control

2.1 purpose

This specification defines the smart car watch key based on automobile market demand. include module design requirements, product performance description, design experiment requirements, system logic, etc

2.2 Document modification control

The first version of the specification is released, and AOD engineers will be responsible for modifying and updating the document according to actual needs

Any modification and update of the content and format of the specification must be approved by AOD system engineer
The document does not limit the appearance (round or square watch), the size description in the document is the existing smart watch key, and the appearance structure can be customized according to customer requirements

3. Smart watch key standard

Smart watch key, round screen full touch design, dial diameter is about 45mm. Car key part Bluetooth + car key chip (high and low frequency way) design. It has the functions of smart watch on the market, such as exercise mode, sedentary reminder, sleep monitoring, message reminder, heart rate monitoring, call reminder, etc.

Display screen

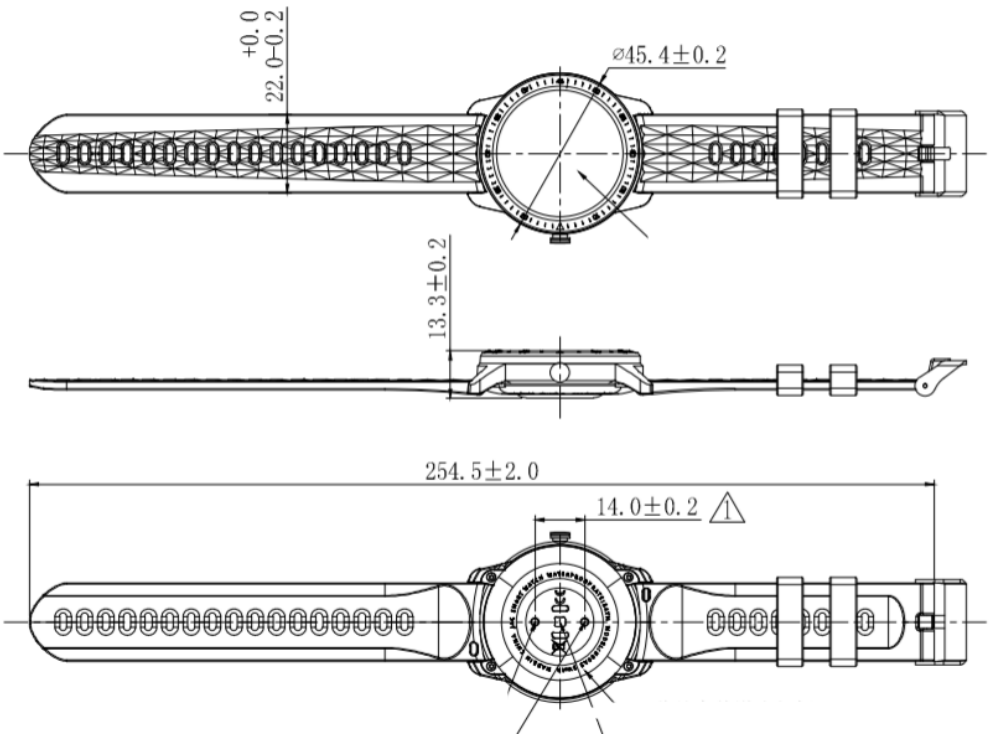

Through the high and low frequency module, the car watch key has all the functions of the car key: short press to lock and unlock, long press to up and down window and open the tailgate, search for the car, etc.

3.1 Hardware configuration

Material

Bottom cover	PC+PA30%plastic
Face cover	Glass panel
Watchband	TPU ((customizable watchband))
Watch buckle	stainless steel
color	Black (optional)

Heart rate: dual photoelectric heart rate sensor
Calculating the number of steps: 3-axis gravity sensor
Display: 1.28 inch LCD color screen
TP: Full touch operation
Bluetooth: Bluetooth 5.0
Battery: polymer lithium battery about 200 mAh, with protection cover
Support system: above Android 6.0, IOS 9.0
3ATM
Waterproof rating: 3ATM

3.2 Smart watch functional specifications

Heart rate monitoring: It can record heart the whole day heart rate automatic, and measure and analyze the heart rate indicators at any time.
A variety of sports modes: walking, running, cycling, mountain climbing, playing badminton, swimming, indoor running
Sleep management: record sleep information and provide sleep report
Information push function: call reminder (support rejection and silence), wechat information view, SMS information view.
App timing reminder: silent alarm clock / schedule reminder / sedentary reminder / drinking reminder
Weather information: display the weather condition of the day (automatic update time of Bluetooth connection)
Others: search for mobile phone, screen will light up when you lift your wrist.

3.3 Smart key function specification

PKE function
It can replace the car key, realize the remote control door unlock, lock, opening the trunk door, searching the car, etc
PEPS function
It can replace the car key to realize keyless entry and keyless start. The watch key

can be started in the front and rear areas of the car, and supports the immo function.

Low power reminder function
When the power is lower than 20%, the low power reminder (vibration and screen display) will be given every other fixed period of time; when the power is lower than 10%, the watch will be closed and the PKE and PEPS functions will be retained,
Charging with mobile devices

3.4 System operation logic

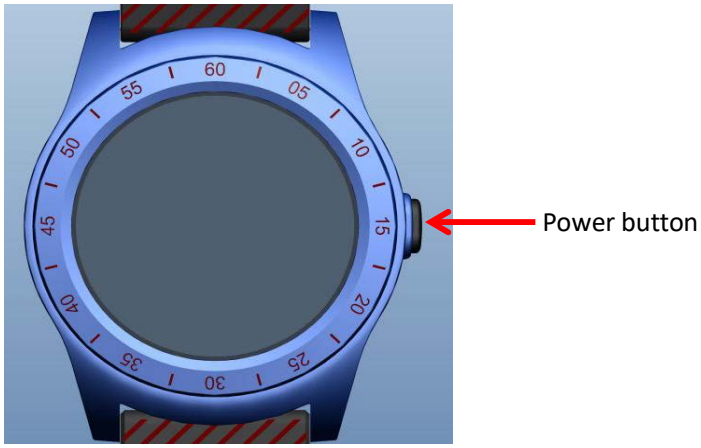

Power button:

Short press: wake up the screen, and then press to return to the dial

Long press: press 3 seconds for any page to turn off

Sport mode: short press to stop / Keep moving

Key function: in the state of off / lock screen, press and hold two times to lock the vehicle, and press and hold three times to unlock the vehicle

Sliding logic

1. Slide right to left to enter the app list
2 Slide left to right to return
3 Slide status bar from up to bottom
4 Slide the message from bottom to top
5 Press and hold the main interface for 3 seconds to switch the dial

Dial switch

1. In the main dial UI interface state, press and hold the dial for 3 seconds to enter the dial thumbnail, and slide left to switch the dial UI
2. The setting sequence of dial is fixed and does not cycle
3. The watch can store a total of 11 dials for UI use. By default, 6 dials are available for customers to switch, and up to 5 dials can be added to the app dial market. These 5 dials UI can be replaced by customers.

ON / OFF screen:

1. Press the power button for 3 seconds to turn on the screen and enter the UI of the main interface
2. When the watch system is turned on by default, screen will light up when you lift your wrist.
3. The watch can be set for 5 seconds to 10 seconds without any operation information screen. After 5 seconds, the system will return to the main interface
4. In the motion mode to turned off screen, and the screen will stay in the motion state interface without logic returning to the main interface
5. The watch will not turn off the screen after the stopwatch and heart rate start. It will turn off after 5 seconds once stop

3.5 Technical parameter

Watch weight: 50g (head 30g / strap 20g)
Display screen: 1.28 "(TFT screen), 240 (R.G.B)*240
Working temperature: - 10 ℃ ~ 60 ℃
Working humidity: 0 ~ 95%; atmospheric pressure: 86 ~ 106kpa.
Screen brightness: 250~300cd/m²
Service time: normal standby time 25 days, normal use time about 7 days
Charging mode: magnetic suction charging stand, Voltage 5V, current 1a-2.1a, full charged in 1.1 hour
Operation mode: full touch operation
Wireless connection: connect watch through mobile App Bluetooth

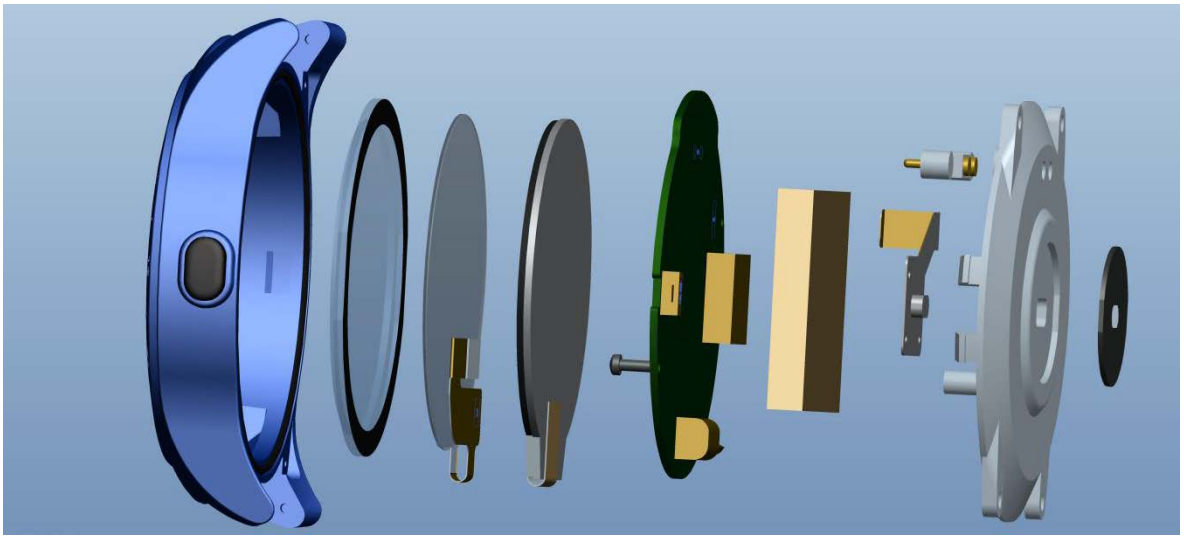

Screen + TP cable
PCB board
screen
Vibrating motor
Heart rate sensor
Polymer battery
Rechargeable thimble

3.6 Important components

NO	Project	important materials
1	key	1、Chip: Patch MCU_NCF29A1 2、3D inductor: Antenna_X-12702-029 3、 High frequency ceramic antenna: Onboard antenna 433Mhz
2	Power management	1、 Power chip: Patch transfer IC_BQ24045 2、Power chip: Patch power IC_RT9073A-33GQZ 3、battery: 402324HV-200mAh 4、Battery conversion chip: Battery conversion ICLSF0204RUTRUQFN,2.0*1.7mm 5、Battery charging chip: Recharge IC_SGM40561-4.35YTDE8G/TR_2×2 ×0.75mm
3	LCD	Display: TFT screen, resolution, Resolution 240(R.G.B)*240 1.28"
4	MCU(BLE)	Bluetooth chip: C77540_NRF52840
5	Touch module	GH301-PCBA module
7	Vibration motor	Cylindrical core motor _4*3*7
8	G-sensor (Sensor)	Acceleration sensor: KX023-1025

3.7 Important note

1）The interior space of the watch case is designed by stacking the size of the components, and the appearance can be designed separately

2）The bottom shell and cover of the watch are of glue sealing design, and the designed waterproof grade is 30 meter

3）Smart key function, fully simulate the high and low frequency design scheme of car key, safe and reliable, low power consumption

4）When the watch is in low voltage, a prompt will pop up on the screen to meet the priority of using the smart key. When the power is lower than 10%, the watch function will enter the off state automatic.

5）The screen and touch panel are fully designed to avoid light leakage and save the internal space of the product

6）The matching mode and logic of the watch are the same as the original car key;

4. DV Important requirements of experiment

High temperature operation	test temperature 60 ℃ test time -48h
Low temperature operation	test temperature -10℃；test time 48H
Free-drop	Drop height: 1m; the ground that accepts the drop: concrete floor or steel plate: temperature: room temperature. Falling direction: each sample has several spatial axes, and each drop is along a spatial axis direction (that is, aiming at the ground with one side of the shell)
Vibration test	According to GB / t2423.10 test FC, the DUT is not power and vibrates in three mutually perpendicular directions
Drop test of transport package	After pretreated according to GB / T 4857.2 for 4 h, it was dropped according to GB / T 4857.5 and table 6 of the standard
Constant damp heat test	a）Test time：21 days； b）Test conditions：（47±1）℃，（96±2）%
Thermal Shock	Test temperature：High temperature 50℃，Low temperature-10℃； Conversion time: < 30s; number of cycles: 170 The temperature holding time depends on the weight of the sample， Divided into 30min (less than 0.68kg)，60min（0.68kg~4.53kg）。
temperature variation	a) The test time was 21 cycles； b）Test conditions: high temperature 55 ℃, low temperature - 10 ℃
surface process	RCA paper tape wear resistance ⩾ 150 cycles Hundred grid test 4B、 Cosmetics resistance test (household detergent / soapy water / sunscreen / Hand Cream / orange juice / tea / Cola / artificial sweat) Alcohol resistance ⩾ 150 cycles
Salt spray performance	Test method: according to GB / T 2423.17: salt spray； Test time：48H
Waterproof performance	According to the standard of GB / t30106-2013 / iso22810:2010, the waterproof is up to 30 meters
Electrostatic immunity	According to Q / JQ 3627.10-2015, strength requirements： L1: contact discharge ± 4KV, air discharge ± 6kV； L2：contact discharge±6KV，air discharge±8KV； L3：contact discharge±8KV，air discharge±15KV； L4：contact discharge±15KV，air discharge±25KV；
Charge/discharge test	Guarantee battery life for 2 years
Key high / low frequency test	Use a spectrum analyzer to test the high frequency 433.92MHz.

5. Note description

1) The watch has a waterproof rating of 30 meters, suitable for swimming in pools and shallows, not suitable for diving, and does not support sauna;

2) After soaking in water, you need to wipe it clean with a soft cloth before you can operate the touch screen and charge;
3) The watch is compatible with seawater, casual and alkaline solutions. Aggressive liquids such as chemical reagents are not waterproof;
4) Corresponding certification can be made according to customer requirements, such as CE FCC ROHS GB4943, etc.;
5) The watch charging stand extension cable is a USB interface, which can be charged using the mobile phone charging stand, computer USB port, and power bank;
6) A mobile phone charging head with a rated output voltage of 5V and a current of 2A can be used for charging;

END

FCC Caution:

This device complies with part 15 of the FCC Rules. Operation is subject to the following two conditions: (1) This device may not cause harmful interference, and (2) this device must accept any interference received, including interference that may cause undesired operation.

Any Changes or modifications not expressly approved by the party responsible for compliance could void the user's authority to operate the equipment.

Note: This equipment has been tested and found to comply with the limits for a Class B digital device, pursuant to part 15 of the FCC Rules. These limits are designed to provide reasonable protection against harmful interference in a residential installation. This equipment generates uses and can radiate radio frequency energy and, if not installed and used in accordance with the instructions, may cause harmful interference to radio communications. However, there is no guarantee that interference will not occur in a particular installation. If this equipment does cause harmful interference to radio or television reception, which can be determined by turning the equipment off and on, the user is encouraged to try to correct the interference by one or more of the following measures:

-Reorient or relocate the receiving antenna.

-Increase the separation between the equipment and receiver.

-Connect the equipment into an outlet on a circuit different from that to which the receiver is connected.

-Consult the dealer or an experienced radio/TV technician for help.

This equipment complies with FCC radiation exposure limits set forth for an uncontrolled environment.

FCC ID: 2AXCOWY2-TF