29″ In-cell Strip Touch Screen with Android Operating System

Model: LD290EJS-FPN1

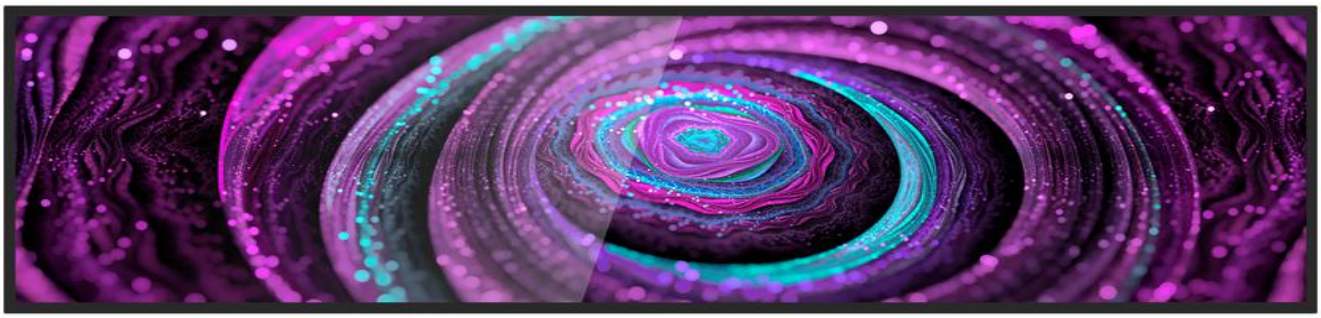

In order to better use this product

Please keep this manual Properly

DIRECTORY

PAGE

SAFETY INSTRUCTIONS 1
WHAT'S IN THE BOX 2
Package Contents 2
MOVING THE DISPLAY 3
Unpacking the Display 3
Carrying the Display 5
Placing the Display 5
Setting Down the Display 5
MOUNTING THE DISPLAY 6
Orienting the Display 6
Wireless Antenna 7
Wall Mount Specifications 7
SETTING UP THE DISPLAY 8
Main Components 8
Connecting the Power Cable 9
CONNECTING THE DISPLAY 10
Using the Micro-USB Port 10

SAFETY INSTRUCTIONS

Please carefully read through and keep the following instructions for future reference before using the display.

- Before using the LCD display, please read this manual completely and follow the guidelines to protect your own and other people's property and avoid causing serious injury.
- DO NOT use this apparatus near water or install in a high-humidity environment.
- DO NOT place this apparatus in direct sunlight or install near any heat sources (such as radiators, heat registers, or stoves).
- DO NOT block any ventilation openings. Always leave a space of at least 10cm around this apparatus. The slots and openings are provided to protect the display from overheating and to help maintain reliable operation of the display.
- NEVER place this apparatus on an unstable cart, stand, bracket, or table. It may cause serious personal injury, death, or serious damage to the display.
- When positioning the display, make sure the power plug and outlet are easily accessible and protect the power cord from being walked on or pinched.
- DO NOT overload the wall outlets and connect too many appliances to the same AC power outlet.
- DO NOT use any unapproved items or cables to connect to this apparatus.
- DO NOT defeat the safety purpose of the polarized or grounding type plug.
- ONLY USE accessories specified by the manufacturer.
- Clean only with a dry cloth and turn the power off before cleaning.
- Keep this apparatus and all package contents (including the EPE foam packaging cushion and protective board) out of the reach of children at all times.
- Never attempt to repair or open the display by yourself. Opening and removing the covers may expose you to dangerous voltage or other hazards. Failure to follow this WARNING may result in death or serious injury. Please contact your dealer or a service technician for assistance.
- Too much screen time may hurt your eyesight. Rest your eyes for 10 minutes after 30 minutes of screen time.
- Kids under 2 years old should not watch the screen, and kids over 2 years old should not watch the screen for more than 1 hour per day.

WARNING : If using a Class 1 adapter, connect only to a grounded electrical outlet.

Consult an authorized service technician if the display does not operate normally when you have followed the instructions in this manual.

WHAT'S IN THE BOX

Package Contents (Master Pack of 6)

Check your product box for the following items. If there are any missing accessories, contact the local dealer where you purchased your display. The illustrations in this manual may differ from the actual product and items.

Display x 6

Power Adapter x 6

MOVING THE DISPLAY

Unpacking the Display

Before unpacking the display,Please check the packaging first, prepare a flat and stable surface near a wall outlet. Set the product box in an upright position according to the arrow markings on the outside of the product box.

1. Open the product box from the top side.

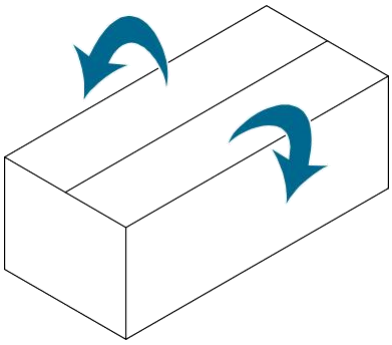

2. 6 cushion foam pad on top of package.

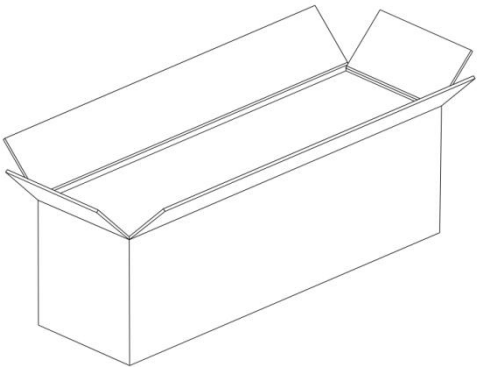

3. Remove six cushion foam pad from the side compartments in the top layer.

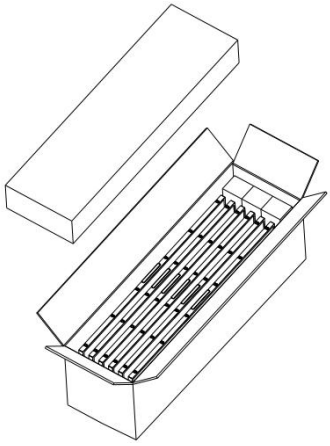

4. Take out 6 accessory bags from the side of the box.

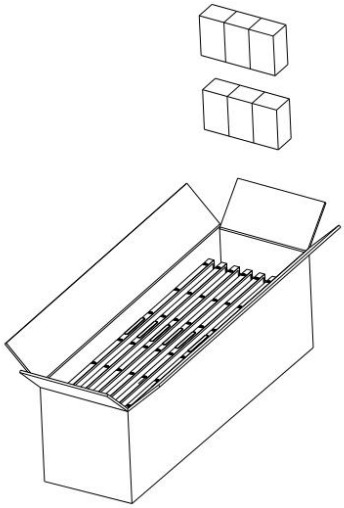

5. Take out the display one by one from the compartment of the packing box.

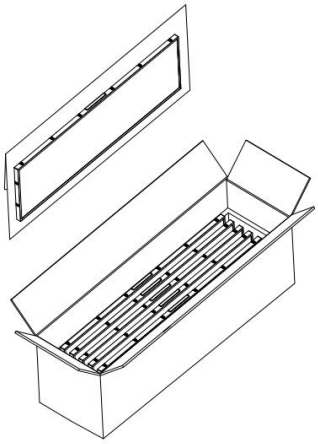

6. Remove the electrostatic bags covering each display.

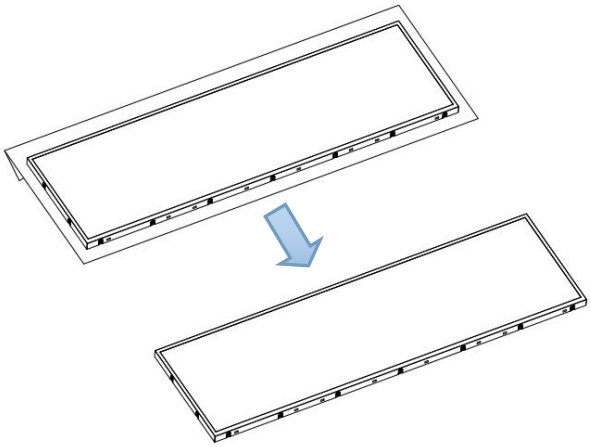

Carrying the Display

When carrying the display, always hold the display securely using both hands. When gripping the display do not put force on the screen.

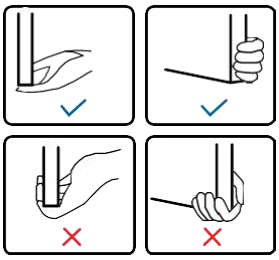

CAUTION: Avoid applying force or using sharp objects on the screen at all times.

Placing the Display

When placing the display, always put the screen face down as illustrated in the Setting Down the Display section. Never stand the display upright. Never tilt the display towards the left, right or balanced on a single corner of the frame.

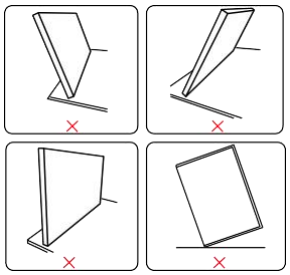

Setting Down the Display

When setting the display down, place the screen face down on a flat and stable surface covered by a protective sheet and a table cushion as shown in the illustration provided.

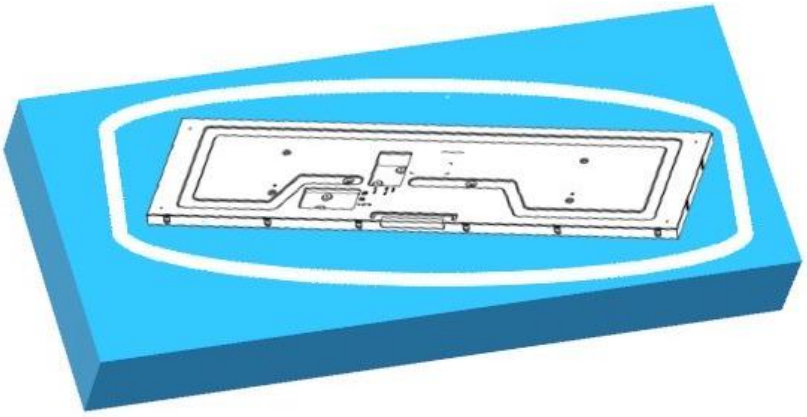

CAUTION: Never press or place anything on the back cover. This may damage the internal parts of the display.

MOUNTING THE DISPLAY

Orienting the Display

To avoid injuries, follow the installation instructions to safely install the display onto a wall.
It is recommended to allow a certified installation company conduct the wall mounting operation.

CAUTION: Dropping the display may cause injuries to people around it.

NOTE: A wall mount may be purchased separately for easier installation.

If you want to use the monitor vertically or horizontally, please adjust the monitor, make sure that the output port and input port of the monitor are free from obstructions, otherwise the monitor may not work.

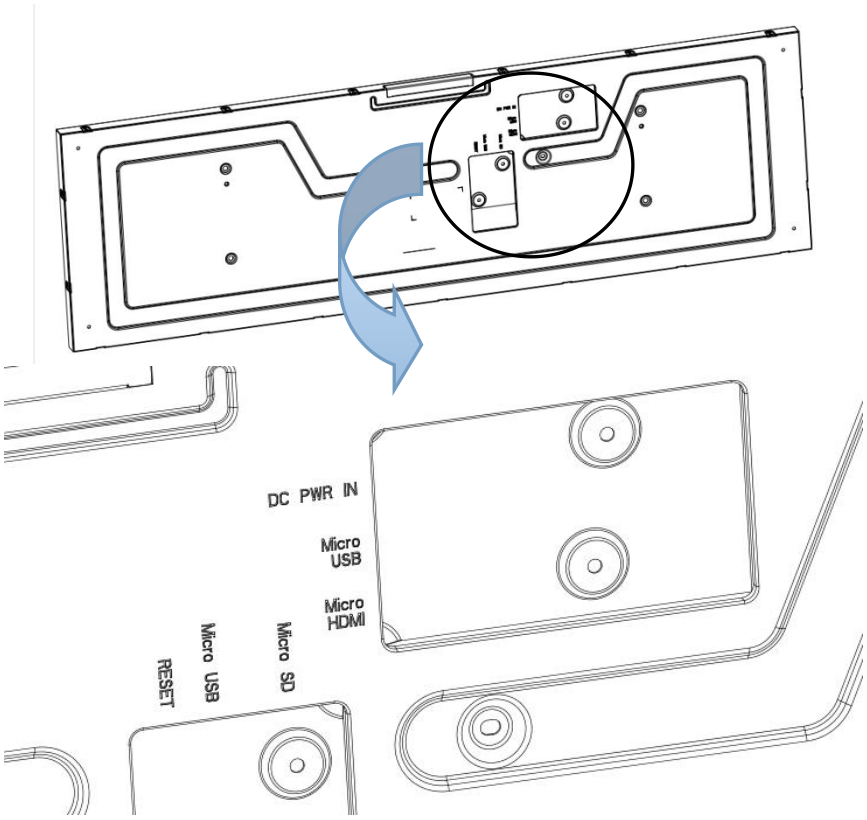

NOTE: Before mounting, make sure there is space to connect your devices.

Wireless Antenna

The display features an antenna on its top side used for Wi-Fi connections.When installing the display, please ensure that no objects are placed on the wireless antenna and that the area around the antenna is kept clear of any metal objects, devices, or equipment. Failure to do so will result in weak or possibly no wireless signal.

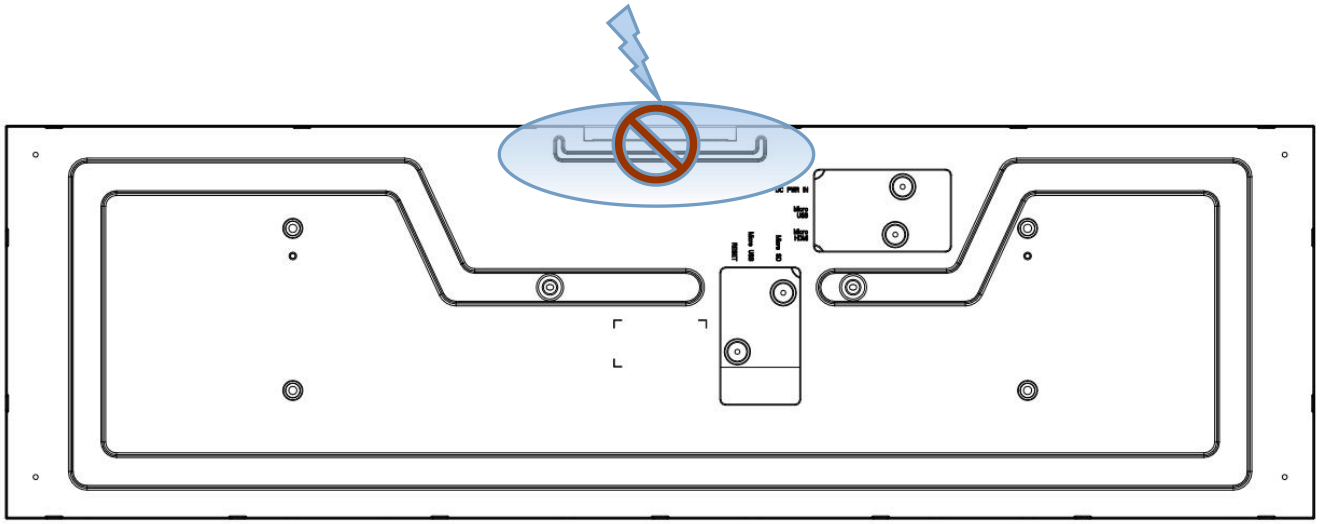

Wall Mount Specifications

The back of the display is equipped with four screw-holes that allow for mounting. Firmly secure a mount onto the display using two M4x4mm length screws (maximum torque: 6 kgf-cm).

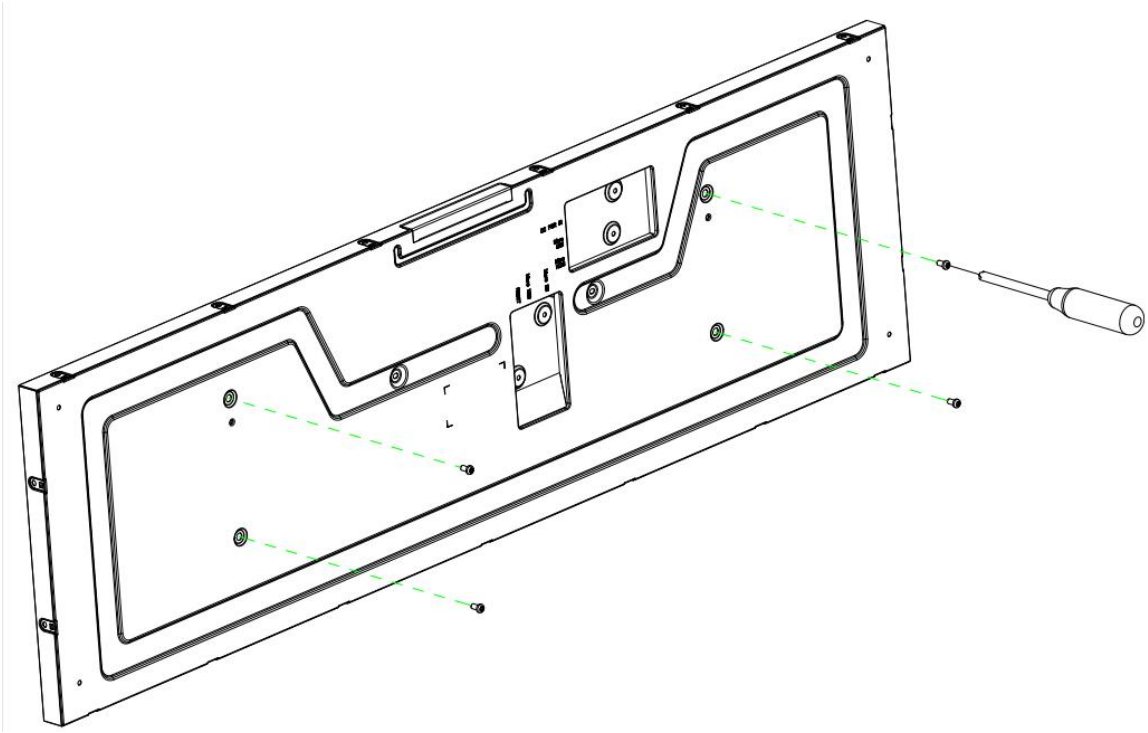

SETTING UP THE DISPLAY

Main Components

The following image and table show the location of the connectors and other components.

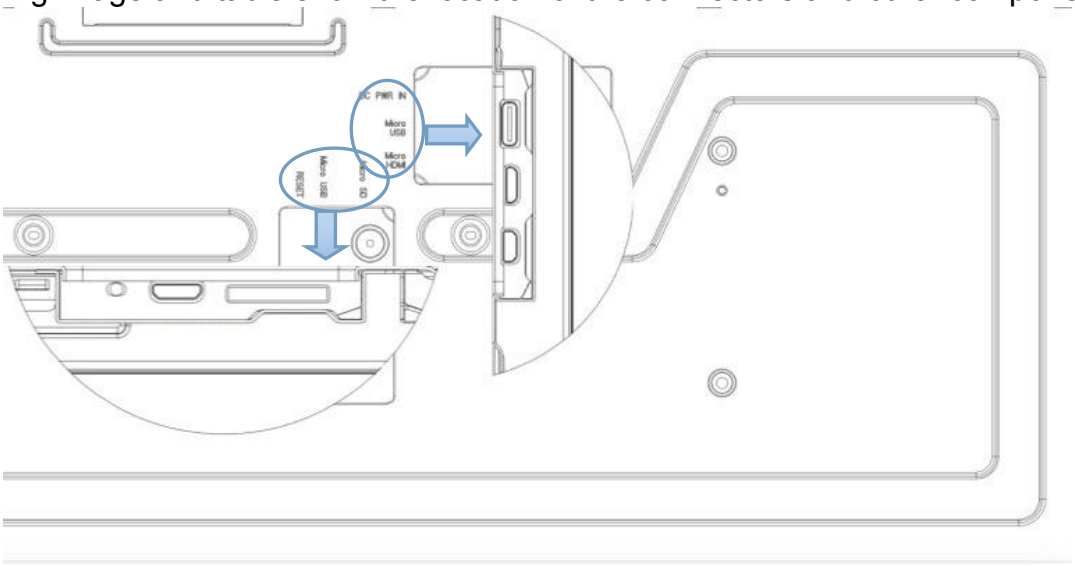

Item	Description
DC PWR IN	Connects with the supplied adapter and power cord.
Micro USB*1 (OTG)	Connects with storage devices containing video and image files, a mouse, or a keyboard.
Micro USB*1	Connects with storage devices containing video and image files, a mouse, or a keyboard.
Micro HDMI	Connects with the Micro-HDMI input port of a second bar-type display to duplicate the video shown on this display.
RESET	Press with a sharp-tipped instrument to restart the display.
Micro SD	Interface for reading Mirco SD data

Connecting the Power Cable

1. Connect the adapter to the display.
2. Fully insert the plug the power cord into the power outlet socket.

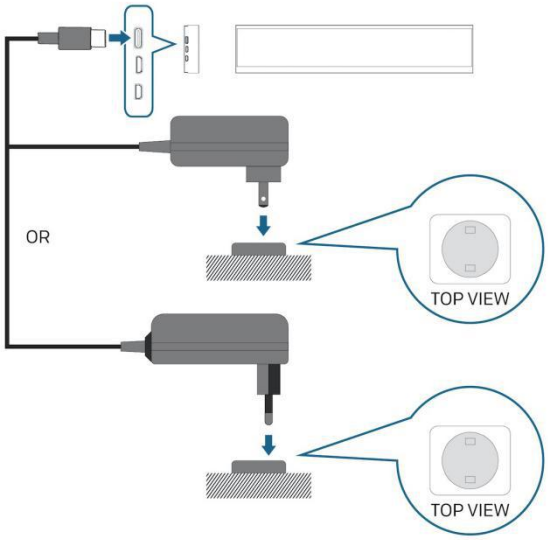

Once the power connection is connection is made, the display will automatically power on.

CAUTION: Loose connections may cause noise. Do not plug and unplug the power cord repeatedly in a short period of time.

NOTE:

- The supplied power cord varies depending on the country where you purchased this apparatus. For all cases, use a power cord that matches the AC voltage of the power outlet and has been approved by and complies with the safety standard of your country.
- Be sure use applicable AC/DC adapter:

CAUTION: When disconnecting the AC power cord, be sure to first disconnect the plug from the outlet socket.

CONNECTING THE DISPLAY

NOTE: Before making connections, make sure that the power for all the connected equipment is off and then powering on each device including the display after the connections are made.

Using the Micro-USB Port

1. Connect a USB-to-Micro-USB adapter or hub to the M-USB input port on display:
2. Connect any of the following items to the USB-to-Micro-USB adapter or hub:
   - USB flash drive, keyboard, or mouse. Once connected the display will automatically display the video/image files located on the flash drive.
   - Ethernet hub via an RJ45 cable and an RJ45-to-USB adapter.

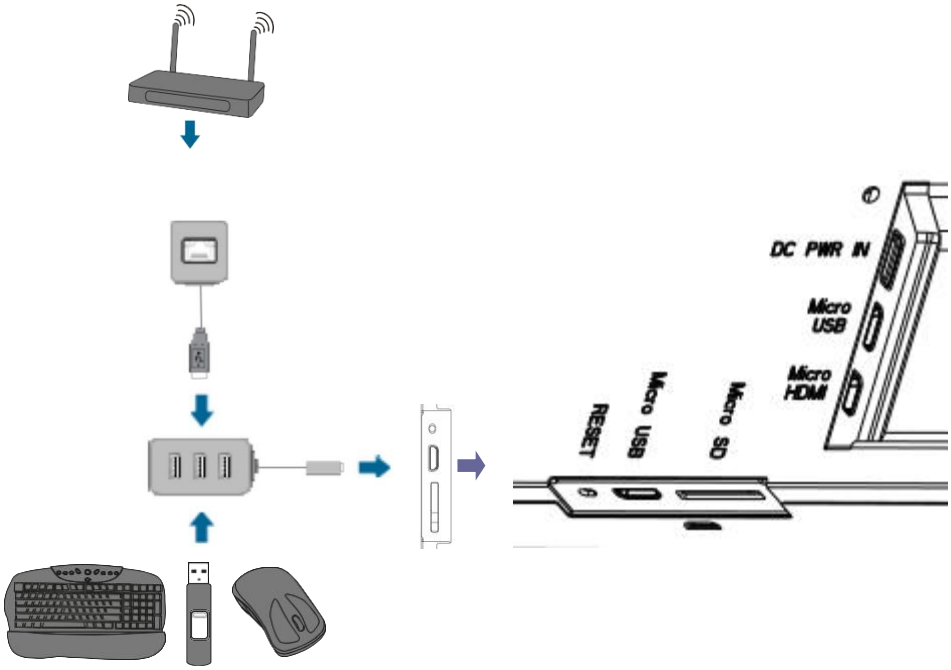

NOTE: The display only supports the following video/image file formats (with their listed resolution) via the Micro-USB port:

- MP4 (H.264/AVC) - 48x48pixels to 4096x2304pixels
- JPG,JPEG - 48x48pixels to 8176x8176pixels,BMP,GIF,PNG
- MPEG,DIVX,MVC,GOOGLE VP8,VC-1 - 48x48pixels to1920x1088pixels

APPENDIX

NOTE:The following is the description of the product parameters for reference only. If you have any questions, please contact the supplier.

一、Display

LCD panel	Size	29 inch
	Backlight type	LCD
	Display area	698.40（H）*196.425（V）[mm]
	Resolution	1920*540
	Brightness	500cd/㎡
	Viewing angle	89°（CR≥10）（typ.）
	Refresh rate	60Hz

二、Touch screen

Touch panel	Contact material	Polarizer
	Touch technology	LG Incell touch
	Interface driver	USB free drive
	Touch method	Fingers or Capacitive pen
	Support system	Android

三、System Configuration

Android	Android version	Android 7.1
	CPU/GPU	RK3288W;
	ROM	8G ROM
	RAM	1G RAM
	Scalable storage	128GB
	Video / audio system	PAL，NTSC，SECAM
	Physical buttons	A separate button at the rear
	Rear interface	Micro_USB2.0*1（OTG）、Micro_USB2.0*1、DC12V in TYPE C*1 、 Micro_HDMI Output*1、Reset button*1;
	Speaker	NA
	Wifi	Built-in
	Bluetooth	Built-in

四、Power Specifications

Power parameters	Input voltage	220V~50/60Hz
	Power consumption	<36w
	Standby power consumption	≤0.5W
	AC switch	NA
	Power interface	Type-C

Outline Dimension

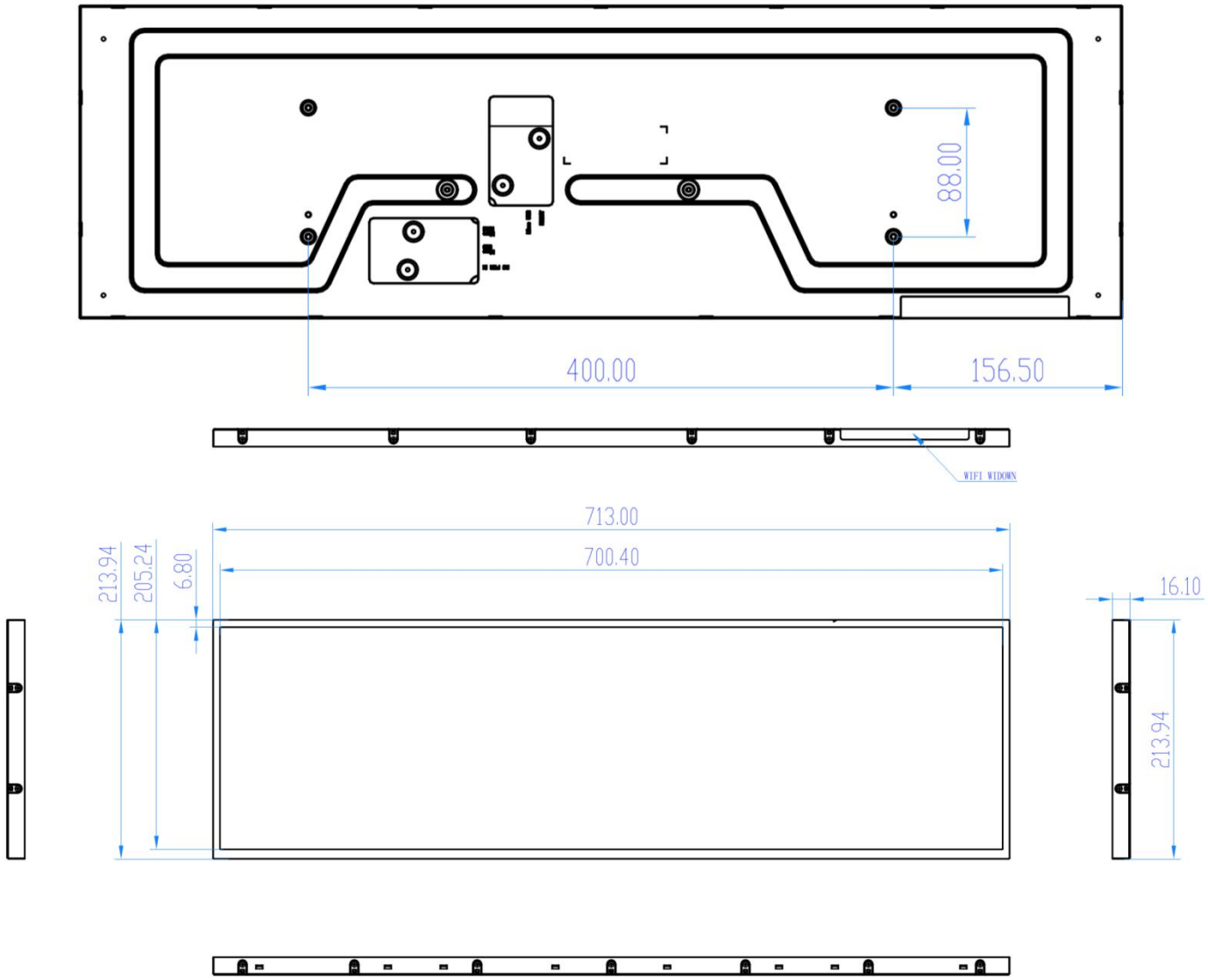
88.00
400.00
156.50
WIFI WIDOWN
713.00
700.40
213.94
205.24
6.80
16.10
213.94

FCC WARNING

This device complies with part 15 of the FCC Rules. Operation is subject to the following two conditions: (1) this device may not cause harmful interference, and (2) this device must accept any interference received, including interference that may cause undesired operation.

Any changes or modifications not expressly approved by the party responsible for compliance could void the user's authority to operate the equipment.

NOTE: This equipment has been tested and found to comply with the limits for a Class B digital device, pursuant to Part 15 of the FCC Rules. These limits are designed to provide reasonable protection against harmful interference in a residential installation. This equipment generates, uses and can radiate radio frequency energy and, if not installed and used in accordance with the instructions, may cause harmful interference to radio communications. However, there is no guarantee that interference will not occur in a particular installation.

If this equipment does cause harmful interference to radio or television reception, which can be determined by turning the equipment off and on, the user is encouraged to try to correct the interference by one or more of the following measures:

-- Reorient or relocate the receiving antenna.

-- Increase the separation between the equipment and receiver.

-- Connect the equipment into an outlet on a circuit different from that to which the receiver is connected.

-- Consult the dealer or an experienced radio/TV technician for help.

To maintain compliance with FCC’s RF Exposure guidelines, This equipment should be installed and operated with minimum 20cm distance between the radiator and your body: Use only the supplied antenna.