TEST REPORT

For

Braille Labeler

In conformity with

FCC CFR 47 Part15 Subpart B

Model : BL-1000 LINK

FCC ID : 2AXGX-BL1KL

Test Item : Braille Labeler

Report No. : WE200713BB2-11

Issue Date : September 17, 2020

Prepared for

KGS CORPORATION
1004 OGAWA, OGAWA MACHI, SAITAMA 355-0321, JAPAN

Prepared by

SGS Japan Inc.
3-5-23, Kitayamata, Tsuzuki-ku, Yokohama 224-0021 Japan
Telephone: +81-(0)45- 550-3520
FAX: +81-(0)45- 592-7506

This document is issued by the Company subject to its General Conditions of Service accessible at http://www.sgs.com/en/Terms-and-Conditions.aspx. Attention is drawn to the limitation of liability, indemnification and jurisdiction issues defined therein. Any holder of this document is advised that information contained hereon reflects the Company's findings at the time of its intervention only and within the limits of Client's instructions, if any. The Company's sole responsibility is to its Client and this document does not exonerate parties to a transaction from exercising all their rights and obligations under the transaction documents. This document cannot be reproduced except in full, without prior written approval of the Company. Any unauthorized alteration, forgery or falsification of the content or appearance of this document is unlawful and offenders may be prosecuted to the fullest extent of the law.
この試験報告書は裏面に記載された、もしくはhttp://www.sgs.comで入手が可能なサービスに関する一般的条件に則して発行されます。そちらに明記されている弊社の負うべき債務・補償の範囲及び司法管轄の項目をご注意ください。他に特に明記のない限り、この試験報告書に記載された結果は、試験したサンプルのみに属します。この書面全体の複製以外には、弊社からの事前の許可を得ること無く複製することを禁じます。この試験報告書を無断で変更、偽造、改ざんすることは違法であり、違反者に対しては法的手段を講じることとなります。

Table of contents

1 General information 3
1.1 Product information from applicant 3
1.2 Test(s) performed/ Summary of test result 3
1.3 Test facility 4
1.4 Measurement uncertainty 5
1.5 Summary of test results 5
1.6 Setup of equipment under test (EUT) 6
1.6.1 Test configuration of EUT 6
1.6.2 Operating condition: 6
1.6.3 Setup diagram of tested system 7
1.7 Equipment modifications 7
1.8 Deviation from the standard 7
2 Test procedure and test data 8
2.1 Radiated emissions 8
2.2 AC power line conducted emissions 12
3 Test setup photographs 14
3.1 Radiated emissions 14
3.2 AC power line conducted emissions 14
4 List of utilized test equipment / calibration 15

History

Report No.	Date	Revisions	Issued By
WE200713BB2-11	September 17, 2020	Initial Issue	K. Onishi

This document is issued by the Company subject to its General Conditions of Service accessible at http://www.sgs.com/en/Terms-and-Conditions.aspx. Attention is drawn to the limitation of liability, indemnification and jurisdiction issues defined therein. Any holder of this document is advised that information contained hereon reflects the Company's findings at the time of its intervention only and within the limits of Client's instructions, if any. The Company's sole responsibility is to its Client and this document does not exonerate parties to a transaction from exercising all their rights and obligations under the transaction documents. This document cannot be reproduced except in full, without prior written approval of the Company. Any unauthorized alteration, forgery or falsification of the content or appearance of this document is unlawful and offenders may be prosecuted to the fullest extent of the law.
この試験報告書は裏面に記載された、もしくはhttp://www.sgs.comで入手が可能なサービスに関する一般的条件に則して発行されます。そちらに明記されている弊社の負うべき債務・補償の範囲及び司法管轄の項目をご注意ください。他に特に明記のない限り、この試験報告書に記載された結果は、試験したサンプルのみに属します。この書面全体の複製以外には、弊社からの事前の許可を得ること無く複製することを禁じます。この試験報告書を無断で変更、偽造、改ざんすることは違法であり、違反者に対しては法的手段を講じることとなります。

1 General information

1.1 Product information from applicant

Test item	: Braille Labeler
Manufacturer	: KGS CORPORATION
Address	: 1004 OGAWA, OGAWA MACHI, SAITAMA 355-0321, JAPAN
Model	: BL-1000 LINK
FCC ID	: 2AXGX-BL1KL
Serial number	: PP100005
Highest operating frequency	: 48 MHz
Receipt date of EUT	: August 25, 2020
Nominal power source voltages	: AC 120V, 60Hz (AC adapter)

1.2 Test(s) performed/ Summary of test result

Test specification(s)	: FCC CFR 47. Part 15 subpart B (01 Oct. 2019)
Test method(s)	: ANSI C63.4: 2014
Test(s) started	: September 17, 2020
Test(s) completed	: September 17, 2020

Note: The above judgment is only based on the measurement data and it does not include the measurement uncertainty. Accordingly, the statement below is applied to the test result.
The EUT complies with the limit required in the standard in case that the margin is not less than the measurement uncertainty in the Laboratory.
Compliance of the EUT is more probable than non-compliance is case that the margin is less than the measurement uncertainty in the Laboratory.

Test engineer : K. Onishi
RF Operation RF/EMC Lab

Reviewer : Y. Taki
Manager
RF Operation RF/EMC Lab

This document is issued by the Company subject to its General Conditions of Service accessible at http://www.sgs.com/en/Terms-and-Conditions.aspx. Attention is drawn to the limitation of liability, indemnification and jurisdiction issues defined therein. Any holder of this document is advised that information contained hereon reflects the Company's findings at the time of its intervention only and within the limits of Client's instructions, if any. The Company's sole responsibility is to its Client and this document does not exonerate parties to a transaction from exercising all their rights and obligations under the transaction documents. This document cannot be reproduced except in full, without prior written approval of the Company. Any unauthorized alteration, forgery or falsification of the content or appearance of this document is unlawful and offenders may be prosecuted to the fullest extent of the law.
この試験報告書は裏面に記載された、もしくはhttp://www.sgs.comで入手が可能なサービスに関する一般的条件に則して発行されます。そちらに明記されている弊社の負うべき債務・補償の範囲及び司法管轄の項目をご注意ください。他に特に明記のない限り、この試験報告書に記載された結果は、試験したサンプルのみに属します。この書面全体の複製以外には、弊社からの事前の許可を得ること無く複製することを禁じます。この試験報告書を無断で変更、偽造、改ざんすることは違法であり、違反者に対しては法的手段を講じることとなります。

1.3 Test facility

[Yokohama Laboratory]

Address: 472, Nippa-cho, Kohoku-ku, Yokohama, 223-0057, Japan
TEL: +81-45-534-0645
FAX: +81-45-534-0646

Accredited by National Voluntary Laboratory Accreditation Program (NVLAP) for the emission tests stated in the scope of the certificate under Certificate Number 200780-0

Registered by Innovation, Science and Economic Development Canada (ISED):
The registered CAB identifier is JP0009.

Registered by Voluntary Control Council for Interference by Information Technology Equipment (VCCI)
Each registered facility number is as follows;
Test site A-0045

[Kitayamata laboratory]

Address: 3-5-23, Kitayamata, Tsuzuki-ku, Yokohama, 224-0021, Japan
TEL: +81-45-550-3520
FAX: +81-45-592-7506

Accredited by National Voluntary Laboratory Accreditation Program (NVLAP) for the emission tests stated in the scope of the certificate under Certificate Number 200780-0

Registered by Innovation, Science and Economic Development Canada (ISED):
The registered CAB identifier is JP0009.

Registered by Voluntary Control Council for Interference by Information Technology Equipment (VCCI)
Each registered facility number is as follows;
Test site A-0212

This report must not be used by the client to claim product certification, approval, or endorsement by NVLAP, NIST, or any agency of the US Government.

NVLAP®
TESTING
NVLAP LAB CODE 200780-0

This document is issued by the Company subject to its General Conditions of Service accessible at http://www.sgs.com/en/Terms-and-Conditions.aspx. Attention is drawn to the limitation of liability, indemnification and jurisdiction issues defined therein. Any holder of this document is advised that information contained hereon reflects the Company's findings at the time of its intervention only and within the limits of Client's instructions, if any. The Company's sole responsibility is to its Client and this document does not exonerate parties to a transaction from exercising all their rights and obligations under the transaction documents. This document cannot be reproduced except in full, without prior written approval of the Company. Any unauthorized alteration, forgery or falsification of the content or appearance of this document is unlawful and offenders may be prosecuted to the fullest extent of the law.
この試験報告書は裏面に記載された、もしくはhttp://www.sgs.comで入手が可能なサービスに関する一般的条件に則して発行されます。そちらに明記されている弊社の負うべき債務・補償の範囲及び司法管轄の項目をご注意ください。他に特に明記のない限り、この試験報告書に記載された結果は、試験したサンプルのみに属します。この書面全体の複製以外には、弊社からの事前の許可を得ること無く複製することを禁じます。この試験報告書を無断で変更、偽造、改ざんすることは違法であり、違反者に対しては法的手段を講じることとなります。

1.4 Measurement uncertainty

The treatment of uncertainty is based on the general matters on the definition of uncertainty in "Guide to the expression of uncertainty in measurement (GUM)" published by ISO. The Lab's uncertainty is determined by referring UKAS Publication LAB34: 2002 "The Expression of Uncertainty in EMC Testing" and CISPR16-4-2: 2011 "Uncertainty in EMC Measurements".
The uncertainty of the measurement result in the level of confidence of approximately 95% (k=2) is as follows;

Conducted emission : ± 3.3 dB (150 kHz - 30 MHz)
Radiated emission : ± 6.1 dB (30 MHz - 1000 MHz)

1.5 Summary of test results

Requirement	Section in FCC15B	Result	Section in this report
Radiated emissions (30 to 2000 MHz) (*)	15.109	Complied	2.1
AC power line conducted emissions	15.107	Complied	2.2

(*) The highest internal operating frequency is below 500 MHz

This document is issued by the Company subject to its General Conditions of Service accessible at http://www.sgs.com/en/Terms-and-Conditions.aspx. Attention is drawn to the limitation of liability, indemnification and jurisdiction issues defined therein. Any holder of this document is advised that information contained hereon reflects the Company's findings at the time of its intervention only and within the limits of Client's instructions, if any. The Company's sole responsibility is to its Client and this document does not exonerate parties to a transaction from exercising all their rights and obligations under the transaction documents. This document cannot be reproduced except in full, without prior written approval of the Company. Any unauthorized alteration, forgery or falsification of the content or appearance of this document is unlawful and offenders may be prosecuted to the fullest extent of the law.
この試験報告書は裏面に記載された、もしくはhttp://www.sgs.comで入手が可能なサービスに関する一般的条件に則して発行されます。そちらに明記されている弊社の負うべき債務・補償の範囲及び司法管轄の項目をご注意ください。他に特に明記のない限り、この試験報告書に記載された結果は、試験したサンプルのみに属します。この書面全体の複製以外には、弊社からの事前の許可を得ること無く複製することを禁じます。この試験報告書を無断で変更、偽造、改ざんすることは違法であり、違反者に対しては法的手段を講じることとなります。

1.6 Setup of equipment under test (EUT)

1.6.1 Test configuration of EUT

The test configuration of the EUT refers to following Tables.

Table: EUT

No.	Item	Model No.	Manufacture	Serial No.
A	Braille Labeler	BL-1000 LINK	KGS	PP100005

Table: Support equipment

No.	Item	Model No.	Manufacture	Serial No.
B	AC Adaptor	ATS024T-P150	ADAPTER TECH.	-
C	PC	R63/B	Toshiba	ZG081213H
D	AC Adaptor	PA5177U-1ACA	Toshiba	G71C000GX210
E	Hub	PA-WR8700N-HP	NEC	87N1111286973B0
F	AC Adaptor	AL1-002292-002	NEC	07109A174499
G	Mouse	MUS-UKT115BK	Nakabayashi	190901791

Table: Cable connected to the EUT

No.	Item	From	To	Length [m]	Shield	Ferrite Core
1	DC Output Cable 1	A	B	1.83	No	No
2	AC Power Cable 1	B	AC	1.50	No	No
3	USB Cable	A	C	1.80	Yes	No
4	DC Output Cable 2	C	D	1.80	No	No
5	AC Power Cable 2	D	AC	0.90	No	No
6	LAN Cable	C	E	2.00	No	No
7	DC Output Cable 3	E	F	1.30	No	No
8	AC Power Cable 3	F	AC	0.70	No	No

1.6.2 Operating condition:

- Normal Mode (Continuous Printing)

This document is issued by the Company subject to its General Conditions of Service accessible at http://www.sgs.com/en/Terms-and-Conditions.aspx. Attention is drawn to the limitation of liability, indemnification and jurisdiction issues defined therein. Any holder of this document is advised that information contained hereon reflects the Company's findings at the time of its intervention only and within the limits of Client's instructions, if any. The Company's sole responsibility is to its Client and this document does not exonerate parties to a transaction from exercising all their rights and obligations under the transaction documents. This document cannot be reproduced except in full, without prior written approval of the Company. Any unauthorized alteration, forgery or falsification of the content or appearance of this document is unlawful and offenders may be prosecuted to the fullest extent of the law.
この試験報告書は裏面に記載された、もしくはhttp://www.sgs.comで入手が可能なサービスに関する一般的条件に則して発行されます。そちらに明記されている弊社の負うべき債務・補償の範囲及び司法管轄の項目をご注意ください。他に特に明記のない限り、この試験報告書に記載された結果は、試験したサンプルのみに属します。この書面全体の複製以外には、弊社からの事前の許可を得ること無く複製することを禁じます。この試験報告書を無断で変更、偽造、改ざんすることは違法であり、違反者に対しては法的手段を講じることとなります。

1.6.3 Setup diagram of tested system

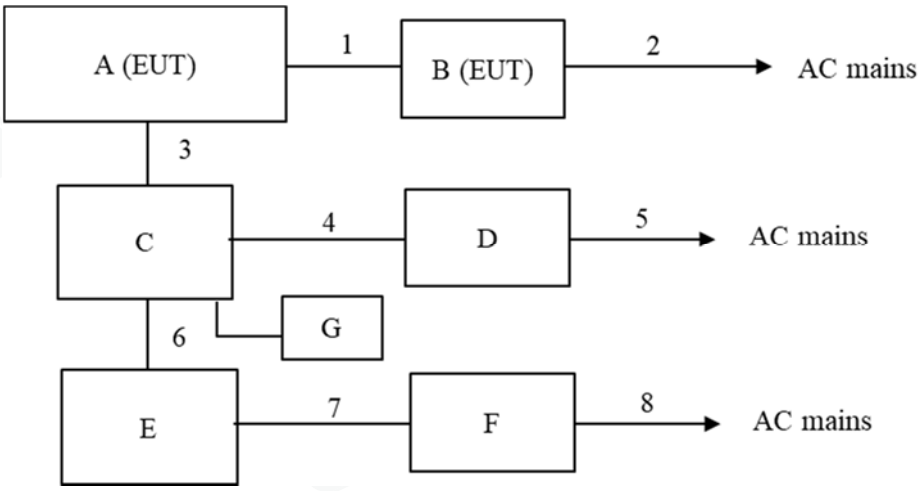

1.7 Equipment modifications

No modifications have been made to the equipment in order to achieve compliance with the applicable standards described in clause 1.2.

1.8 Deviation from the standard

No deviations from the standards described in clause 1.2.

This document is issued by the Company subject to its General Conditions of Service accessible at http://www.sgs.com/en/Terms-and-Conditions.aspx. Attention is drawn to the limitation of liability, indemnification and jurisdiction issues defined therein. Any holder of this document is advised that information contained hereon reflects the Company's findings at the time of its intervention only and within the limits of Client's instructions, if any. The Company's sole responsibility is to its Client and this document does not exonerate parties to a transaction from exercising all their rights and obligations under the transaction documents. This document cannot be reproduced except in full, without prior written approval of the Company. Any unauthorized alteration, forgery or falsification of the content or appearance of this document is unlawful and offenders may be prosecuted to the fullest extent of the law.
この試験報告書は裏面に記載された、もしくはhttp://www.sgs.comで入手が可能なサービスに関する一般的条件に則して発行されます。そちらに明記されている弊社の負うべき債務・補償の範囲及び司法管轄の項目をご注意ください。他に特に明記のない限り、この試験報告書に記載された結果は、試験したサンプルのみに属します。この書面全体の複製以外には、弊社からの事前の許可を得ること無く複製することを禁じます。この試験報告書を無断で変更、偽造、改ざんすることは違法であり、違反者に対しては法的手段を講じることとなります。

2 Test procedure and test data

2.1 Radiated emissions

Test setup

Test setup was implemented according to the method of ANSI C63.4: 2014 clause 6 “General requirements for EUT arrangements, configuration, and operation”, and clause 8 “Radiated emission measurements”.

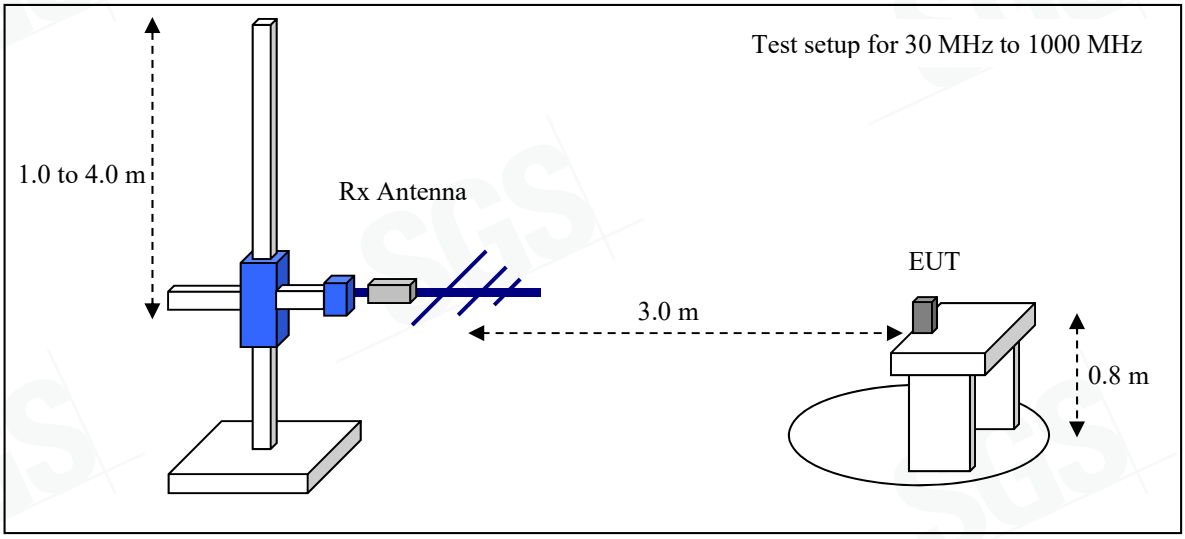

Test procedure

Measurement procedures were implemented according to the method of ANSI C63.4: 2014 clauses 8.3.
The EUT is place on a non-conducted table which is 0.8 m height from a ground plane and the measurement antenna to EUT distance is 3 meters. The turn table is rotated for 360 degrees to determine the maximum emission level.
The antenna height scanned between 1 m and 4 m, and the antenna rotated to repeat the measurements for both the horizontal and vertical antenna polarizations.

The spectrum analyzer and receiver are set to the followings;
Between 30 - 1000 MHz: RBW=100 kHz, VBW= 300 kHz (Final measurement: RBW=120 kHz (QP))
Above 1000 MHz: RBW=1 MHz, VBW= 1 MHz (Final measurement: RBW=1 MHz (PK/AV))

This document is issued by the Company subject to its General Conditions of Service accessible at http://www.sgs.com/en/Terms-and-Conditions.aspx. Attention is drawn to the limitation of liability, indemnification and jurisdiction issues defined therein. Any holder of this document is advised that information contained hereon reflects the Company's findings at the time of its intervention only and within the limits of Client's instructions, if any. The Company's sole responsibility is to its Client and this document does not exonerate parties to a transaction from exercising all their rights and obligations under the transaction documents. This document cannot be reproduced except in full, without prior written approval of the Company. Any unauthorized alteration, forgery or falsification of the content or appearance of this document is unlawful and offenders may be prosecuted to the fullest extent of the law.
この試験報告書は裏面に記載された、もしくはhttp://www.sgs.comで入手が可能なサービスに関する一般的条件に則して発行されます。そちらに明記されている弊社の負うべき債務・補償の範囲及び司法管轄の項目をご注意ください。他に特に明記のない限り、この試験報告書に記載された結果は、試験したサンプルのみに属します。この書面全体の複製以外には、弊社からの事前の許可を得ること無く複製することを禁じます。この試験報告書を無断で変更、偽造、改ざんすることは違法であり、違反者に対しては法的手段を講じることとなります。

Applicable rule and limitation

§15.109 (b) Radiated emission limits

Frequency [MHz]	Field Strength [µV/m]	Measurement Distance [m]	Field Strength [dBuV/m] @3m
30 – 88	100	3	40.0
88 –216	150	3	43.5
216 – 960	200	3	46.0
Above 960	500	3	53.9

In the emission table above, the tighter limit applies at the band edges

Test results - *Complied with requirement*

Test equipment used (refer to List of utilized test equipment)

AC01	BA07	CL11	CL38	CL39	DH06	PR12	PR21
TR06	-	-	-	-	-	-	-

Test software used

EMI1 Ver. 6.1

Calculation method

The Correction Factor and Result are calculated as followings.

Correction Factor [dB/m] = Ant. Factor [dB/m] + Loss [dB] – Gain [dB]
Result [dBµV/m] = Reading [dBµV] + Correction Factor [dB/m]

This document is issued by the Company subject to its General Conditions of Service accessible at http://www.sgs.com/en/Terms-and-Conditions.aspx. Attention is drawn to the limitation of liability, indemnification and jurisdiction issues defined therein. Any holder of this document is advised that information contained hereon reflects the Company's findings at the time of its intervention only and within the limits of Client's instructions, if any. The Company's sole responsibility is to its Client and this document does not exonerate parties to a transaction from exercising all their rights and obligations under the transaction documents. This document cannot be reproduced except in full, without prior written approval of the Company. Any unauthorized alteration, forgery or falsification of the content or appearance of this document is unlawful and offenders may be prosecuted to the fullest extent of the law.
この試験報告書は裏面に記載された、もしくはhttp://www.sgs.comで入手が可能なサービスに関する一般的条件に則して発行されます。そちらに明記されている弊社の負うべき債務・補償の範囲及び司法管轄の項目をご注意ください。他に特に明記のない限り、この試験報告書に記載された結果は、試験したサンプルのみに属します。この書面全体の複製以外には、弊社からの事前の許可を得ること無く複製することを禁じます。この試験報告書を無断で変更、偽造、改ざんすることは違法であり、違反者に対しては法的手段を講じることとなります。

Test Data (30 - 1000 MHz)

Test site: Yokohama Laboratory
Measurement distance: 3 m

[Emission level]

No.	Frequency [MHz]	Reading [dBµV]	Factor [dB/m]	Loss [dB]	Gain [dB]	Result [dBµV/m]	Limit [dBµV/m]	Margin [dB]	Ant.
1	125.000	49.2	12.8	8.0	30.2	39.8	43.5	3.7	Hori.
2	37.903	38.7	18.7	6.9	30.4	33.9	40.0	6.1	Vert.
3	85.502	47.7	8.0	7.6	30.3	33.0	40.0	7.0	Vert.
4	98.353	49.9	10.2	7.7	30.2	37.6	43.5	5.9	Vert.
5	117.485	47.1	12.5	7.9	30.2	37.3	43.5	6.2	Vert.
6	**124.999**	**50.3**	**12.8**	**8.0**	**30.2**	**40.9**	**43.5**	**2.6**	**Vert.**

[Chart]

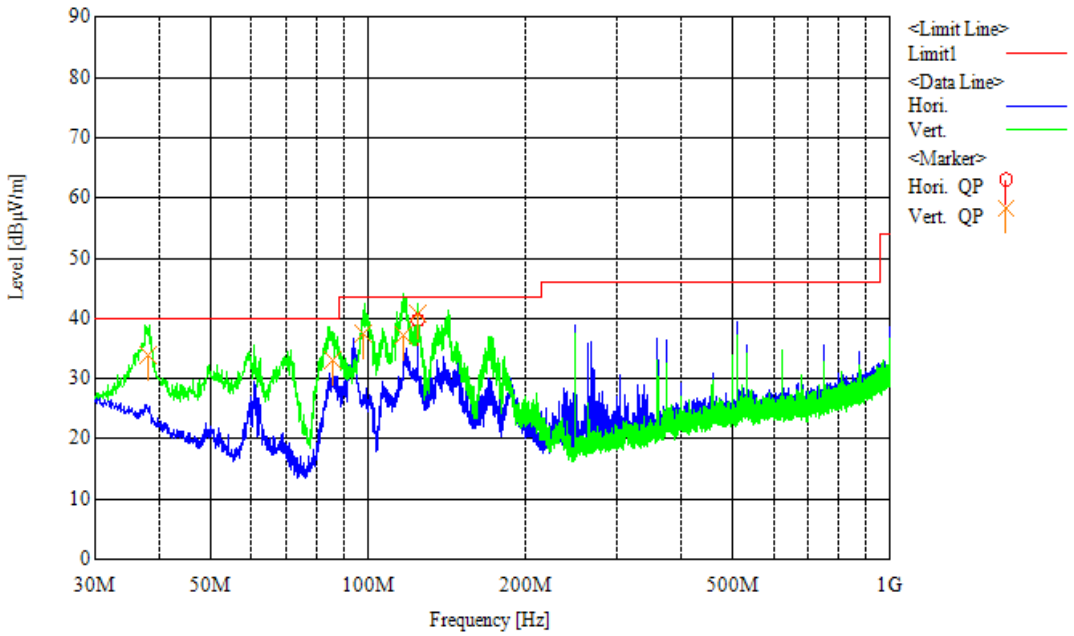

[Test condition]

Tested Date: September 17, 2020 Temperature: 21 degC
Humidity: 65 % Atmos. Press: 1014 hPa

This document is issued by the Company subject to its General Conditions of Service accessible at http://www.sgs.com/en/Terms-and-Conditions.aspx. Attention is drawn to the limitation of liability, indemnification and jurisdiction issues defined therein. Any holder of this document is advised that information contained hereon reflects the Company's findings at the time of its intervention only and within the limits of Client's instructions, if any. The Company's sole responsibility is to its Client and this document does not exonerate parties to a transaction from exercising all their rights and obligations under the transaction documents. This document cannot be reproduced except in full, without prior written approval of the Company. Any unauthorized alteration, forgery or falsification of the content or appearance of this document is unlawful and offenders may be prosecuted to the fullest extent of the law.
この試験報告書は裏面に記載された、もしくはhttp://www.sgs.comで入手が可能なサービスに関する一般的条件に則して発行されます。そちらに明記されている弊社の負うべき債務・補償の範囲及び司法管轄の項目をご注意ください。他に特に明記のない限り、この試験報告書に記載された結果は、試験したサンプルのみに属します。この書面全体の複製以外には、弊社からの事前の許可を得ること無く複製することを禁じます。この試験報告書を無断で変更、偽造、改ざんすることは違法であり、違反者に対しては法的手段を講じることとなります。

Test Data (above 1000 MHz)

Frequency range: 1000 - 2000 MHz (240MHz of USB 2.0 interface)
Test site: Yokohama Laboratory
Measurement distance: 3 m

[Emission level]

No.	Frequency [MHz]	Reading PK [dBμV]	Reading Ave [dBμV]	C.Factor [dB]	Result PK [dBμV/m]	Result Ave [dBμV/m]	Limit PK [dBμV/m]	Limit Ave [dBμV/m]	Margin PK [dB]	Margin Ave [dB]	Ant.
1	1249.999	53.3	43.9	-9.5	43.8	34.4	73.9	53.9	30.1	19.5	Hori.
2	1359.891	57.3	44.7	-9.1	48.2	35.6	73.9	53.9	25.7	18.3	Hori.
3	1249.999	52.8	44.7	-9.5	43.3	35.2	73.9	53.9	30.6	18.7	Vert.
4	1359.891	59.6	46.7	-9.1	50.5	37.6	73.9	53.9	23.4	16.3	Vert.

[Chart]

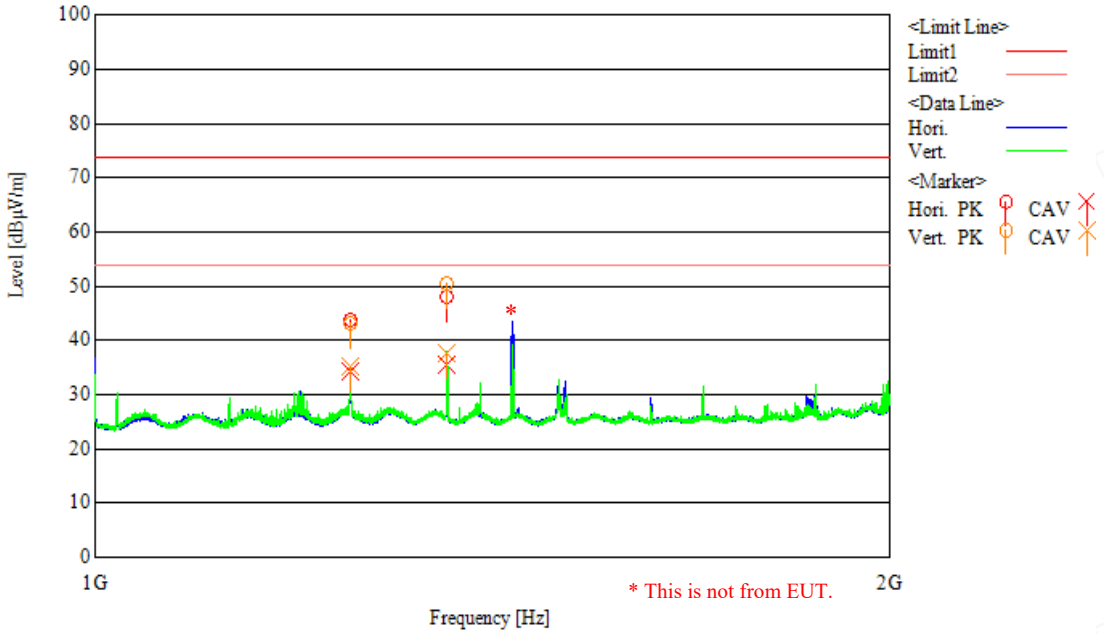

[Test condition]

Tested Date: September 17, 2020 Temperature: 21 degC
Humidity: 65 % Atmos. Press: 1014 hPa

This document is issued by the Company subject to its General Conditions of Service accessible at http://www.sgs.com/en/Terms-and-Conditions.aspx. Attention is drawn to the limitation of liability, indemnification and jurisdiction issues defined therein. Any holder of this document is advised that information contained hereon reflects the Company's findings at the time of its intervention only and within the limits of Client's instructions, if any. The Company's sole responsibility is to its Client and this document does not exonerate parties to a transaction from exercising all their rights and obligations under the transaction documents. This document cannot be reproduced except in full, without prior written approval of the Company. Any unauthorized alteration, forgery or falsification of the content or appearance of this document is unlawful and offenders may be prosecuted to the fullest extent of the law.
この試験報告書は裏面に記載された、もしくはhttp://www.sgs.comで入手が可能なサービスに関する一般的条件に則して発行されます。そちらに明記されている弊社の負うべき債務・補償の範囲及び司法管轄の項目をご注意ください。他に特に明記のない限り、この試験報告書に記載された結果は、試験したサンプルのみに属します。この書面全体の複製以外には、弊社からの事前の許可を得ること無く複製することを禁じます。この試験報告書を無断で変更、偽造、改ざんすることは違法であり、違反者に対しては法的手段を講じることとなります。

2.2 AC power line conducted emissions

Test setup

Test setup was implemented according to the method of ANSI C63.4: 2014 clause 6 "General requirements for EUT arrangements, configuration and operation" and clause 7 "AC power-line conducted emission measurements".

Test procedure

Measurement procedures were implemented according to the method of ANSI C63.4: 2014 clauses 7.3.
Exploratory measurements were used the spectrum analyzer to identify the frequency of the emission that has the highest amplitude relative to the limit by operating the EUT in a range of typical modes of operation, cable positions, and with a typical system equipment configuration and arrangement.
Final ac power line conducted emission measurements were performed based on the exploratory tests.
The EUT cable configuration and arrangement and mode of operation that produced the emission with the highest amplitude relative to the limit are selected for the final measurement.
When the measurement value is greater than average limitation the average detection measurements were performed.

Applicable rule and limitation

§15.107 (b) AC power line conducted limits

Frequency of Emission [MHz]	Conducted emissions Limit [dBμV]	
	Quasi-peak	Average
0.15 - 0.5	66 to 56 *	56 to 46 *
0.5 - 5	56	46
5 - 30	60	50

* Decreases with the logarithm of the frequency. The lower limit applies at the band edges.

Test equipment used (refer to List of utilized test equipment)

CL18	LN05	TR09	-

Test software used

EMI1 Ver. 6.1

Calculation method

The Correction Factor and Result are calculated as followings.

Correction Factor [dB] = LISN Factor [dB] + Loss [dB]
Result [dBμV] = Reading [dBμV] + Correction Factor [dB]

Test results - *Complied with requirement*

This document is issued by the Company subject to its General Conditions of Service accessible at http://www.sgs.com/en/Terms-and-Conditions.aspx. Attention is drawn to the limitation of liability, indemnification and jurisdiction issues defined therein. Any holder of this document is advised that information contained hereon reflects the Company's findings at the time of its intervention only and within the limits of Client's instructions, if any. The Company's sole responsibility is to its Client and this document does not exonerate parties to a transaction from exercising all their rights and obligations under the transaction documents. This document cannot be reproduced except in full, without prior written approval of the Company. Any unauthorized alteration, forgery or falsification of the content or appearance of this document is unlawful and offenders may be prosecuted to the fullest extent of the law.
この試験報告書は裏面に記載された、もしくはhttp://www.sgs.comで入手が可能なサービスに関する一般的条件に則して発行されます。そちらに明記されている弊社の負うべき債務・補償の範囲及び司法管轄の項目をご注意ください。他に特に明記のない限り、この試験報告書に記載された結果は、試験したサンプルのみに属します。この書面全体の複製以外には、弊社からの事前の許可を得ること無く複製することを禁じます。この試験報告書を無断で変更、偽造、改ざんすることは違法であり、違反者に対しては法的手段を講じることとなります。

Test Data

Test location: Yokohama laboratory (Y2 shield room)

No.	Frequency [MHz]	Reading		C.F. [dB]	Result		Limit		Margin		Phase
		QP [dBuV]	AV [dBuV]		QP [dBuV]	AV [dBuV]	QP [dBuV]	AV [dBuV]	QP [dB]	AV [dB]	
1	0.15017	41.9	23.7	10.2	52.1	33.9	66.0	56.0	13.9	22.1	Va
2	0.15782	39.3	22.8	10.2	49.5	33.0	65.6	55.6	16.1	22.6	Va
3	0.16887	39.1	20.9	10.2	49.3	31.1	65.0	55.0	15.7	23.9	Va
4	**0.17991**	**42.4**	**24.2**	**10.2**	**52.6**	**34.4**	**64.5**	**54.5**	**11.9**	**20.1**	**Va**
5	0.19419	40.6	25.4	10.1	50.7	35.5	63.9	53.9	13.2	18.4	Va
6	14.31514	31.8	20.5	10.3	42.1	30.8	60.0	50.0	17.9	19.2	Va
7	0.15153	41.2	24.3	10.2	51.4	34.5	65.9	55.9	14.5	21.4	Vb
8	0.18552	41.6	26.7	10.2	51.8	36.9	64.2	54.2	12.4	17.3	Vb
9	0.24501	37.1	22.4	10.1	47.2	32.5	61.9	51.9	14.7	19.4	Vb
10	0.25725	35.8	22.6	10.1	45.9	32.7	61.5	51.5	15.6	18.8	Vb
11	13.94321	30.6	20.1	10.3	40.9	30.4	60.0	50.0	19.1	19.6	Vb

[Chart]

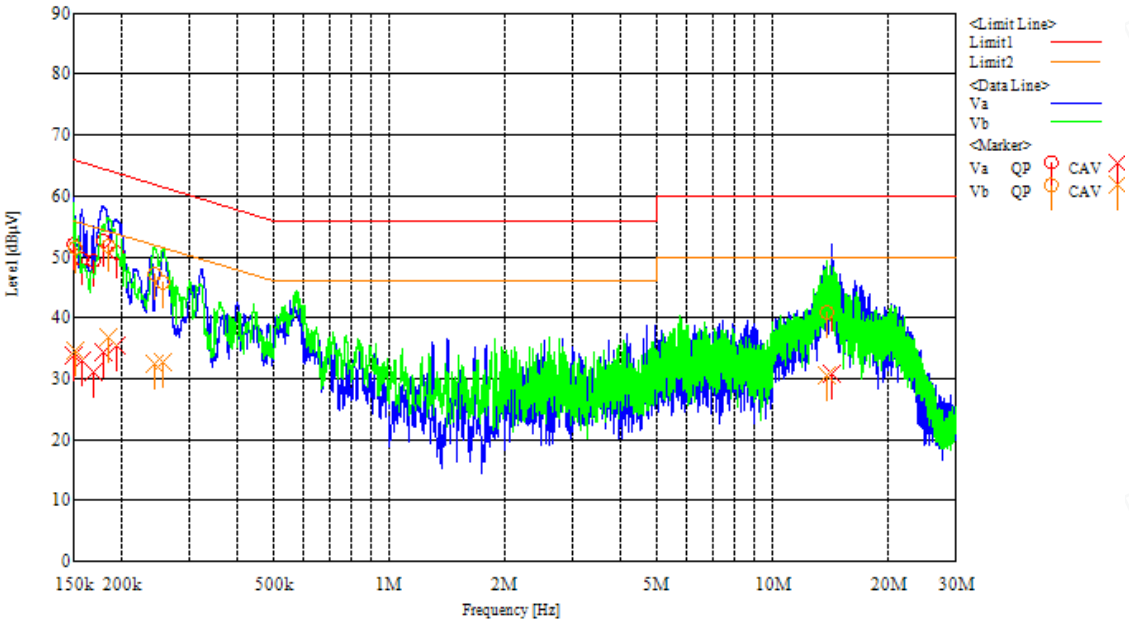

[Test condition]

Tested Date: September 17, 2020 Temperature: 21 degC
Humidity: 65 % Atmos. Press: 1014 hPa

This document is issued by the Company subject to its General Conditions of Service accessible at http://www.sgs.com/en/Terms-and-Conditions.aspx. Attention is drawn to the limitation of liability, indemnification and jurisdiction issues defined therein. Any holder of this document is advised that information contained hereon reflects the Company's findings at the time of its intervention only and within the limits of Client's instructions, if any. The Company's sole responsibility is to its Client and this document does not exonerate parties to a transaction from exercising all their rights and obligations under the transaction documents. This document cannot be reproduced except in full, without prior written approval of the Company. Any unauthorized alteration, forgery or falsification of the content or appearance of this document is unlawful and offenders may be prosecuted to the fullest extent of the law.
この試験報告書は裏面に記載された、もしくはhttp://www.sgs.comで入手が可能なサービスに関する一般的条件に則して発行されます。そちらに明記されている弊社の負うべき債務・補償の範囲及び司法管轄の項目をご注意ください。他に特に明記のない限り、この試験報告書に記載された結果は、試験したサンプルのみに属します。この書面全体の複製以外には、弊社からの事前の許可を得ること無く複製することを禁じます。この試験報告書を無断で変更、偽造、改ざんすることは違法であり、違反者に対しては法的手段を講じることとなります。

4 List of utilized test equipment / calibration

RFT ID No.	Kind of Equipment and Precision	Manufacturer	Model No.	Serial Number	Calibration Date	Calibrated until
AC01(EM)	Anechoic Chamber (1st test room)	JSE	203397C	-	2020/04/17	2021/04/30
AC01(EG)	Anechoic Chamber (1st test room)	JSE	203397C	-	2020/03/28	2021/03/31
BA07	Bilogical Antenna	TESEQ	CBL6143A	26670	2019/12/09	2020/12/31
CL11	RF Cable for RE	RFT	-	-	2020/03/25	2021/03/31
CL18	RF Cable for CE	RFT	-	-	2020/03/25	2021/03/31
CL38	RF Cable 2 m	Junkosha	MWX221	1603S626	2020/01/30	2021/01/31
CL39	RF Cable 5 m	SUHNER	SUCOFLEX126E	523222	2020/02/03	2021/02/28
DH06	DRG Horn Antenna	A.H. Systems	SAS-571	1339	2020/06/27	2022/06/30
LN05	LISN	Kyoritsu	KNW-407F	8-1773-2	2020/05/19	2021/05/31
PR12	Pre. Amplifier (1-26G)	Agilent Technologies	8449B	3008A02513	2020/01/29	2021/01/31
PR21	Pre. Amplifier	Anritsu	MH648A	6200467119	2019/12/03	2020/12/31
TR06	Test Receiver (F/W : 4.73 SP4)	Rohde & Schwarz	ESU26	100002	2019/10/07	2020/10/31
TR09	Test Receiver (F/W : 4.43 SP3)	Rohde & Schwarz	ESU8	100386	2020/06/23	2021/06/30

The measuring equipment, which was utilized in performing the tests documented herein, has been calibrated in accordance with the manufacturer's recommendations for utilizing calibration equipment, which is traceable to recognized national standards.

This document is issued by the Company subject to its General Conditions of Service accessible at http://www.sgs.com/en/Terms-and-Conditions.aspx. Attention is drawn to the limitation of liability, indemnification and jurisdiction issues defined therein. Any holder of this document is advised that information contained hereon reflects the Company's findings at the time of its intervention only and within the limits of Client's instructions, if any. The Company's sole responsibility is to its Client and this document does not exonerate parties to a transaction from exercising all their rights and obligations under the transaction documents. This document cannot be reproduced except in full, without prior written approval of the Company. Any unauthorized alteration, forgery or falsification of the content or appearance of this document is unlawful and offenders may be prosecuted to the fullest extent of the law.
この試験報告書は裏面に記載された、もしくはhttp://www.sgs.comで入手が可能なサービスに関する一般的条件に則して発行されます。そちらに明記されている弊社の負うべき債務・補償の範囲及び司法管轄の項目をご注意ください。他に特に明記のない限り、この試験報告書に記載された結果は、試験したサンプルのみに属します。この書面全体の複製以外には、弊社からの事前の許可を得ること無く複製することを禁じます。この試験報告書を無断で変更、偽造、改ざんすることは違法であり、違反者に対しては法的手段を講じることとなります。