BCTC 倍测检测

TEST REPORT

Report No:	BCTC2009000217E
Applicant:	SHENZHEN FYF SCIENCE AND TECHNOLOGY CO., LTD.
Product Name:	LED CONTROLLER
Product Type:	PGS-BT-001
Tested Date:	Sep. 04, 2020 to Sep. 09, 2020
Issued Date:	Sep. 09, 2020

Shenzhen BCTC Testing Co., Ltd.

FCC ID:2AXI4PGS-BT-001

Product Name:	LED CONTROLLER
Trademark:	PARADISE GRILLS
Model/Type Ref.:	PGS-BT-001 PGS-BT-002
Prepared For:	SHENZHEN FYF SCIENCE AND TECHNOLOGY CO., LTD.
Address:	4/F, BLDG 2, NO. 515 ZHOUSHI ROAD, HUANGMABU, BAOAN, SHENZHEN, CHINA
Manufacturer:	SHENZHEN FYF SCIENCE AND TECHNOLOGY CO., LTD.
Address:	4/F, BLDG 2, NO. 515 ZHOUSHI ROAD, HUANGMABU, BAOAN, SHENZHEN, CHINA
Prepared By:	Shenzhen BCTC Testing Co., Ltd.
Address:	1-2F, East of B Building, Pengzhou Industrial, Fuyuan 1st Road, Qiaotou Community, Fuyong Street, Bao'an District, Shenzhen, China
Sample Received Date:	Sep. 04, 2020
Sample tested Date:	Sep. 04, 2020 to Sep. 09, 2020
Issue Date:	Sep. 09, 2020
Report No.:	BCTC2009000217E
Test Standards	FCC Part15.247 ANSI C63.10-2013
Test Results	PASS
Remark:	This is Bluetooth BLE radio test report.

Compiled by:	*Reviewed by:*	*Approved by:*
Kelsey Tan	Eric Yang	Zero Zhou/Manager

The test report is effective only with both signature and specialized stamp.This result(s) shown in this report refer only to the sample(s) tested. Without written approval of Shenzhen BCTC Testing Co., Ltd, this report can't be reproduced except in full.The tested sample(s) and the sample information are provided by the client.

TABLE OF CONTENT

Test Report Declaration Page
1. VERSION 5
2. TEST SUMMARY 6
3. MEASUREMENT UNCERTAINTY 7
4. PRODUCT INFORMATION AND TEST SETUP 8
4.1 Product Information 8
4.2 Test Setup Configuration 8
4.3 Support Equipment 8
4.4 Channel List 9
4.5 Test Mode 9
4.6 Table of parameters of text software setting 9
5. TEST FACILITY AND TEST INSTRUMENT USED 10
5.1 Test Facility 10
5.2 Test Instrument Used 11
6. CONDUCTED EMISSIONS 12
6.1 Block Diagram Of Test Setup 12
6.2 Limit 12
6.3 Test procedure 12
6.4 EUT operating Conditions 12
6.5 Test Result 13
7. RADIATED EMISSIONS 14
7.1 Block Diagram Of Test Setup 14
7.2 Limit 15
7.3 Test procedure 16
7.4 EUT operating Conditions 17
7.5 Test Result 18
8. RADIATED BAND EMISSION MEASUREMENT AND RESTRICTED BANDS OF OPERATION 22
8.1 Block Diagram Of Test Setup 22
8.2 Limit 22
8.3 Test procedure 23
8.4 EUT operating Conditions 23
8.5 Test Result 24
9. POWER SPECTRAL DENSITY TEST 25
9.1 Block Diagram Of Test Setup 25
9.2 Limit 25
9.3 Test procedure 25
9.4 EUT operating Conditions 25
9.5 Test Result 26
10. BANDWIDTH TEST 28
10.1 Block Diagram Of Test Setup 28
10.2 Limit 28
10.3 Test procedure 28

10.4 EUT operating Conditions....28
10.5 Test Result....29
11. PEAK OUTPUT POWER TEST....31
11.1 Block Diagram Of Test Setup....31
11.2 Limit....31
11.3 Test procedure....31
11.4 EUT operating Conditions....31
11.5 Test Result....32
12. 100 KHZ BANDWIDTH OF FREQUENCY BAND EDGE....33
12.1 Block Diagram Of Test Setup....33
12.2 Limit....33
12.3 Test procedure....33
12.4 EUT operating Conditions....33
12.5 Test Result....34
13. ANTENNA REQUIREMENT....36
13.1 Limit....36
13.2 Test Result....36
14. EUT PHOTOGRAPHS....37
15. EUT TEST SETUP PHOTOGRAPHS....38

(Note: N/A means not applicable)

1. VERSION

Report No.	Issue Date	Description	Approved
BCTC2009000217E	Sep. 09, 2020	Original	Valid

2. TEST SUMMARY

The Product has been tested according to the following specifications:

No.	Test Parameter	Clause No	Results
1	Conducted Emission	15.207	N/A
2	6dB Bandwidth	15.247 (a)(2)	PASS
3	Peak Output Power	15.247 (b)	PASS
4	Radiated Spurious Emission	15.247 (d), 15.205	PASS
5	Power Spectral Density	15.247 (e)	PASS
6	Restricted Band of Operation	15.205	PASS
7	Band Edge (Out of Band Emissions)	15.247(d)	PASS
8	Antenna Requirement	15.203	PASS

3. MEASUREMENT UNCERTAINTY

Where relevant, the following measurement uncertainty levels have been estimated for tests performed on the Product as specified in CISPR 16-4-2. This uncertainty represents an expanded uncertainty expressed at approximately the 95% confidence level using a coverage factor of k=2.

No.	Item	Uncertainty
1	3m camber Radiated spurious emission(30MHz-1GHz)	U=4.3dB
2	3m chamber Radiated spurious emission(1GHz-18GHz)	U=4.5dB
3	3m chamber Radiated spurious emission(18GHz-40GHz)	U=3.34dB
4	Conducted Adjacent channel power	U=1.38dB
5	Conducted output power uncertainty Above 1G	U=1.576dB
6	Conducted output power uncertainty below 1G	U=1.28dB
7	humidity uncertainty	U=5.3%
8	Temperature uncertainty	U=0.59℃

4. PRODUCT INFORMATION AND TEST SETUP

4.1 Product Information

Model/Type Ref.:	PGS-BT-001 PGS-BT-002
Model Description:	All the model are the same circuit and RF module, except model names.
Bluetooth Version:	BT 4.2
Hardware Version:	SHY-BASIC-MINI-V21
Software Version:	P30-Y86-BASIC-IR-V1.3R3021
Operation Frequency:	Bluetooth: 2402-2480MHz
Type of Modulation:	Bluetooth: GFSK
Number Of Channel	40CH
Antenna installation:	Bluetooth: PCB antenna
Antenna Gain:	Bluetooth: 0dBi
Ratings:	DC 12V

4.2 Test Setup Configuration

See test photographs attached in *EUT TEST SETUP PHOTOGRAPHS* for the actual connections between Product and support equipment.

Radiated Spurious Emission

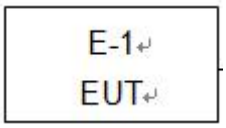

4.3 Support Equipment

No.	Device Type	Brand	Model	Series No.	Data Cable	Power Cord
E-1	LED CONTROLLER	PARADISE GRILLS	PGS-BT-001	N/A	EUT	E-1

Notes:

1. All the equipment/cables were placed in the worst-case configuration to maximize the emission during the test.
2. Grounding was established in accordance with the manufacturer's requirements and conditions for the intended use.

4.4 Channel List

Channel List					
Channel	Frequency (MHz)	Channel	Frequency (MHz)	Channel	Frequency (MHz)
01	2402	11	2422	21	2442
02	2404	12	2424	22	2444
03	2406	13	2426	23	2446
~	~	~	~	~	~
09	2418	19	2438	39	2478
10	2420	20	2440	40	2480

4.5 Test Mode

To investigate the maximum EMI emission characteristics generates from EUT, the test system was pre-scanning tested base on the consideration of following EUT operation mode or test configuration mode which possible have effect on EMI emission level. Each of these EUT operation mode(s) or test configuration mode(s) mentioned above was evaluated respectively.

For All Mode	Description	Modulation Type
Mode 1	CH01	GFSK
Mode 2	CH20	
Mode 3	CH40	
Mode 4	Link mode (Radiated emission)	

Note:

(1) The measurements are performed at the highest, middle, lowest available channels.

(2) Fully-charged battery is used during the test

4.6 Table of parameters of text software setting

During testing channel & power controlling software provided by the customer was used to control the operating channel as well as the output power level. The RF output power selection is for the setting of RF output power expected by the customer and is going to be fixed on the firmware of the final end product power parameters

Test software Version	Pixart BLE Utility		
Frequency	2402 MHz	2440 MHz	2480 MHz
Parameters	DEF	DEF	DEF

5. TEST FACILITY AND TEST INSTRUMENT USED

5.1 Test Facility

All measurement facilities used to collect the measurement data are located at 1-2F, East of B Building, Pengzhou Industrial, Fuyuan 1st Road, Qiaotou Community, Fuyong Street, Bao'an District, Shenzhen, China. The site and apparatus are constructed in conformance with the requirements of ANSI C63.4 and CISPR 16-1-1 other equivalent standards.

FCC Test Firm Registration Number: 712850

IC Registered No.: 23583

5.2 Test Instrument Used

Radiated emissions Test (966 chamber)					
Equipment	**Manufacturer**	**Model#**	**Serial#**	**Last Cal.**	**Next Cal.**
966 chamber	ChengYu	966 Room	966	Jun. 06. 2020	Jun. 05, 2023
Receiver	R&S	ESR3	102075	Jun. 08, 2020	Jun. 07, 2021
Receiver	R&S	ESRP	101154	Jun. 08, 2020	Jun. 07, 2021
Amplifier	Schwarzbeck	BBV9718	9718-309	Jun. 04, 2020	Jun. 03, 2021
Amplifier	Schwarzbeck	BBV9744	9744-0037	Jun. 04, 2020	Jun. 03, 2021
TRILOG Broadband Antenna	schwarzbeck	VULB 9163	VULB9163 -942	Jun. 08, 2020	Jun. 07, 2021
Horn Antenna	SCHWARZBECK	BBHA9120 D	1541	Jun. 10, 2020	Jun. 09, 2021
Horn Antenna (18GHz-40 GHz)	SCHWARZBECK	BBHA9170	822	Jun. 10, 2020	Jun. 09, 2021
Amplifier (18GHz-40 GHz)	MITEQ	TTA1840-35-HG	2034381	Jun. 08, 2020	Jun. 07, 2021
Loop Antenna (9KHz-30MHz)	SCHWARZBECK	FMZB1519 B	014	Jun. 08, 2020	Jun. 07, 2021
RF cables1 (9kHz-30MHz)	Huber+Suhnar	9kHz-30MHz	B1702988-0008	Jun. 08, 2020	Jun. 07, 2021
RF cables2 (30MHz-1GHz)	Huber+Suhnar	30MHz-1GHz	1486150	Jun. 08, 2020	Jun. 07, 2021
RF cables3 (1GHz-40GHz)	Huber+Suhnar	1GHz-40GHz	1607106	Jun. 08, 2020	Jun. 07, 2021
Power Metter	Keysight	E4419B	\	Jun. 08, 2020	Jun. 07, 2021
Power Sensor (AV)	Keysight	E9 300A	\	Jun. 08, 2020	Jun. 07, 2021
Signal Analyzer 20kHz-26.5 GHz	KEYSIGHT	N9020A	MY49100060	Jun. 04, 2020	Jun. 03, 2021
Spectrum Analyzer 9kHz-40GHz	Agilent	FSP40	100363	Jun. 08, 2020	Jun. 07, 2021
Software	Frad	EZ-EMC	FA-03A2 RE	\	\

6. CONDUCTED EMISSIONS

6.1 Block Diagram Of Test Setup

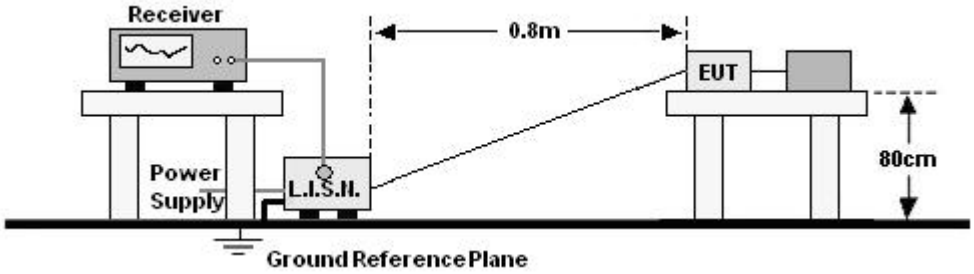

6.2 Limit

FREQUENCY (MHz)	Limit (dBuV)	
	Quas-peak	Average
0.15 -0.5	66 - 56 *	56 - 46 *
0.50 -5.0	56.00	46.00
5.0 -30.0	60.00	50.00

Notes:
1. *Decreasing linearly with logarithm of frequency.
2. The lower limit shall apply at the transition frequencies.

6.3 Test procedure

Receiver Parameters	Setting
Attenuation	10 dB
Start Frequency	0.15 MHz
Stop Frequency	30 MHz
IF Bandwidth	9 kHz

a. The Product was placed on a nonconductive table 0.8 m above the horizontal ground reference plane, and 0.4 m from the vertical ground reference plane, and connected to the main through Line Impedance Stability Network (L.I.S.N).

b. The RBW of the receiver was set at 9 kHz in 150 kHz ~ 30MHz with Peak and AVG detector in Max Hold mode. Run the receiver's pre-scan to record the maximum disturbance generated from Product in all power lines in the full band.

c. For each frequency whose maximum record was higher or close to limit, measure its QP and AVG values and record.

6.4 EUT operating Conditions

The EUT was configured for testing in a typical fashion (as a customer would normally use it). The EUT has been programmed to continuously transmit during test. This operating condition was tested and used to collect the included data.

6.5 Test Result

This EUT is powered by the DC only, this test item is not applicable.

7. RADIATED EMISSIONS

7.1 Block Diagram Of Test Setup

（A）Radiated Emission Test-Up Frequency Below 30MHz

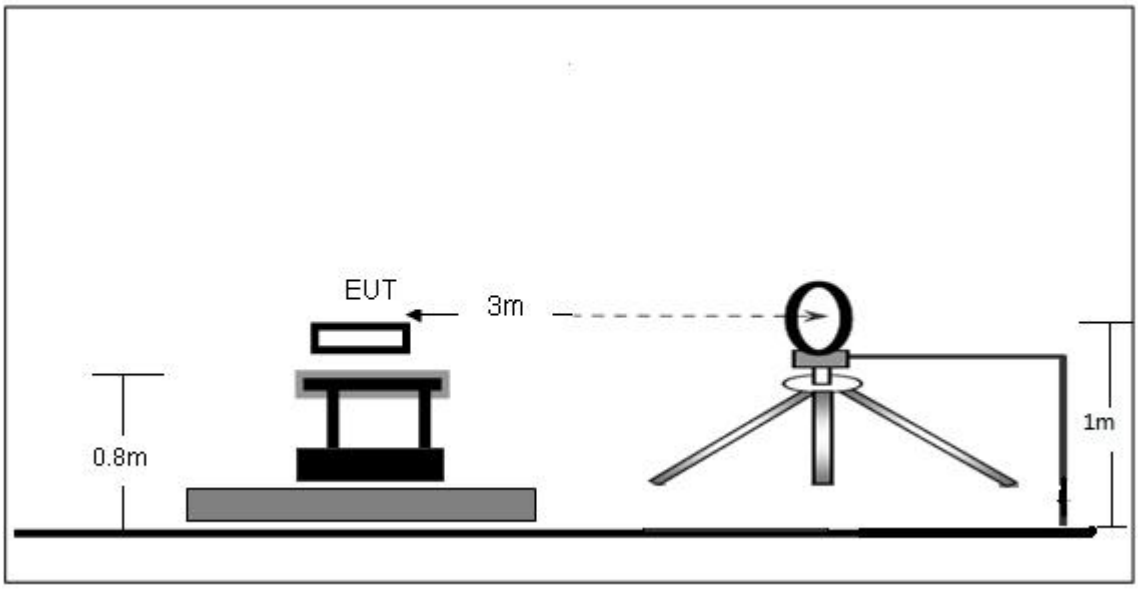

（B）Radiated Emission Test-Up Frequency 30MHz~1GHz

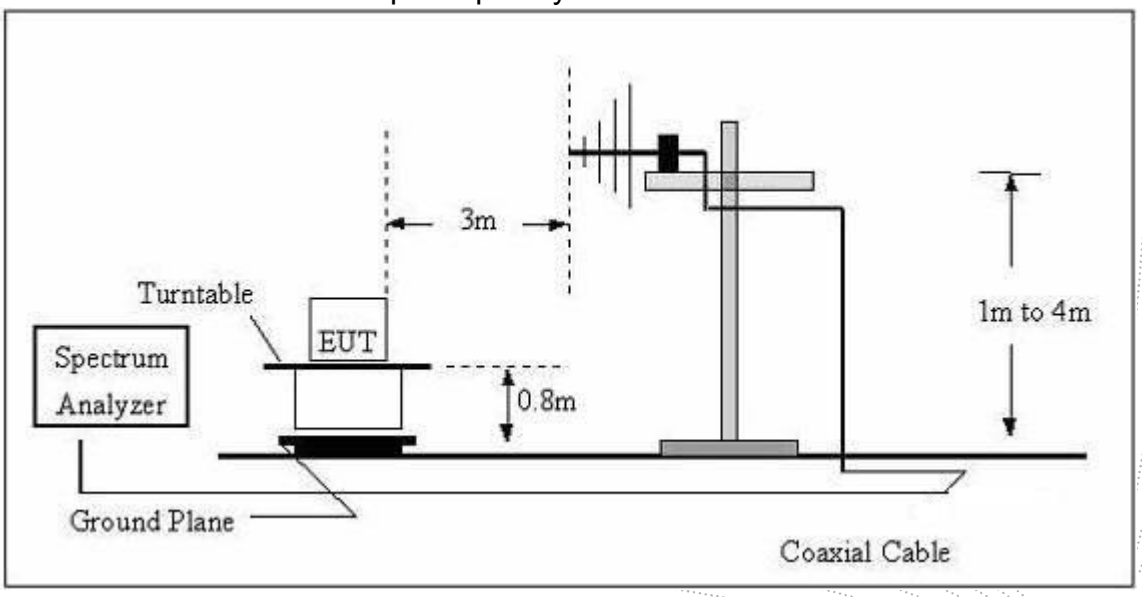

（C）Radiated Emission Test-Up Frequency Above 1GHz

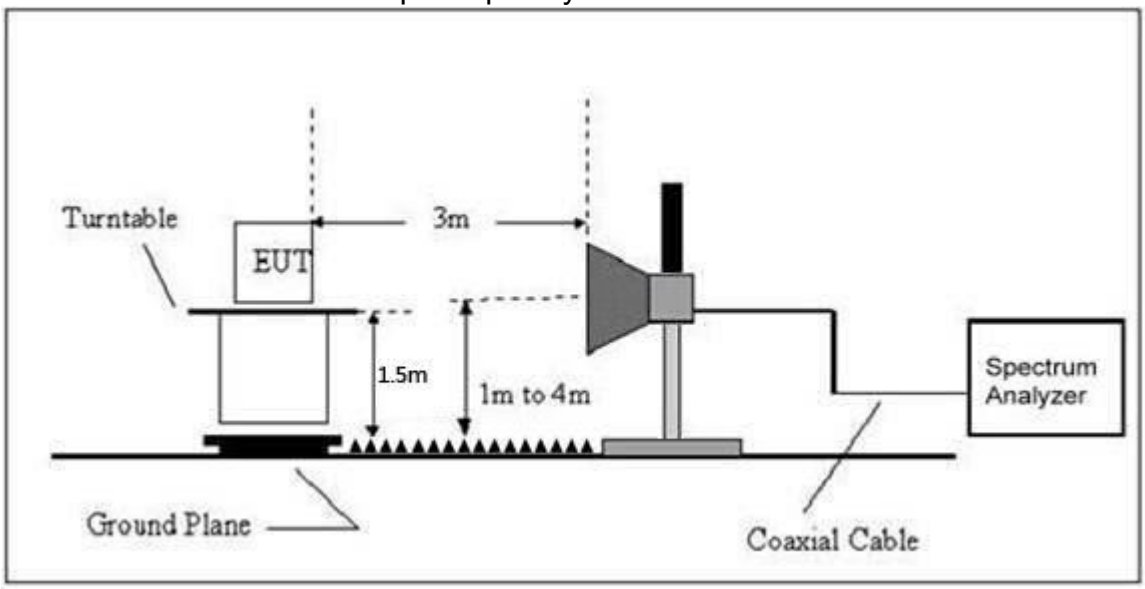

7.2 Limit

20dBc in any 100 kHz bandwidth outside the operating frequency band. In case the emission fall within the restricted band specified on 15.205(a), then the 15.209(a) limit in the table below has to be followed.

Frequency	Field Strength	Distance	Field Strength Limit at 3m Distance	
(MHz)	uV/m	(m)	uV/m	dBuV/m
0.009 ~ 0.490	2400/F(kHz)	300	10000 * 2400/F(kHz)	$20\log^{(2400/F(kHz))} + 80$
0.490 ~ 1.705	24000/F(kHz)	30	100 * 24000/F(kHz)	$20\log^{(24000/F(kHz))} + 40$
1.705 ~ 30	30	30	100 * 30	$20\log^{(30)} + 40$
30 ~ 88	100	3	100	$20\log^{(100)}$
88 ~ 216	150	3	150	$20\log^{(150)}$
216 ~ 960	200	3	200	$20\log^{(200)}$
Above 960	500	3	500	$20\log^{(500)}$

LIMITS OF RADIATED EMISSION MEASUREMENT (Above 1000MHz)

FREQUENCY (MHz)	Limit (dBuV/m) (at 3M)	
	PEAK	AVERAGE
Above 1000	74	54

Notes:
(1)The limit for radiated test was performed according to FCC PART 15C.
(2)The tighter limit applies at the band edges.
(3) Emission level (dBuV/m)=20log Emission level (uV/m).

FREQUENCY RANGE OF RADIATED MEASUREMENT (For unintentional radiators)

Highest frequency generated or Upper frequency of measurement used in the device or on which the device operates or tunes (MHz)	Range (MHz)
Below 1.705	30
1.705 – 108	1000
108 – 500	2000
500 – 1000	5000
Above 1000	5th harmonic of the highest frequency or 40 GHz, whichever is lower

7.3 Test procedure

Receiver Parameter	Setting
Attenuation	Auto
9kHz~150kHz	RBW 200Hz for QP
150kHz~30MHz	RBW 9kHz for QP
30MHz~1000MHz	RBW 120kHz for QP

Spectrum Parameter	Setting
1-25GHz	RBW 1 MHz /VBW 1 MHz for Peak, RBW 1 MHz / VBW 10Hz for Average

Below 1GHz test procedure as below:

a. The EUT was placed on the top of a rotating table 0.8 meters above the ground at a 3 meter semi-anechoic camber. The table was rotated 360 degrees to determine the position of the highest radiation.

b. The EUT was set 3 meters away from the interference-receiving antenna, which was mounted on the top of a variable-height antenna tower.

c. The antenna height is varied from one meter to four meters above the ground to determine the maximum value of the field strength. Both horizontal and vertical polarizations of the antenna are set to make the measurement.

d. For each suspected emission, the EUT was arranged to its worst case and then the antenna was tuned to heights from 1 meter to 4 meters (for the test frequency of below 30MHz, the antenna was tuned to heights 1 meter) and the rotatable table was turned from 0 degrees to 360 degrees to find the maximum reading.

e. The test-receiver system was set to Peak Detect Function and Specified Bandwidth with Maximum Hold Mode.

f. If the emission level of the EUT in peak mode was 10dB lower than the limit specified, then testing could be stopped and the peak values of the EUT would be reported. Otherwise the emissions that did not have 10dB margin would be re-tested one by one using peak, quasi-peak or average method as specified and then reported in a data sheet.

Above 1GHz test procedure as below:

g. Different between above is the test site, change from Semi- Anechoic Chamber to fully Anechoic Chamber and change form table 0.8 metre to 1.5 metre(Above 18GHz the distance is 1 meter and table is 1.5 metre).

h. Test the EUT in the lowest channel ,the middle channel ,the Highest channel.

Note:

Both horizontal and vertical antenna polarities were tested and performed pretest to three orthogonal axis. The worst case emissions were reported.

Above 1GHz test procedure as below:

a.The EUT was placed on the top of a rotating table 1.5 meters above the ground at a 3 meter camber. The table was rotated 360 degrees to determine the position of the highest radiation.

b.The EUT was set 3 meters away from the interference-receiving antenna, which was mounted on the top of a variable-height antenna tower.

c.The antenna height is varied from one meter to four meters above the ground to determine the maximum value of the field strength. Both horizontal and vertical polarizations of the antenna are set to make the measurement.

d.For each suspected emission, the EUT was arranged to its worst case and then the antenna was tuned to heights from 1 meter to 4 meters and the rota table was turned from 0 degrees to 360 degrees to find the maximum reading.

e.The test-receiver system was set to Peak Detect Function and Specified Bandwidth with Maximum Hold Mode.

f. If the emission level of the EUT in peak mode was 10dB lower than the limit specified, then testing could be stopped and the peak values of the EUT would be reported. Otherwise the emissions that did not have 10dB margin would be re-tested one by one using peak, quasi-peak or average method as specified and then reported in a data sheet.

g.Test the EUT in the lowest channel,the Highest channel.

Note:

Both horizontal and vertical antenna polarities were tested and performed pretest to three orthogonal axis. The worst case emissions were reported.

7.4 EUT operating Conditions

The EUT was configured for testing in a typical fashion (as a customer would normally use it). The EUT has been programmed to continuously transmit during test. This operating condition was tested and used to collect the included data.

7.5 Test Result

Below 30MHz

Temperature:	26℃	Relative Humidtity:	24%
Pressure:	101 kPa	Test Voltage :	DC 12V
Test Mode :	Mode 4	Polarization :	--

Freq.	Reading	Limit	Margin	State
(MHz)	(dBuV/m)	(dBuV/m)	(dB)	P/F
--	--	--	--	PASS
--	--	--	--	PASS

Note:
The amplitude of spurious emissions which are attenuated by more than 20dB below the permissible value has no need to be reported.
Distance extrapolation factor =40 log (specific distance/test distance)(dB);
Limit line = specific limits(dBuv) + distance extrapolation factor.

Between 30MHz – 1GHz

Temperature:	26℃	Relative Humidtity:	54%
Pressure:	101 kPa	Test Voltage :	DC 12V
Test Mode :	Mode 4	Polarization :	Horizontal

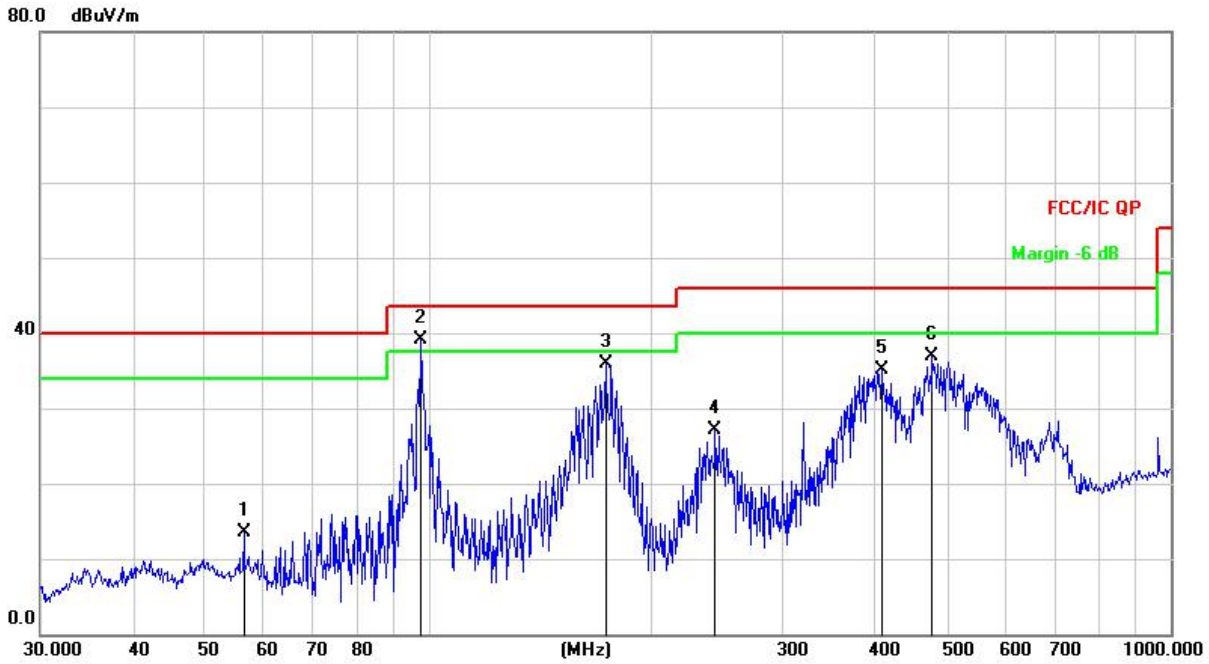

Remark:
Factor = Antenna Factor + Cable Loss – Pre-amplifier.

No.	Mk.	Freq.	Reading Level	Correct Factor	Measure-ment	Limit	Over	
		MHz	dBuV	dB	dBuV/m	dB/m	dB	Detector
1		56.3948	28.99	-15.53	13.46	40.00	-26.54	QP
2	*	97.7983	55.84	-16.68	39.16	43.50	-4.34	QP
3		173.2051	53.86	-18.01	35.85	43.50	-7.65	QP
4		243.3772	42.44	-15.30	27.14	46.00	-18.86	QP
5		407.5145	46.09	-10.92	35.17	46.00	-10.83	QP
6		477.1694	46.26	-9.41	36.85	46.00	-9.15	QP

Temperature:	26℃	Relative Humidtity:	54%
Pressure:	101 kpa	Test Voltage :	DC 12V
Test Mode :	Mode 4	Polarization :	Vertical

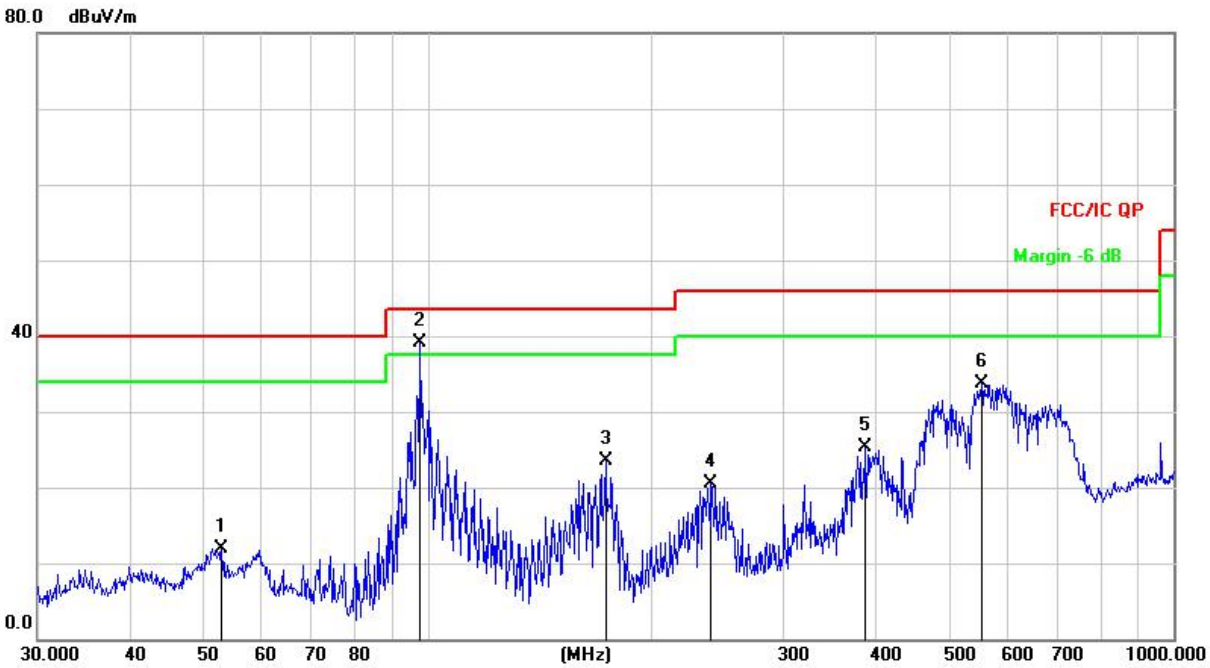

Remark:
Factor = Antenna Factor + Cable Loss – Pre-amplifier.

No.	Mk.	Freq.	Reading Level	Correct Factor	Measure-ment	Limit	Over	
		MHz	dBuV	dB	dBuV/m	dB/m	dB	Detector
1		52.9453	27.08	-15.16	11.92	40.00	-28.08	QP
2	*	97.7983	55.87	-16.68	39.19	43.50	-4.31	QP
3		173.2051	41.44	-18.01	23.43	43.50	-20.07	QP
4		239.9874	35.89	-15.38	20.51	46.00	-25.49	QP
5		386.6338	36.66	-11.39	25.27	46.00	-20.73	QP
6		552.8832	41.29	-7.61	33.68	46.00	-12.32	QP

Between 1GHz – 25GHz

GFSK							
Polar (H/V)	Frequency (MHz)	Reading Level (dBuV/m)	Correct Factor (dB)	Measure-ment (dBuV/m)	Limits (dBuV/m)	Over (dB)	Detector Type
Low channel							
V	4804.00	53.44	-0.43	53.01	74.00	-20.99	PK
V	4804.00	44.25	-0.43	43.82	54.00	-10.18	AV
V	7206.00	45.26	8.31	53.57	74.00	-20.43	PK
V	7206.00	35.95	8.31	44.26	54.00	-9.74	AV
H	4804.00	52.19	-0.43	51.76	74.00	-22.24	PK
H	4804.00	41.92	-0.43	41.49	54.00	-12.51	AV
H	7206.00	42.35	8.31	50.66	74.00	-23.34	PK
H	7206.00	34.82	8.31	43.13	54.00	-10.87	AV
Middle channel							
V	4880.00	51.43	-0.38	51.05	74.00	-22.95	PK
V	4880.00	45.30	-0.38	44.92	54.00	-9.08	AV
V	7320.00	44.35	8.83	53.18	74.00	-20.82	PK
V	7320.00	36.32	8.83	45.15	54.00	-8.85	AV
H	4880.00	48.57	-0.38	48.19	74.00	-25.81	PK
H	4880.00	37.62	-0.38	37.24	54.00	-16.76	AV
H	7320.00	42.93	8.83	51.76	74.00	-22.24	PK
H	7320.00	35.19	8.83	44.02	54.00	-9.98	AV
High channel							
V	4960.00	53.46	-0.32	53.14	74.00	-20.86	PK
V	4960.00	44.44	-0.32	44.12	54.00	-9.88	AV
V	7440.00	45.83	9.35	55.18	74.00	-18.82	PK
V	7440.00	35.91	9.35	45.26	54.00	-8.74	AV
H	4960.00	52.17	-0.32	51.85	74.00	-22.15	PK
H	4960.00	41.64	-0.32	41.32	54.00	-12.68	AV
H	7440.00	43.73	9.35	53.08	74.00	-20.92	PK
H	7440.00	35.18	9.35	44.53	54.00	-9.47	AV

Remark:
1.Emission Level = Meter Reading + Factor,
Factor = Antenna Factor + Cable Loss – Pre-amplifier.
Over= Emission Level - Limit
2.If peak below the average limit, the average emission was no test.
3. In restricted bands of operation, The spurious emissions below the permissible value more than 20dB
4. The amplitude of spurious emissions which are attenuated by more than 20dB below the permissible value has no need to be reported.
5.This report only shows the worst case test data.

8. RADIATED BAND EMISSION MEASUREMENT AND RESTRICTED BANDS OF OPERATION

8.1 Block Diagram Of Test Setup

Radiated Emission Test-Up Frequency Above 1GHz

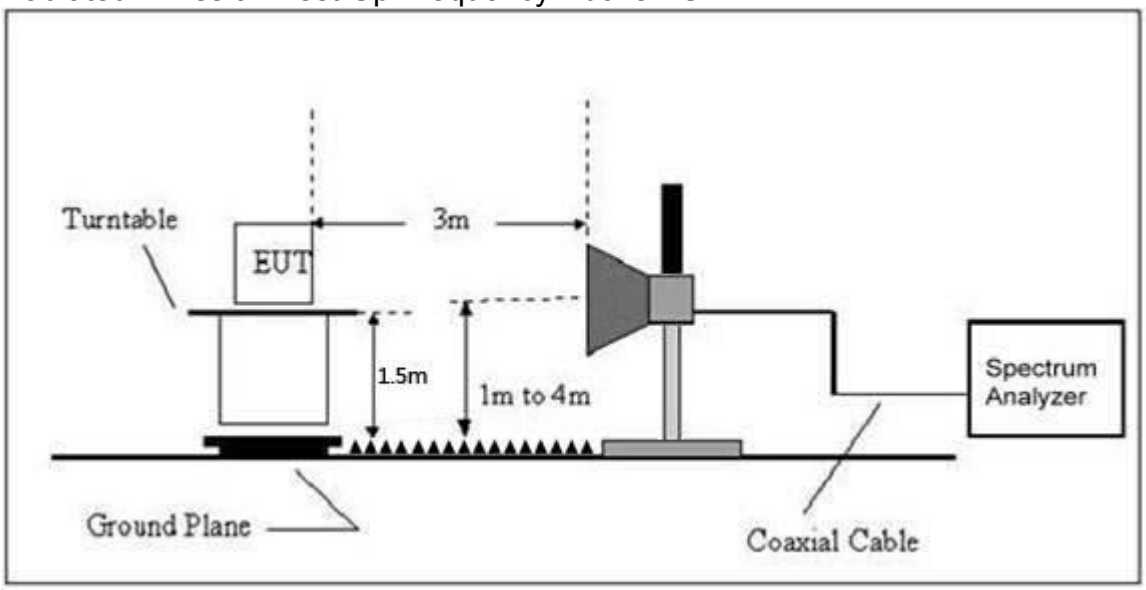

8.2 Limit

FCC Part15 C Section 15.209 and 15.205

(a) Except as shown in paragraph (d) of this section, only spurious emissions are permitted in any of the frequency bands listed below:

MHz	MHz	MHz	GHz
0.090-0.110	16.42-16.423	399.9-410	4.5-5.15
[1]0.495-0.505	16.69475-16.69525	608-614	5.35-5.46
2.1735-2.1905	16.80425-16.80475	960-1240	7.25-7.75
4.125-4.128	25.5-25.67	1300-1427	8.025-8.5
4.17725-4.17775	37.5-38.25	1435-1626.5	9.0-9.2
4.20725-4.20775	73-74.6	1645.5-1646.5	9.3-9.5
6.215-6.218	74.8-75.2	1660-1710	10.6-12.7
6.26775-6.26825	108-121.94	1718.8-1722.2	13.25-13.4
6.31175-6.31225	123-138	2200-2300	14.47-14.5
8.291-8.294	149.9-150.05	2310-2390	15.35-16.2
8.362-8.366	156.52475-156.52525	2483.5-2500	17.7-21.4
8.37625-8.38675	156.7-156.9	2690-2900	22.01-23.12
8.41425-8.41475	162.0125-167.17	3260-3267	23.6-24.0
12.29-12.293	167.72-173.2	3332-3339	31.2-31.8
12.51975-12.52025	240-285	3345.8-3358	36.43-36.5
12.57675-12.57725	322-335.4	3600-4400	([2])
13.36-13.41			

LIMITS OF RADIATED EMISSION MEASUREMENT (Above 1000MHz)

FREQUENCY (MHz)	Limit (dBuV/m) (at 3M)	
	PEAK	AVERAGE
Above 1000	74	54

Notes:
(1)The limit for radiated test was performed according to FCC PART 15C.
(2)The tighter limit applies at the band edges.
(3)Emission level (dBuV/m)=20log Emission level (uV/m).

8.3 Test procedure

Receiver Parameter	Setting
Attenuation	Auto
Start Frequency	2300MHz
Stop Frequency	2520
RB / VB (emission in restricted band)	1 MHz / 1 MHz for Peak, 1 MHz / 10Hz for Average

Above 1GHz test procedure as below:

a.The EUT was placed on the top of a rotating table 1.5 meters above the ground at a 3 meter camber. The table was rotated 360 degrees to determine the position of the highest radiation.

b.The EUT was set 3 meters away from the interference-receiving antenna, which was mounted on the top of a variable-height antenna tower.

c.The antenna height is varied from one meter to four meters above the ground to determine the maximum value of the field strength. Both horizontal and vertical polarizations of the antenna are set to make the measurement.

d.For each suspected emission, the EUT was arranged to its worst case and then the antenna was tuned to heights from 1 meter to 4 meters and the rota table was turned from 0 degrees to 360 degrees to find the maximum reading.

e.The test-receiver system was set to Peak Detect Function and Specified Bandwidth with Maximum Hold Mode.

f. If the emission level of the EUT in peak mode was 10dB lower than the limit specified, then testing could be stopped and the peak values of the EUT would be reported. Otherwise the emissions that did not have 10dB margin would be re-tested one by one using peak, quasi-peak or average method as specified and then reported in a data sheet.

g.Test the EUT in the lowest channel,the Highest channel.

Note:

Both horizontal and vertical antenna polarities were tested and performed pretest to three orthogonal axis. The worst case emissions were reported.

8.4 EUT operating Conditions

The EUT was configured for testing in a typical fashion (as a customer would normally use it). The EUT has been programmed to continuously transmit during test. This operating condition was tested and used to collect the included data.

8.5 Test Result

	Polar (H/V)	Frequency (MHz)	Reading Level (dBuV/m)	Correct Factor (dB)	Measure-ment (dBuV/m)	Limits (dBuV/m)		Result
					PK	PK	AV	
GFSK	Low Channel 2402MHz							
	H	2390.00	57.60	-6.70	50.90	74.00	54.00	PASS
	H	2400.00	50.16	-6.71	43.45	74.00	54.00	PASS
	V	2390.00	57.07	-6.70	50.37	74.00	54.00	PASS
	V	2400.00	48.29	-6.71	41.58	74.00	54.00	PASS
	High Channel 2480MHz							
	H	2483.50	57.13	-6.79	50.34	74.00	54.00	PASS
	H	2485.00	49.09	-6.81	42.28	74.00	54.00	PASS
	V	2483.50	55.91	-6.79	49.12	74.00	54.00	PASS
	V	2485.00	48.76	-6.81	41.95	74.00	54.00	PASS

Remark:
1. Emission Level = Meter Reading + Factor,
Factor = Antenna Factor + Cable Loss – Pre-amplifier.
Over= Emission Level - Limit
2. If the PK measured levels comply with average limit, then the average level were deemed to comply with average limit.
3 In restricted bands of operation, The spurious emissions below the permissible value more than 20dB
4. The amplitude of spurious emissions which are attenuated by more than 20dB below the permissible value has no need to be reported.
5. This report only shows the worst case test data.

9. POWER SPECTRAL DENSITY TEST

9.1 Block Diagram Of Test Setup

9.2 Limit

FCC Part15 (15.247) , Subpart C				
Section	Test Item	Limit	Frequency Range (MHz)	Result
15.247	Power Spectral Density	8 dBm (in any 3KHz)	2400-2483.5	PASS

LIMITS OF RADIATED EMISSION MEASUREMENT (Above 1000MHz)

9.3 Test procedure

1. Set analyzer center frequency to DTS channel center frequency.
2. Set the span to 1.5 times the DTS bandwidth.
3. Set the RBW to: 3 kHz
4. Set the VBW ≥ 3 x RBW.
5. Detector = peak.
6. Sweep time = auto couple.
7. Trace mode = max hold.
8. Allow trace to fully stabilize.
9. Use the peak marker function to determine the maximum amplitude level within the RBW.
10. If measured value exceeds limit, reduce RBW (no less than 3 kHz) and repeat.

.

9.4 EUT operating Conditions

The EUT tested system was configured as the statements of 4.6 Unless otherwise a special operating condition is specified in the follows during the testing.

Note: Power Spectral Density(dBm)=Reading+Cable Loss

9.5 Test Result

Temperature：	26℃	Relative Humidity：	54%
Test Mode ：	GFSK	Test Voltage ：	DC 12V

Frequency	Power Spectral Density(dBm/3kHz)	Limit (dBm/3kHz)	Result
2402 MHz	-22.825	8	PASS
2440 MHz	-20.334	8	PASS
2480 MHz	-20.632	8	PASS

CH01

CH20

Agilent Spectrum Analyzer - Swept SA
Marker 1 2.440014000000 GHz
PNO: Wide
IFGain:Low
Trig: Free Run
Atten: 20 dB
Avg Type: Log-Pwr
Avg|Hold: 96/100
11:08:49 AM Sep 09, 2020
Ref Offset 0.5 dB
10 dB/div
Ref 10.00 dBm
Mkr1 2.440 014 GHz
-20.334 dBm
Center 2.440000 GHz
#Res BW 3.0 kHz
#VBW 10 kHz
Span 2.000 MHz
Sweep 210.9 ms (1001 pts)
Peak Search
Next Peak
Next Pk Right
Next Pk Left
Marker Delta
Mkr→CF
Mkr→Ref Lvl
More
1 of 2

CH40

Agilent Spectrum Analyzer - Swept SA
Marker 1 2.479830000000 GHz
PNO: Wide
IFGain:Low
Trig: Free Run
Atten: 20 dB
Avg Type: Log-Pwr
Avg|Hold: 65/100
11:09:22 AM Sep 09, 2020
Ref Offset 0.5 dB
10 dB/div
Ref 10.00 dBm
Mkr1 2.479 830 GHz
-20.632 dBm
Center 2.480000 GHz
#Res BW 3.0 kHz
#VBW 10 kHz
Span 2.000 MHz
Sweep 210.9 ms (1001 pts)
Peak Search
Next Peak
Next Pk Right
Next Pk Left
Marker Delta
Mkr→CF
Mkr→Ref Lvl
More
1 of 2

10. BANDWIDTH TEST

10.1 Block Diagram Of Test Setup

10.2 Limit

FCC Part15 (15.247) , Subpart C				
Section	Test Item	Limit	Frequency Range (MHz)	Result
15.247(a)(2)	Bandwidth	>= 500KHz (6dB bandwidth)	2400-2483.5	PASS

10.3 Test procedure

1. Set RBW = 100 kHz.
2. Set the video bandwidth (VBW) ≥ 3 x RBW.
3. Detector = Peak.
4. Trace mode = max hold.
5. Sweep = auto couple.
6. Allow the trace to stabilize.
7. Measure the maximum width of the emission that is constrained by the frequencies associated with the two outermost amplitude points (upper and lower frequencies) that are attenuated by 6 dB relative to the maximum level measured in the fundamental emission.

10.4 EUT operating Conditions

The EUT tested system was configured as the statements of 4.6 Unless otherwise a special operating condition is specified in the follows during the testing.

Note: Power Spectral Density(dBm)=Reading+Cable Loss

10.5 Test Result

Temperature：	26℃	Relative Humidity：	54%
Test Mode ：	GFSK	Test Voltage ：	DC 12V

Frequency (MHz)	6dB bandwidth (MHz)	Limit (kHz)	Result
2402	0.727	500	Pass
2440	0.772	500	Pass
2480	0.766	500	Pass

CH 01

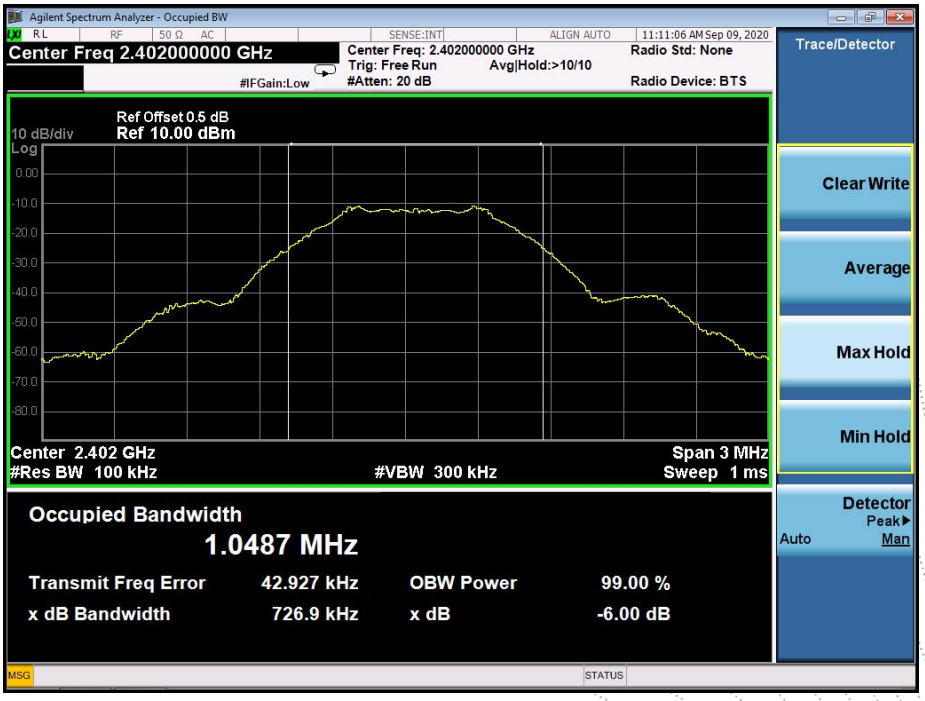

CH20

Agilent Spectrum Analyzer - Occupied BW
Center Freq 2.440000000 GHz
Center Freq: 2.440000000 GHz
Trig: Free Run
Avg|Hold:>10/10
#Atten: 20 dB
Radio Std: None
Radio Device: BTS
11:11:32 AM Sep 09, 2020
Trace/Detector
Ref Offset 0.5 dB
10 dB/div
Ref 10.00 dBm
Clear Write
Average
Max Hold
Min Hold
Center 2.44 GHz
#Res BW 100 kHz
#VBW 300 kHz
Span 3 MHz
Sweep 1 ms
Occupied Bandwidth
1.0698 MHz
Transmit Freq Error 39.796 kHz
OBW Power 99.00 %
x dB Bandwidth 771.6 kHz
x dB -6.00 dB
Detector
Peak
Auto
Man

CH40

Agilent Spectrum Analyzer - Occupied BW
Center Freq 2.480000000 GHz
Center Freq: 2.480000000 GHz
Trig: Free Run
Avg|Hold:>10/10
#Atten: 20 dB
Radio Std: None
Radio Device: BTS
11:11:49 AM Sep 09, 2020
Trace/Detector
Ref Offset 0.5 dB
10 dB/div
Ref 10.00 dBm
Clear Write
Average
Max Hold
Min Hold
Center 2.48 GHz
#Res BW 100 kHz
#VBW 300 kHz
Span 3 MHz
Sweep 1 ms
Occupied Bandwidth
1.0841 MHz
Transmit Freq Error 43.510 kHz
OBW Power 99.00 %
x dB Bandwidth 765.6 kHz
x dB -6.00 dB
Detector
Peak
Auto
Man

11. PEAK OUTPUT POWER TEST

11.1 Block Diagram Of Test Setup

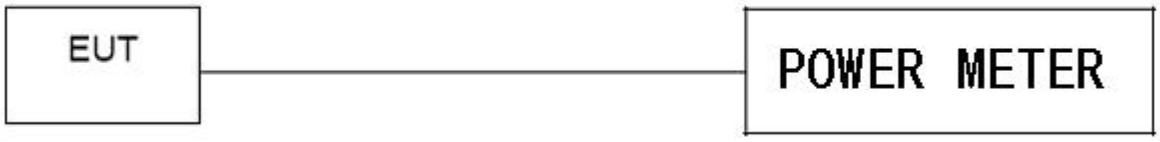

11.2 Limit

FCC Part15 (15.247) , Subpart C				
Section	Test Item	Limit	Frequency Range (MHz)	Result
15.247(b)(3)	Peak Output Power	1 watt or 30dBm	2400-2483.5	PASS

11.3 Test procedure

a. The EUT was directly connected to the Power meter

11.4 EUT operating Conditions

The EUT tested system was configured as the statements of 4.6 Unless otherwise a special operating condition is specified in the follows during the testing.

Note: Power Spectral Density(dBm)=Reading+Cable Loss

11.5 Test Result

Temperature：	26℃	Relative Humidity：	54%
Test Mode ：	GFSK	Test Voltage ：	DC 12V

L	Frequency	Maximum Conducted Output Power(PK)	Conducted Output Power Limit
	(MHz)	(dBm)	dBm
GFSK	2402	-9.507	30
	2440	-8.792	30
	2480	-7.600	30

12. 100 KHZ BANDWIDTH OF FREQUENCY BAND EDGE

12.1 Block Diagram Of Test Setup

12.2 Limit

In any 100 kHz bandwidth outside the frequency band in which the spread spectrum intentional radiator is operating, the radio frequency power that is produced by the intentional radiator shall be at least 20 dB below that in the 100 kHz bandwidth within the band that contains the highest level of the desired power, based on either an RF conducted or a radiated measurement.

12.3 Test procedure

Using the following spectrum analyzer setting:

a) Set the RBW = 100KHz.

b) Set the VBW = 300KHz.

c) Sweep time = auto couple.

d) Detector function = peak.

e) Trace mode = max hold.

f) Allow trace to fully stabilize..

12.4 EUT operating Conditions

The EUT tested system was configured as the statements of 4.6 Unless otherwise a special operating condition is specified in the follows during the testing.

Note: Power Spectral Density(dBm)=Reading+Cable Loss

12.5 Test Result

Temperature：	26℃	Relative Humidity：	54%
Test Mode ：	GFSK	Test Voltage ：	DC 12V

GFSK: Band Edge, Left Side

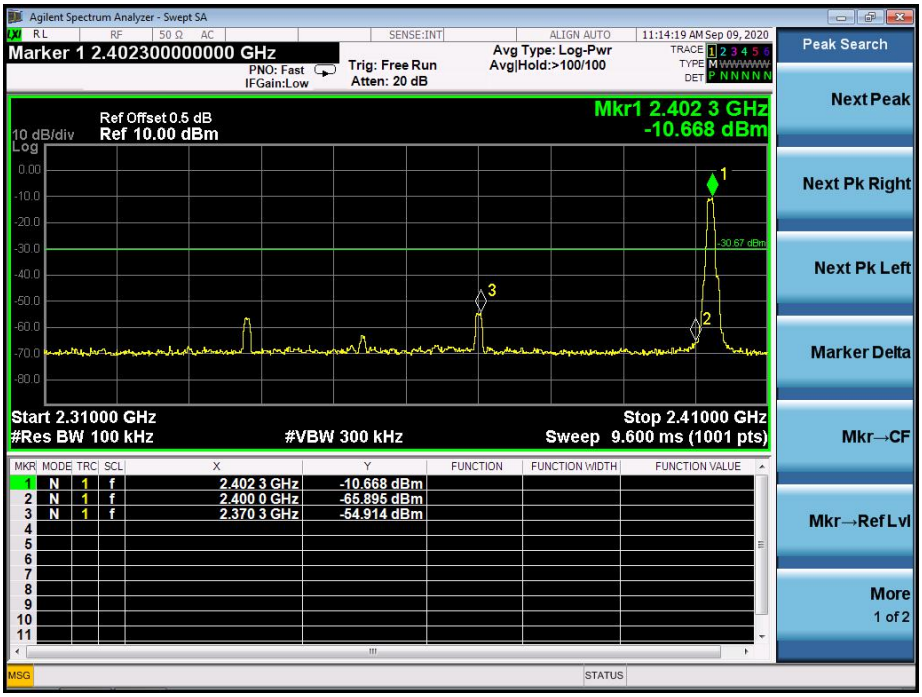

GFSK: Band Edge, Right Side

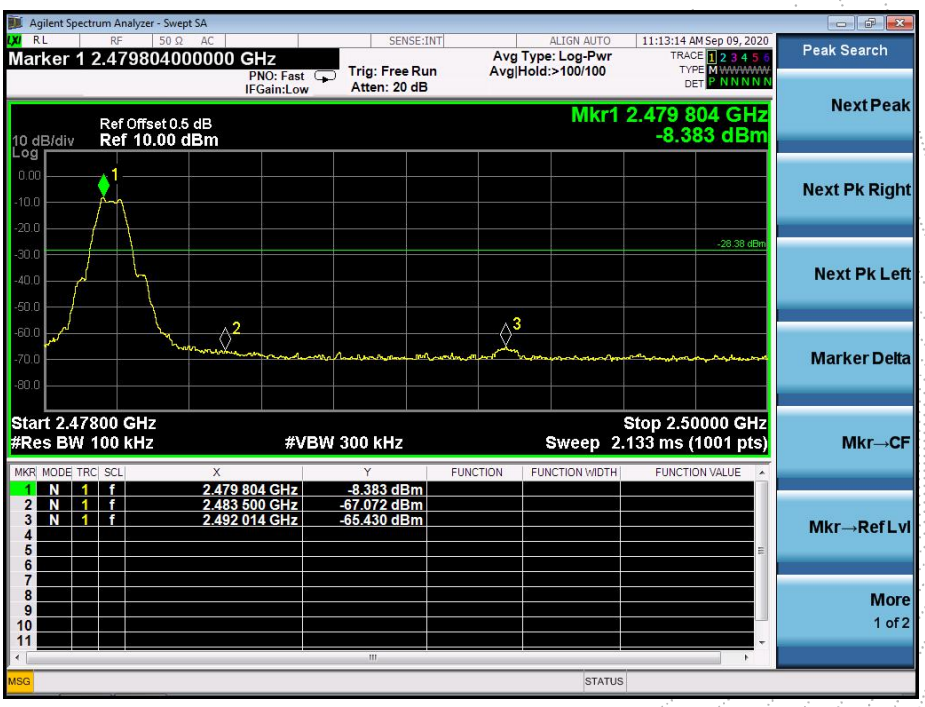

CONDUCTED EMISSION MEASUREMENT

GFSK

Low Channel 2402MHz

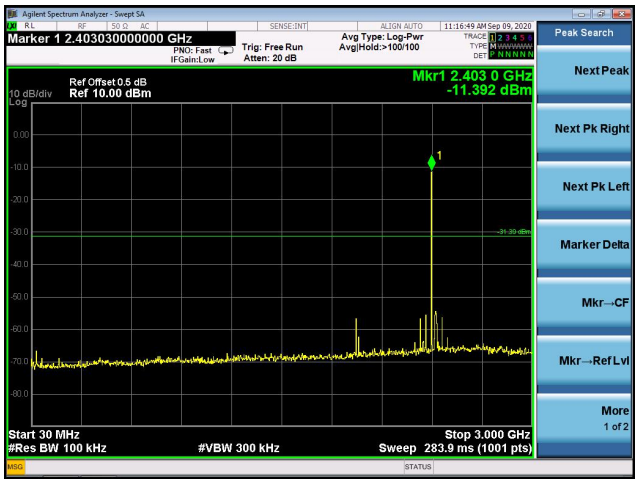

Middle Channel 2440MHz

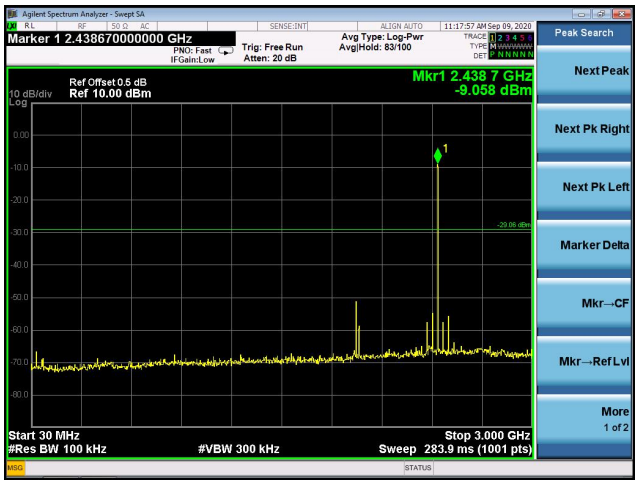

High Channel 2480MHz

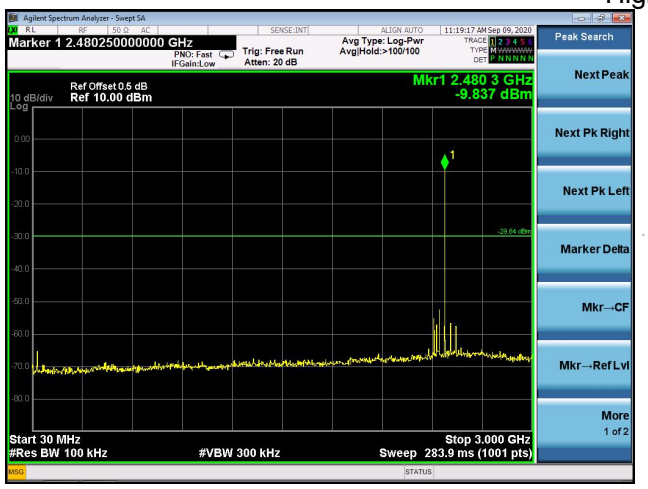

13. ANTENNA REQUIREMENT

13.1 Limit

15.203 requirement: For intentional device, according to 15.203: an intentional radiator shall be designed to ensure that no antenna other than that furnished by the responsible party shall be used with the device.

13.2 Test Result

The EUT antenna is PCB antenna, fulfill the requirement of this section.

14. EUT PHOTOGRAPHS

EUT Photo 1

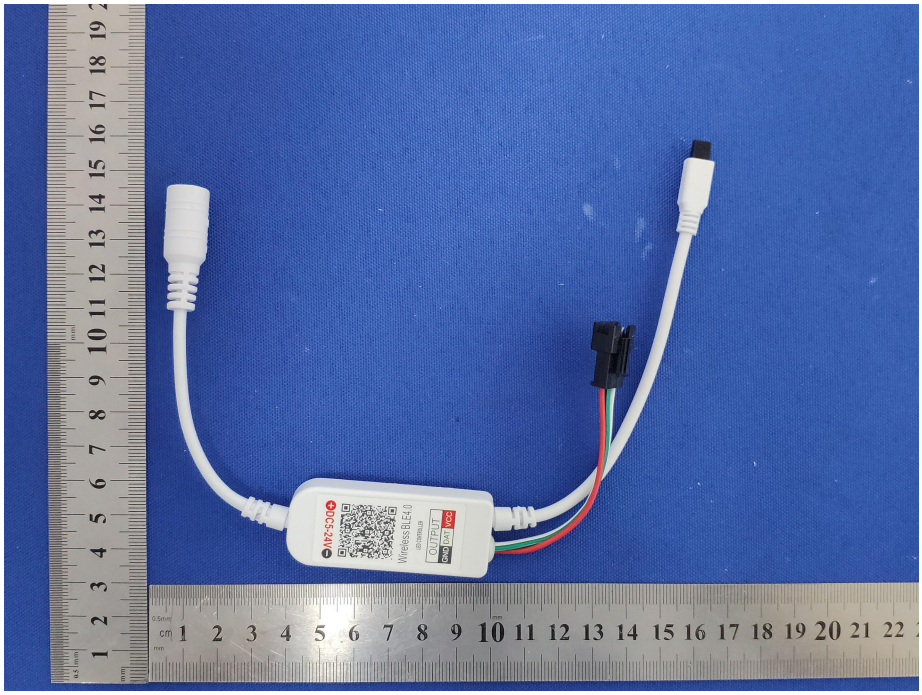

EUT Photo 2

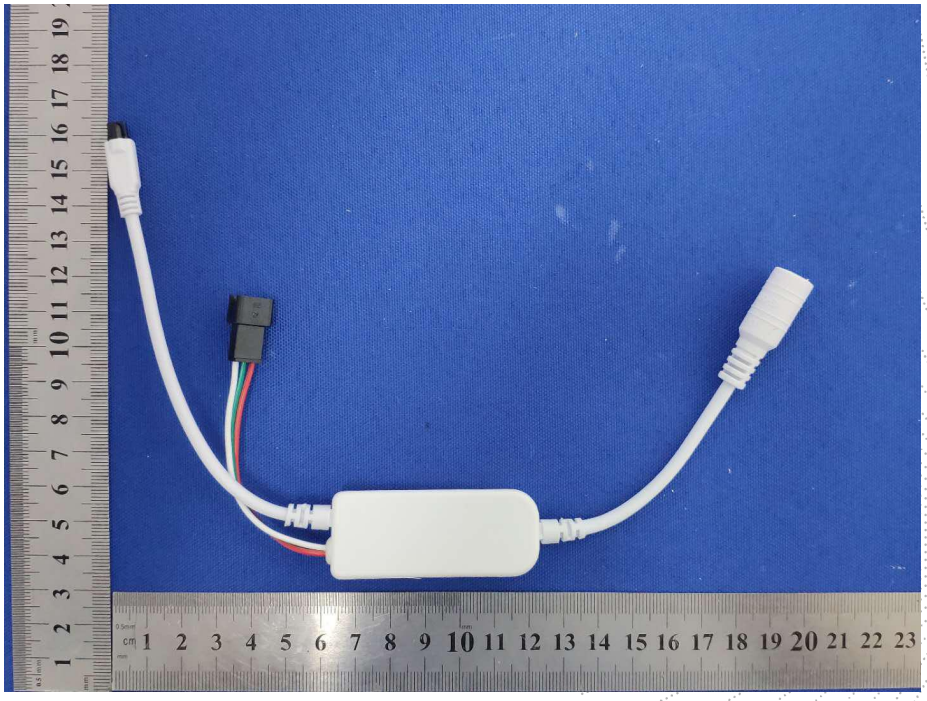

15. EUT TEST SETUP PHOTOGRAPHS

Radiated Measurement Photos

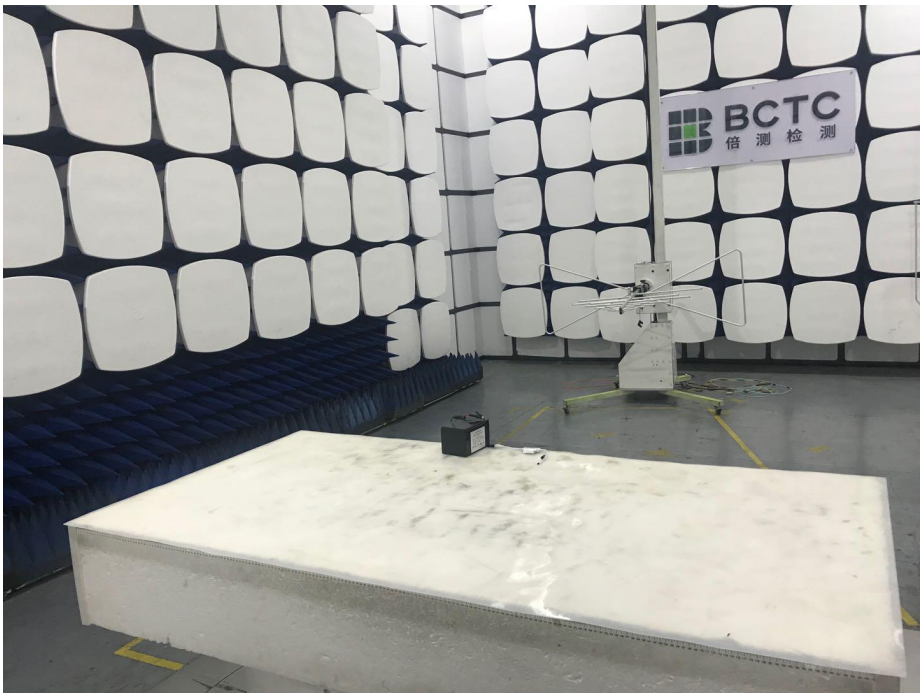

STATEMENT

1.The equipment lists are traceable to the national reference standards.

2.The test report can not be partially copied unless prior written approval is issued from our lab.

3.The test report is invalid without stamp of laboratory.

4.The test report is invalid without signature of person(s) testing and authorizing.

5.The test process and test result is only related to the Unit Under Test.

6.The quality system of our laboratory is in accordance with ISO/IEC17025.

7.If there is any objection to report, the client should inform issuing laboratory within 15 days from the date of receiving test report.

Address:
1-2F, East of B Building, Pengzhou Industrial Park, Fuyuan 1st Road, Qiaotou, Fuyong Street, Bao'an District,Shenzhen,Guangdong,China

TEL：400-788-9558

P.C.: 518103

FAX：0755-33229357

Website：http://www.bctc-lab.com

E-Mail：bctc@bctc-lab.com.cn

※※※※※ **END** ※※※※※