RF Test Report

Report No: FCS202406081W01

Issued for

Applicant:	Kunshan MYZY Fixture Technology Co., Ltd.
Address:	No.2618,Huanqing Road,Kunshan City, Jiangsu Province,China
Product Name:	HDO 2.0 Fixture
Brand Name:	N/A
Model Name:	MZ22-FT007-01
Series Model:	N/A
FCC ID:	2AXI7-FT007
Issued By: Flux Compliance Service Laboratory Add: Room 105 Floor Bao hao Technology Building 1 NO.15 Gong ye West Road Hi-Tech Industrial, Song shan lake Dongguan Tel: 769-27280901 Fax:769-27280901 http://www.FCS-lab.com	

TEST RESULT CERTIFICATION

Applicant's Name..... : Kunshan MYZY Fixture Technology Co., Ltd.

Address ..... : No.2618,Huanqing Road,Kunshan City, Jiangsu Province,China

Manufacture's Name..... : Kunshan MYZY Fixture Technology Co., Ltd.

Address ..... : No.2618,Huanqing Road,Kunshan City, Jiangsu Province,China

Product Description

Product Name..... : HDO 2.0 Fixture

Brand Name ..... : N/A

Model Name..... : MZ22-FT007-01

Series Model..... : N/A

Test Standards..... : FCC Rules and Regulations Part 15 Subpart C, Section 225

Test Procedure..... : ANSI C63.10:2013

This device described above has been tested FCS, the test results show that the equipment under test (EUT) is in compliance with the FCC requirements. And it is applicable only to the tested sample identified in the report.
This report shall not be reproduced except in full, without the written approval of FCS, this document may be altered or revised by FCS, personal only, and shall be noted in the revision of the document..

Date of Test.....:

Date (s) of performance of tests.: Jun 19, 2024~Jun 26, 2024

Date of Issue .....: Jun 26, 2024

Test Result .....: Pass

Tested by : Scott Shen

(Scott Shen)

Reviewed by : Duke Qian

(Duke Qian)

Approved by : Jack Wang

(Jack Wang)

目录

Revision History 4
1. SUMMARY OF TEST RESULTS 5
2. GENERAL INFORMATION 7
3.RADIATED EMISSION MEASUREMENT 11
3.1 LIMIT 11
3.2 TEST PROCEDURE 12
3.3 TEST SETUP 13
3.4 TEST RESULTS 14
4.20 DB BANDWIDTH TEST 18
4.1 TEST PROCEDURE 18
4.2 TEST SETUP 18
4.3 TEST RESULTS 19
5. CONDUCTED EMISSION MEASUREMENT 20
5.1 Power Line Conducted Emission Limits 20
5.2 Test Procedure 20
5.3 Test Setup 21
5.4 Test Result 22
6 FREQUENCY STABILITY MEASUREMEN 24
6.1 LIMIT 24
6.2 TEST PROCEDURE 24
6.3TEST RESULTS 25
7 ANTENNA REQUIREMENT 26
7.1 STANDARD REQUIREMENT 26
7.2 EUT ANTENNA 26

Revision History

Rev.	Issue Date	Effect Page	Contents
00	Jun 26, 2024	All	Initial Issue

1. SUMMARY OF TEST RESULTS

Test Summary			
FCC part No.	Test Item	Judgment	Remark
15.207	Conducted Emission	PASS	--
15.225(d) &15.209	Radiated Emission	PASS	--
15.225(a)	Field Strength of Fundamental Emissions	PASS	
2.1049	20dB Bandwidth	PASS	
15.225(e)	Frequency Stability	PASS	
15.203	Antenna Requirement	PASS	--

NOTE:

(1) " N/A" denotes test is not applicable in this Test Report

(2) All tests are according to ANSI C63.10-2013

1.1 TEST FACTORY

Company Name:	Flux Compliance Service Laboratory
Address:	Room 105 Floor Bao hao Technology Building 1 NO.15 Gong ye West Road Hi-Tech Industrial, Song shan lake Dongguan
Telephone:	+86-769-27280901
Fax:	+86-769-27280901
FCC Test Firm Registration Number: 514908 Designation number: CN0127 A2LA accreditation number：5545.01	

1.2 MEASUREMENT UNCERTAINTY

The reported uncertainty of measurement **y ±U**, where expended uncertainty **U** is based on a standard uncertainty multiplied by a coverage factor of **k=2**, providing a level of confidence of approximately **95** %.

No.	Item	Uncertainty
1	RF output power, conducted	±0.71dB
2	Unwanted Emissions, conducted	±2.98 dB
3	Conducted Emission (9KHz-150KHz)	±4.13 dB
4	Conducted Emission (150KHz-30MHz)	±4.74 dB
5	All emissions,radiated(<1G) 30MHz-1000MHz	±3.2 dB
6	All emissions,radiated (1GHz -18GHz)	±3.66 dB
7	All emissions,radiated (18GHz -40GHz)	±4.31 dB

2. GENERAL INFORMATION

2.1 GENERAL DESCRIPTION OF THE EUT

Product Name	HDO 2.0 Fixture
Trade Name	N/A
Model Name	MZ22-FT007-01
Series Model	N/A
Model Difference	N/A
Frequency	13.56MHZ
Modulation	ASK
Antenna type	PCB antenna
Power Supply	Input:100-240V~50/60Hz
Hardware version number	V1.1
Software version number	V1.1
Connecting I/O Port(s)	Please refer to the User's Manual

Note:

1. For a more detailed features description, please refer to the manufacturer's specifications or the User's Manual.
2. Table for Filed Antenna

Ant.	Brand	Model Name	Antenna Type	Connector	Gain (dBi)	NOTE
1	N/A	N/A	PCB Antenna	N/A	-0.58	Antenna

2.2 DESCRIPTION OF THE TEST MODES

To investigate the maximum EMI emission characteristics generates from EUT, the test system was pre-scanning tested base on the consideration of following EUT operation mode or test configuration mode which possible have effect on EMI emission level. Each of these EUT operation mode(s) or test configuration mode(s) mentioned above was evaluated respectively.

Configuration and peripherals

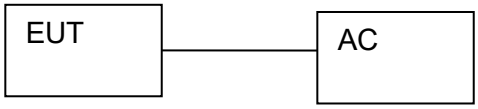

Test environment conditions
During the measurement the environmental conditions were within the listed ranges:
Temperature range: 21-25℃
Humidity range: 40-75%
Pressure range: 86-106kPa

2.3 DESCRIPTION OF NECESSARY ACCESSORIES AND SUPPORT UNITS

The EUT has been tested as an independent unit together with other necessary accessories or support units. The following support units or accessories were used to form a representative test configuration during the tests.

Necessary accessories

Item	Equipment	Mfr/Brand	Model/Type No.	Serial No.	Note
E-2	Notebook	Lenovo	5896	N/A	N/A
C-1	DC Cable	N/A	N/A	N/A	N/A

Support units

Item	Equipment	Mfr/Brand	Model/Type No.	Serial No.	Note

Note:

(1) The support equipment was authorized by Declaration of Confirmation.

(2) For detachable type I/O cable should be specified the length in cm in『Length』column.

(3) “YES” is means “shielded” “with core”; “NO” is means “unshielded” “without core”.

2.4 EQUIPMENTS LIST

Radiation Test equipment

Kind of Equipment	Manufacturer	Type No.	Company No.	Last calibration	Calibrated until
EMI Test Receiver	R&S	ESRP 3	FCS-E001	2023.08.29	2024.08.28
Signal Analyzer	R&S	FSV40-N	FCS-E012	2023.08.29	2024.08.28
Active loop Antenna	ZHINAN	ZN30900C	FCS-E013	2023.08.29	2024.08.28
Bilog Antenna	SCHWARZBECK	VULB 9168	FCS-E002	2023.08.29	2024.08.28
Horn Antenna	SCHWARZBECK	BBHA 9120D	FCS-E003	2023.08.29	2024.08.28
SHF-EHF Horn Antenna (18G-40GHz)	A-INFO	LB-180400-KF	FCS-E018	2023.08.29	2024.08.28
Pre-Amplifier(0.1M-3G Hz)	EMCI	EM330N	FCS-E004	2023.08.29	2024.08.28
Pre-Amplifier (1G-18GHz)	N/A	TSAMP-0518SE	FCS-E014	2023.08.29	2024.08.28
Pre-Amplifier (18G-40GHz)	TERA-MW	TRLA-0400	FCS-E019	2023.08.29	2024.08.28
Temperature & Humidity	HTC-1	victor	FCS-E005	2023.08.29	2024.08.28

Conduction Test equipment

Kind of Equipment	Manufacturer	Type No.	Company No.	Last calibration	Calibrated until
EMI Test Receiver	R&S	ESPI	FCS-E020	2023.08.29	2024.08.28
LISN	R&S	ENV216	FCS-E007	2023.08.29	2024.08.28
LISN	ETS	3810/2NM	FCS-E009	2023.08.29	2024.08.28
Temperature & Humidity	HTC-1	victor	FCS-E008	2023.08.29	2024.08.28

RF Connected Test

Kind of Equipment	Manufacturer	Type No.	Company No.	Last calibration	Calibrated until
Spectrum Analyzer	Keysight	N9020A	FCS-E015	2023.08.29	2024.08.28
Spectrum Analyzer	Agilent	E4447A	MY50180039	2023.08.29	2024.08.28
Spectrum Analyzer	R&S	FSV-40	101499	2023.08.29	2024.08.28

3.RADIATED EMISSION MEASUREMENT

3.1 LIMIT

FCC §15.225(A), (B), (C), (D)

LIMITS OF RADIATED EMISSION MEASUREMENT

Frequencies (MHz)	Field Strength (micorvolts/meter)	Measurement Distance (meters)
0.009~0.490	2400/F(KHz)	300
0.490~1.705	24000/F(KHz)	30
1.705~30.0	30	30
30~88	100	3
88~216	150	3
216~960	200	3
Above 960	500	3

For Above 1000 MHz, the emission limit in this paragraph is based on measurement instrumentation employing an average detector, measurement using instrumentation with a peak detector function, corresponding to 20 dB above the maximum permitted average limit.

4. For above 1000 MHz, limit field strength of harmonics: 54dBuV/m@3m (AV) and 74dBuV/m@3m (PK).

LIMITS OF FIELD STRENGTH OF THE FUNDAMENTAL SIGNAL

Frequency range (MHz)	Field Strength@30m		Field Strength@3m
	μV/m	dBμV/m	dBμV/m
Below 13.110	30	29.5	69.5
13.110 ~ 13.410	106	40.5	80.5
13.410 ~ 13.553	334	50.5	90.5
13.553 ~13.567	15.848	84	124
13.567 ~ 13.710	334	50.5	90.5
13.710 ~14.010	106	40.5	80.5
Above 14.010	30	29.5	69.5

NOTE:

1. Field Strength (dBμV/m) = 20*log[Field Strength (μV/m)].
2. In the emission tables above, the tighter limit applies at the band edges.

According to FCC section 15.225, for <30 MHz, Radiated emissions were measured according to ANSI C63.4. The EUT was set to transmit at the highest output power. The EUT was set 10 meter away from the measuring antenna. The loop antenna was positioned 1 meter above the ground from the center of the loop. The measuring bandwidth was set to 10 KHz. (Note: During testing the receive antenna was rotated about its axis to maximize the emission from the EUT) There was no detected Restricted bands and Radiated suprious emission below 30MHz. The 30m limit was converted to 3m Limit using square factor(x) as it was found by measurements as follows; 3 m Limit(dBuV/m) =20log(X)+40log(30/3)= 20log(15848)+40log(30/3) = 124dBuV

3.2 TEST PROCEDURE

a. The measuring distance of at 3 m shall be used for measurements at frequency 0.009MHz up to 1GHz,and above 1GHz.
b. The EUT was placed on the top of a rotating table 0.8 meters (above 1GHz is 1.5 m) above the ground at a 3 meter anechoic chamber test site. The table was rotated 360 degrees to determine the position of the highest radiation.
c. The height of the equipment shall be 0.8 m(above 1GHz is 1.5 m); the height of the test antenna shall vary between 1 m to 4 m. horizontal and vertical polarizations of the antenna are set to make the measurement.
d. The initial step in collecting conducted emission data is a spectrum analyzer peak detector mode pre-scanning the measurement frequency range. Significant peaks are then marked and then QuasiPeak detector mode re-measured.
e. If the Peak Mode measured value compliance with and lower than Quasi Peak Mode Limit, the EUT shall be deemed to meet QP Limits and then no additional QP Mode measurement performed.
f. For the actual test configuration, please refer to the related Item –EUT Test Photos.

Note:
Both horizontal and vertical antenna polarities were tested and performed pretest to three orthogonal axis. The worst case emissions were reported

3.3 TEST SETUP

（A） Radiated Emission Test-Up Frequency Below 30MHz

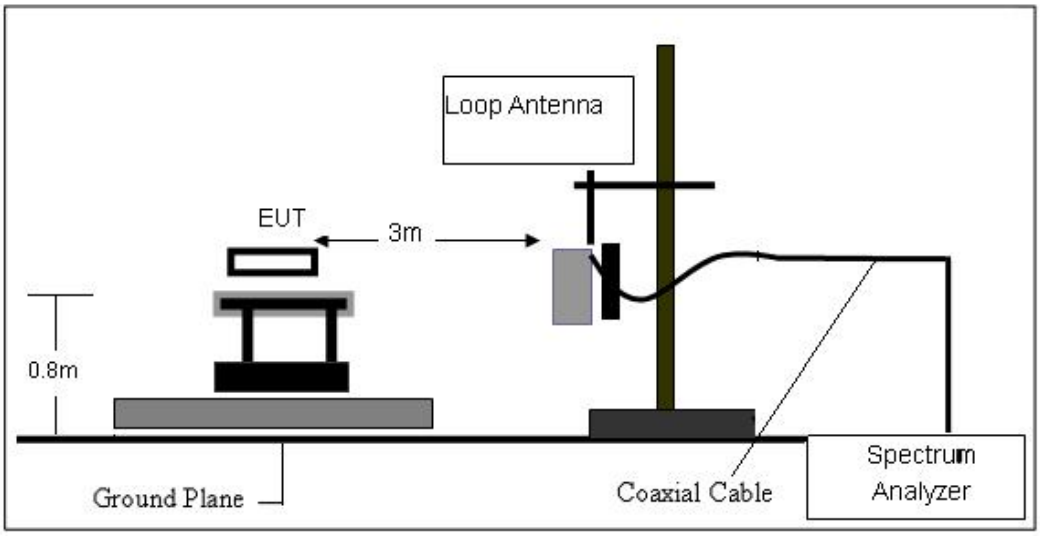

（B） Radiated Emission Test-Up Frequency 30MHz~1GHz

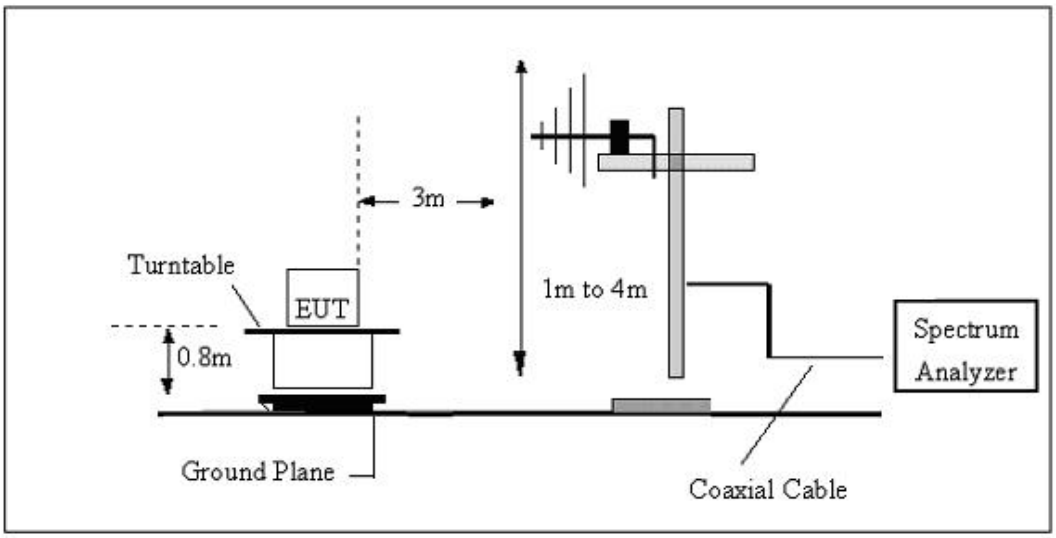

（C） Radiated Emission Test-Up Frequency Above 1GHz

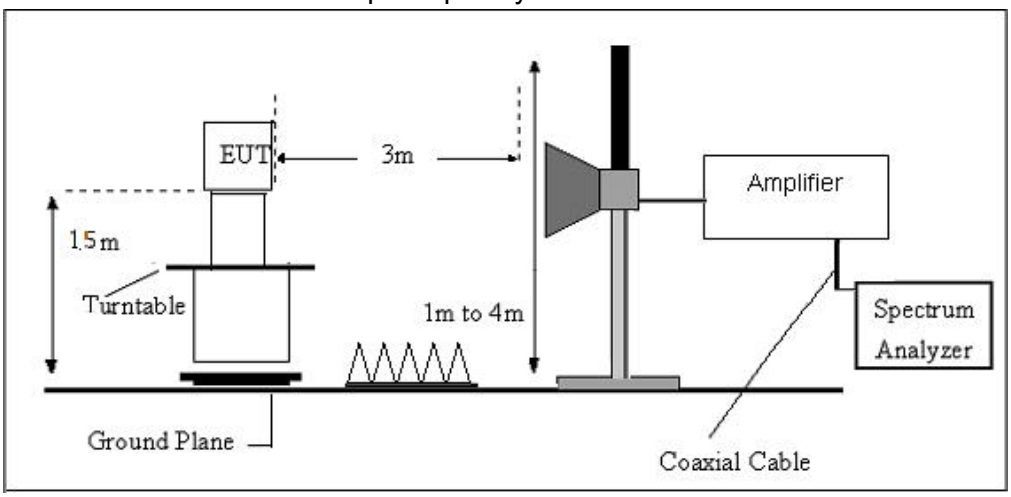

3.4 TEST RESULTS

Temperature:	25℃	Relative Humidity:	60%
Test Mode:	ASK	Test Voltage:	AC 120V/60Hz

For field strength of the fundamental signal

X axis

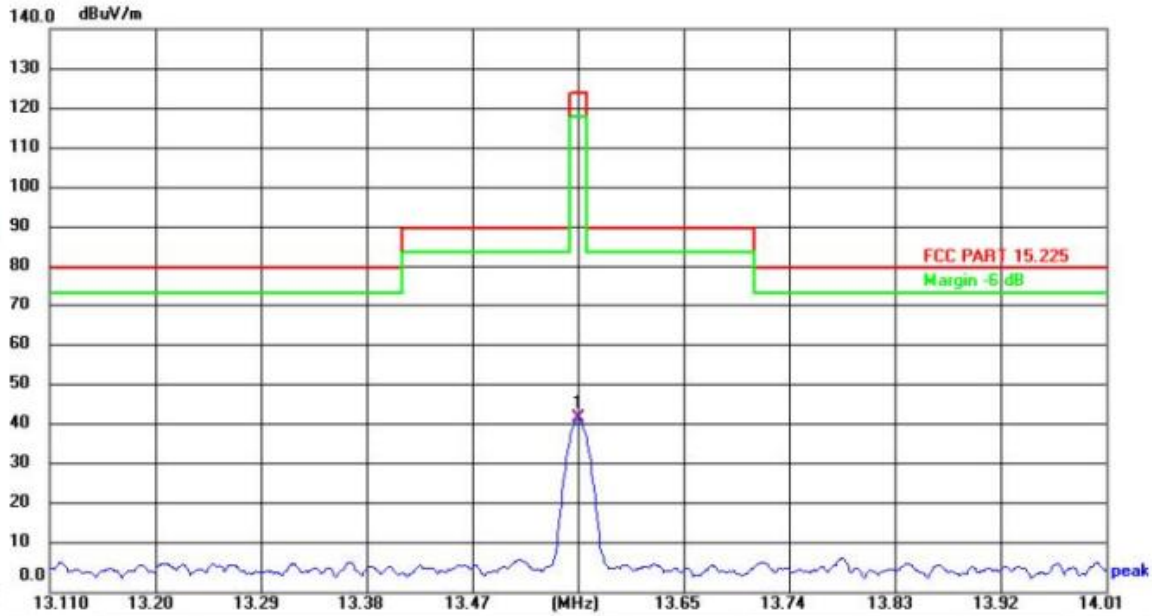

No.	Frequency (MHz)	Reading (dBuV)	Factor (dB/m)	Level (dBuV/m)	Limit (dBuV/m)	Margin (dB)	Detector
1	13.5600	53.09	-10.01	43.08	124.00	-80.92	QP

**Note: Factor= Antenna Factor + Cable Loss*
Measured（dBμV/m）= Reading + Factor, Margin= Measured - Limit
Emission level (dBμV/m) = 20 log Emission level (μV/m).
Measured distance is 3m.
All emissions emit from non-NFC function of digital unintentional emissions. All NFC's spurious emissions are below 20dB of limits.
X axis / Y axis/ Z axis were tested,report only recorded the worst result of X axis.

For spurious emission

9 KHz~30MHz

Note: Only recorded the worst test result.

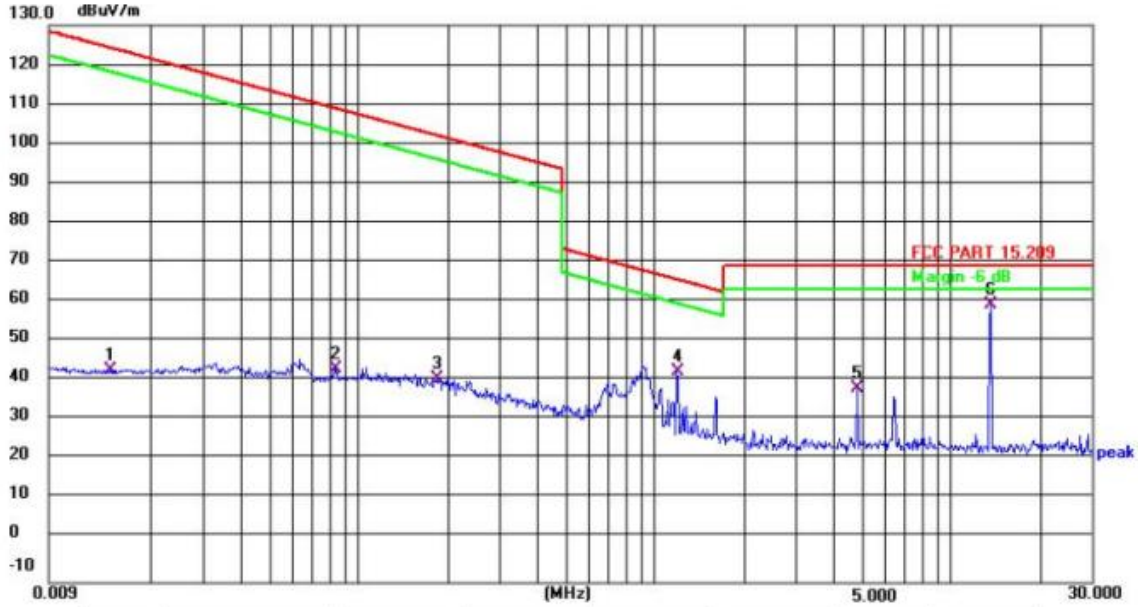

No.	Frequency (MHz)	Reading (dBuV)	Factor (dB/m)	Level (dBuV/m)	Limit (dBuV/m)	Margin (dB)	Detector
1	0.0145	52.61	-9.22	43.39	124.21	-80.82	QP
2	0.0834	53.52	-9.68	43.84	109.09	-65.25	QP
3	0.1839	50.98	-9.77	41.21	102.26	-61.05	QP
4	1.1883	52.26	-9.28	42.98	66.11	-23.13	QP
5	4.8357	48.23	-9.40	38.83	69.54	-30.71	QP
6	13.6584	69.95	-10.02	59.93	69.54	-9.61	QP

*Note: Measurement = Reading Level + Factor
Margin = Measurement - Limit.

(30MHZ-1000MHZ)

Temperature:	23.7℃	Relative Humidity:	61%
Test Voltage:	AC 120V/60Hz	Phase:	Horizontal
Test Mode:	ASK		

No.	Frequency	Reading	Correct	Result	Limit	Margin	Remark
	(MHz)	(dBuV)	Factor(dB/m)	(dBuV/m)	(dBuV/m)	(dB)	
1	52.0251	40.81	-18.54	22.27	40.00	-17.73	QP
2	82.6482	51.98	-32.17	19.81	40.00	-20.19	QP
3	140.3421	60.08	-32.14	27.94	43.50	-15.56	QP
4	223.7334	67.17	-32.01	35.16	46.00	-10.84	QP
5	393.4723	59.97	-31.62	28.35	46.00	-17.65	QP
6	1000.0000	60.08	-30.60	29.48	54.00	-24.52	QP

Remark:
1. Margin = Result (Result =Reading + Factor)–Limit

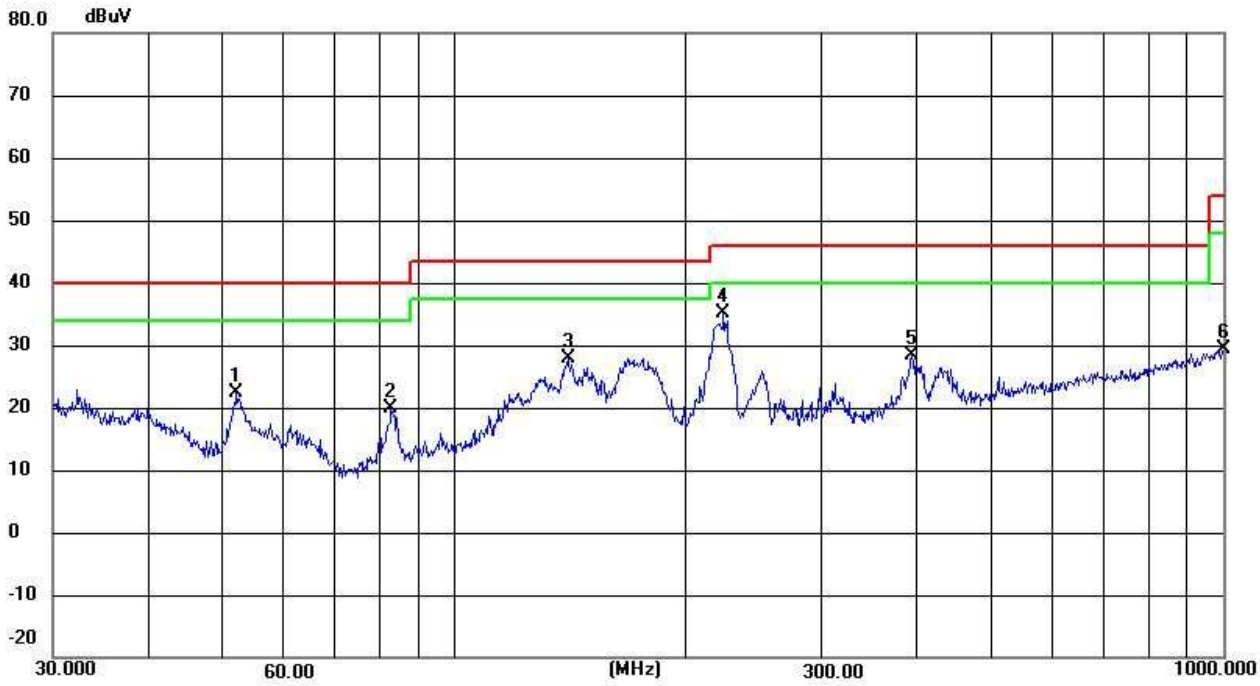

Temperature:	22.7℃	Relative Humidity:	61%
Test Voltage:	AC 120V/60Hz	Phase:	Vertical
Test Mode:	ASK		

No.	Frequency	Reading	Correct	Result	Limit	Margin	Remark
	(MHz)	(dBuV)	Factor(dB/m)	(dBuV/m)	(dBuV/m)	(dB)	
1	39.8542	44.97	-13.64	31.33	40.00	-8.67	QP
2	52.3912	47.19	-18.68	28.51	40.00	-11.49	QP
3	129.0146	58.38	-32.16	26.22	43.50	-17.28	QP
4	219.8449	69.50	-32.02	37.48	46.00	-8.52	QP
5	429.5228	67.19	-31.51	35.68	46.00	-10.32	QP
6	1000.0000	60.43	-30.60	29.83	54.00	-24.17	QP

Remark:
1. Margin = Result (Result =Reading + Factor)–Limit

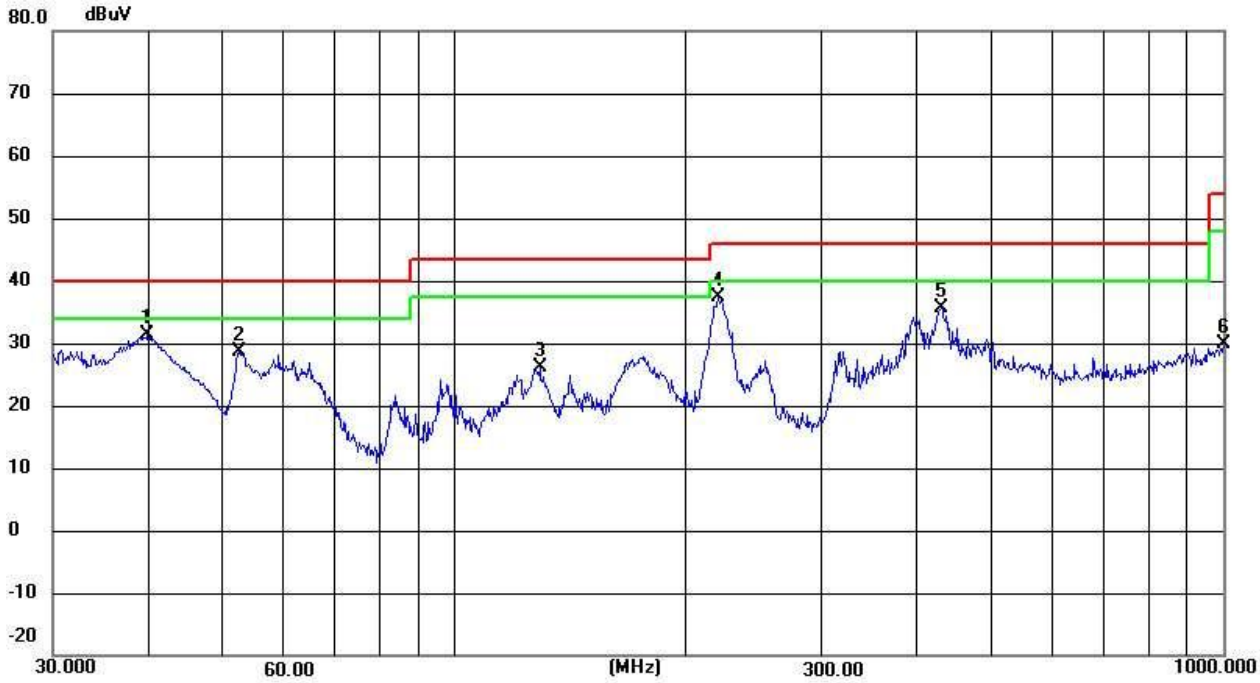

4.20 DB BANDWIDTH TEST

4.1 TEST PROCEDURE

FCC §2.1049&15.215(C)

Emissions from the intentional radiator shall be confined within a band 200 kHz wide centered on the operating frequency.

The 20dB bandwidth is measured with a spectrum analyzer connected via a receiver antenna placed near the EUT

while the EUT is operating in transmission mode.

Use the following spectrum analyzer settings:

Span = approximately 2 to 3 times the 20 dB bandwidth

RBW ≥ 1% of the 20 dB bandwidth

VBW ≥ RBW

Sweep = auto

Detector function = peak

Trace = max hold

4.2 TEST SETUP

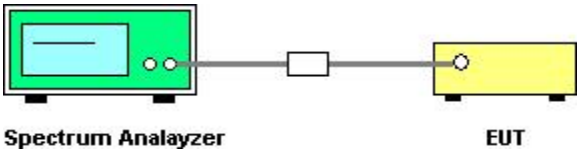

4.3 TEST RESULTS

Temperature:	25℃	Relative Humidity:	50%
Test Mode:	ASK	Test Voltage:	AC 120V/60Hz

Frequency	20dB Bandwidth (MHz)	FL(MHz)	FH(MHz)	Limit(MHz)	Result
13.56 MHz	0.437	13.340	13.777	13.110-14.010	PASS

20dB Bandwidth

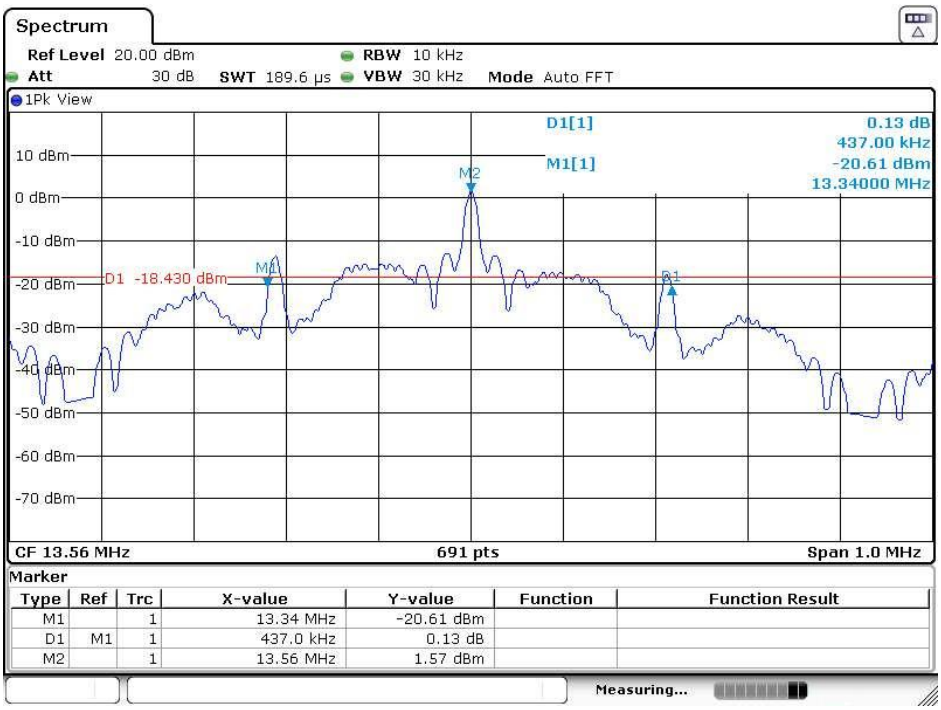

5. CONDUCTED EMISSION MEASUREMENT

5.1 Power Line Conducted Emission Limits

Operating frequency band. In case the emission fall within the restricted band specified on Part 207(a) limit in the table below has to be followed.

FREQUENCY (MHz)	Conducted Emissionlimit (dBuV)	
	Quasi-peak	Average
0.15 -0.5	66 - 56 *	56 - 46 *
0.50 -5.0	56.00	46.00
5.0 -30.0	60.00	50.00

Note:

(1) The tighter limit applies at the band edges.

(2) The limit of " * " marked band means the limitation decreases linearly with the logarithm of the frequency in the range.

The following table is the setting of the receiver

Receiver Parameters	Setting
Attenuation	10 dB
Start Frequency	0.15 MHz
Stop Frequency	30 MHz
IF Bandwidth	9 kHz

5.2 Test Procedure

a. The equipment was set up as per the test configuration to simulate typical actual usage per the user's manual. The EUT is a tabletop system, a wooden table with a height of 0.8 meters is used and is placed on the ground plane as per ANSI C63.4.

b. Support equipment, if needed, was placed as per ANSI C63.4.

c. All I/O cables were positioned to simulate typical actual usage as per ANSI C63.4.

d. If a EUT received DC power from the USB Port of Notebook PC, the PC's adapter received AC120V/60Hz power through a Line Impedance Stabilization Network (LISN) which supplied power source and was grounded to the ground plane.

e. All support equipments received AC power from a second LISN, if any.

f. The EUT test program was started. Emissions were measured on each current carrying line of the EUT using a spectrum Analyzer / Receiver connected to the LISN powering the EUT. The LISN has two monitoring points: Line 1 (Hot Side) and Line 2 (Neutral Side). Two scans were taken: one with Line 1 connected to Analyzer / Receiver and Line 2 connected to a 50 ohm load; the second scan had Line 1 connected to a 50 ohm load and Line 2 connected to the Analyzer / Receiver.

g. Analyzer / Receiver scanned from 150 KHz to 30MHz for emissions in each of the test modes. and the test data has been listed in 3.4

5.3 Test Setup

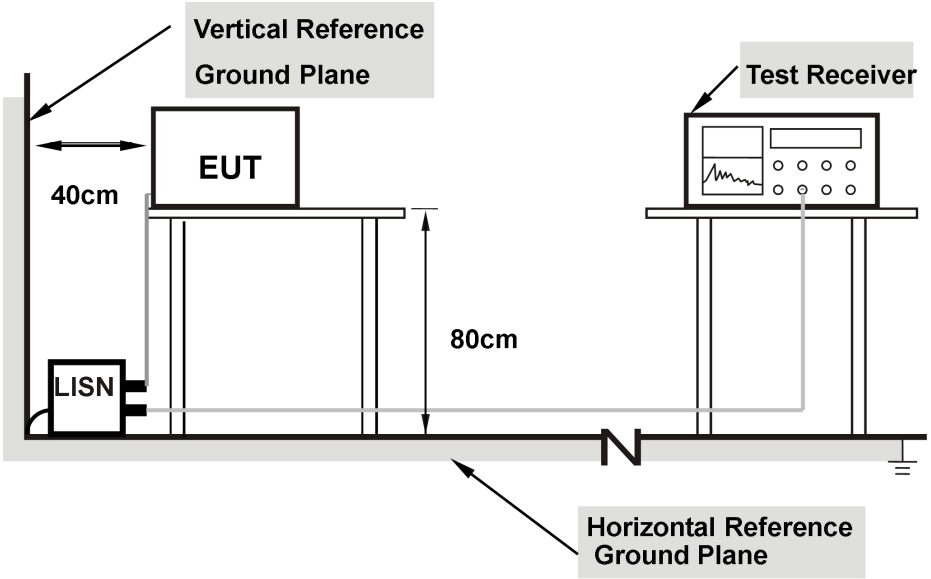

Note: 1.Support units were connected to second LISN.

2.Both of LISNs (AMN) are 80 cm from EUT and at least 80 from other units and other metal planes

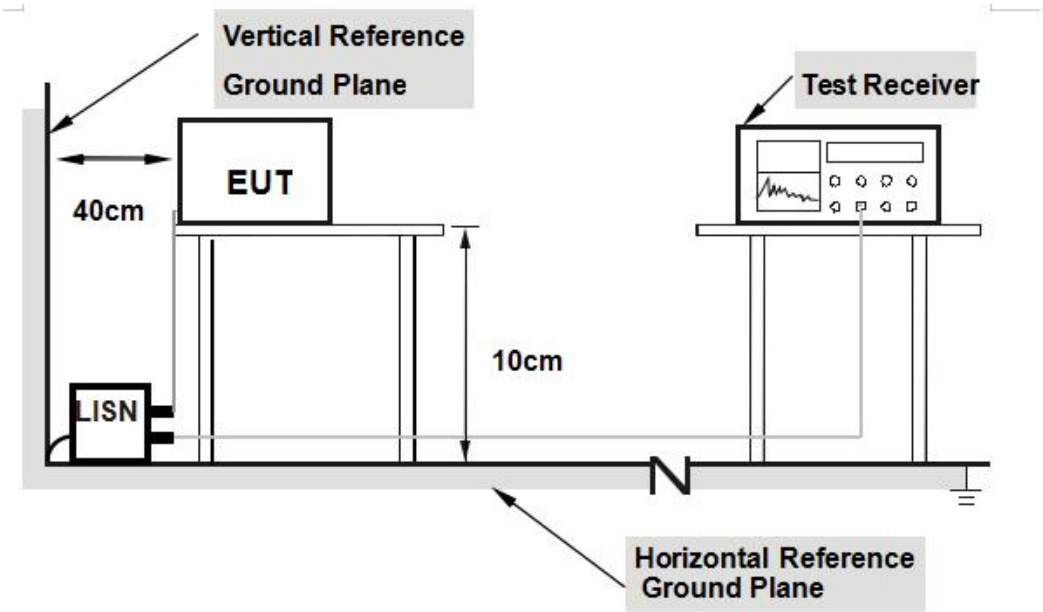

Note: 1.Support units were connected to second LISN.

2.Both of LISNs (AMN) are 10 cm from EUT and at least 10 cm from other units and other metal planes support. units.

5.4 Test Result

Temperature:	23.5℃	Relative Humidity:	59%
Phase:	L	Test Mode:	Mode 1
Test Voltage:	AC 120V/60Hz		

No.	Frequency (MHz)	Reading (dBuV)	Correct Factor(dB/m)	Result (dBuV/m)	Limit (dBuV/m)	Margin (dB)	Remark
1	0.1894	34.42	10.09	44.51	64.06	19.55	QP
2	0.1894	26.34	10.09	36.43	54.06	17.63	AVG
3	0.2805	32.21	10.03	42.24	60.80	18.56	QP
4	0.2805	26.32	10.03	36.35	50.80	14.45	AVG
5	0.3750	38.12	10.02	48.14	58.39	10.25	QP
6	0.3750	32.00	10.02	42.02	48.39	6.37	AVG
7	0.4110	41.54	10.02	51.56	57.63	6.07	QP
8	0.4110	22.34	10.02	32.36	47.63	15.27	AVG
9	0.4695	32.82	10.02	42.84	56.52	13.68	QP
10	0.4695	27.89	10.02	37.91	46.52	8.61	AVG
11	0.5639	22.38	10.01	32.39	56.00	23.61	QP
12	0.5639	17.86	10.01	27.87	46.00	18.13	AVG

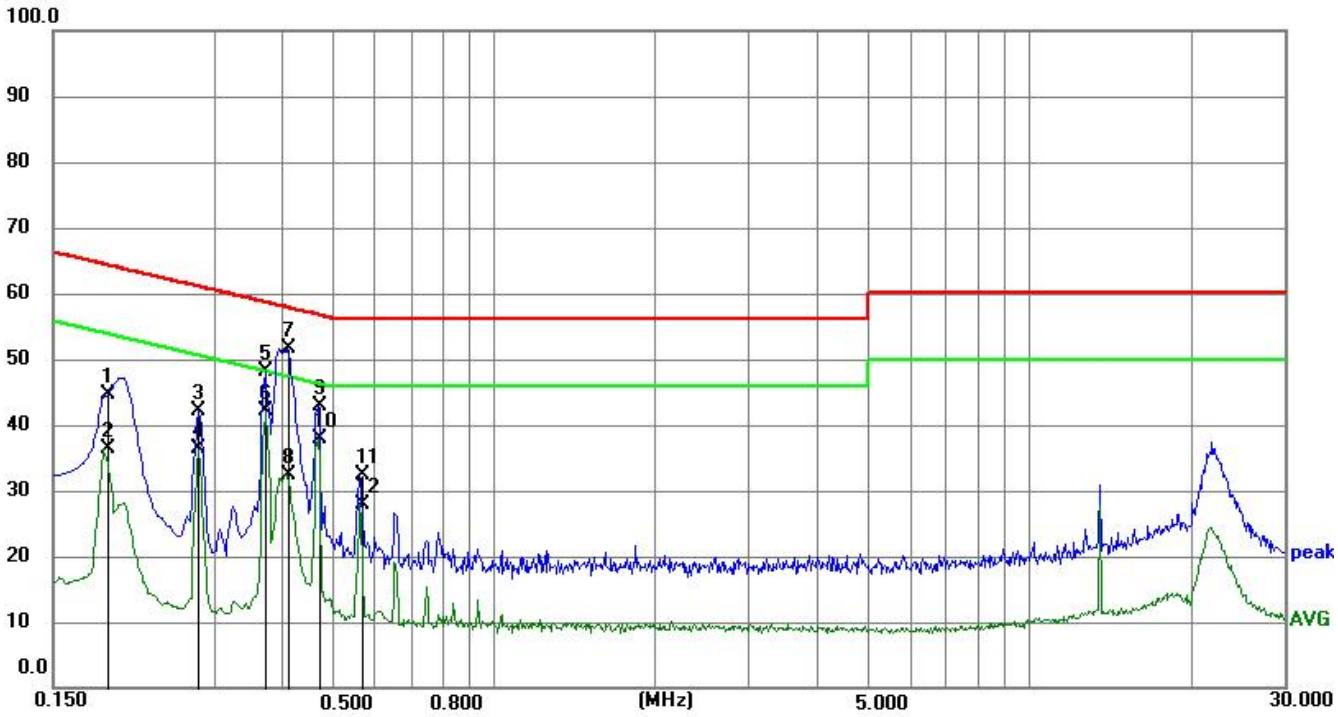

Temperature:	23.5℃	Relative Humidity:	59%
Phase:	N	Test Mode:	Mode 1
Test Voltage:	AC 120V/60Hz		

No.	Frequency (MHz)	Reading (dBuV)	Correct Factor(dB/m)	Result (dBuV/m)	Limit (dBuV/m)	Margin (dB)	Remark
1	0.1860	34.60	10.06	44.66	64.21	19.55	QP
2	0.1860	25.06	10.06	35.12	54.21	19.09	AVG
3	0.2805	35.08	10.04	45.12	60.80	15.68	QP
4	0.2805	27.72	10.04	37.76	50.80	13.04	AVG
5	0.3750	39.95	10.01	49.96	58.39	8.43	QP
6	0.3750	33.70	10.01	43.71	48.39	4.68	AVG
7	0.4110	41.61	10.00	51.61	57.63	6.02	QP
8	0.4110	22.19	10.00	32.19	47.63	15.44	AVG
9	0.4695	31.90	10.01	41.91	56.52	14.61	QP
10	0.4695	27.71	10.01	37.72	46.52	8.80	AVG
11	0.5595	19.52	10.00	29.52	56.00	26.48	QP
12	0.5595	14.01	10.00	24.01	46.00	21.99	AVG

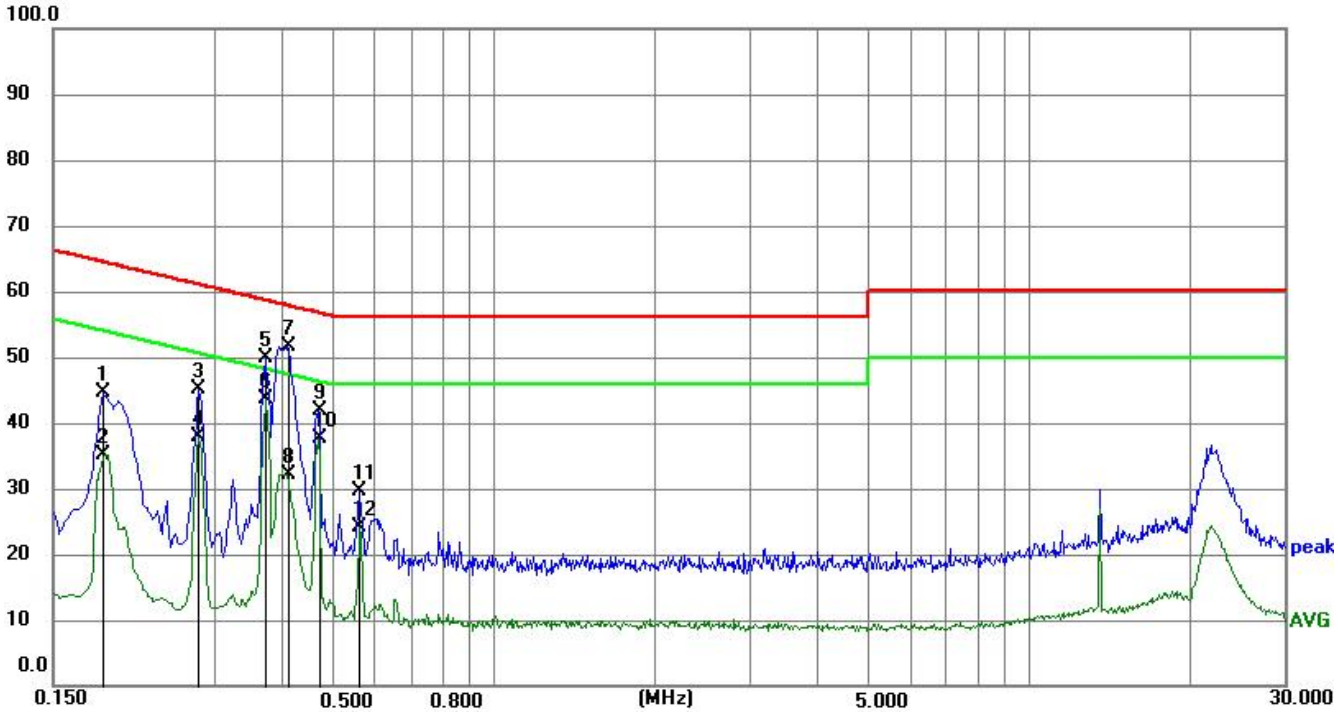

6 FREQUENCY STABILITY MEASUREMEN

6.1 LIMIT

The frequency tolerance of the carrier signal shall be maintained within +/- 0.01% (100ppm) of the operating frequency over a temperature variation of -20 degrees to +50 degrees C at normal supply voltage, and for a variation in the primary supply voltage from 85% to 115% of the rated supply voltage at a temperature of 20 degrees C. For battery operated equipment, the equipment tests shall be performed using a new battery

6.2 TEST PROCEDURE

1. The transmitter output (antenna port) was connected to the spectrum analyzer.
2. EUT have transmitted signal and fixed channelize.
3. Set the spectrum analyzer span to view the entire emissions bandwidth.
4. Set RBW = 1 kHz, VBW = 3 kHz with peak detector and maxhold settings.
5. The fc is declaring of channel frequency. Then the frequency error formula is (fc-f)/fc × 10^6 ppm and the limit is less than ±100ppm.
6. Extreme temperature rule is -20°C~50°C.

6.3TEST RESULTS

Test Frequency:13.56MHz Temperature:20℃				
Supply Voltage (V)DC	Test Result (MHz)	Deviation (kHz)	Limit ±0.01%(kHz)	Result
102	13.55972	-0.28	1.3560	Pass
120	13.55971	-0.29	1.3560	Pass
138	13.55973	-0.27	1.3560	Pass

Test Frequency:13.56MHz		Normal Voltage:120 Vac		
Temperature (℃)	Test Result (MHz)	Deviation (kHz)	Limit ±0.01%(kHz)	Result
-20	13.55982	-0.18	1.3560	Pass
-10	13.55979	-0.21	1.3560	
0	13.55976	-0.24	1.3560	
10	13.55976	-0.24	1.3560	
20	13.55978	-0.22	1.3560	
30	13.55982	-0.18	1.3560	
40	13.55976	-0.24	1.3560	
50	13.55981	-0.19	1.3560	

Note:Deviation (KHz)=(Test Result-13.56MHz)*1000

7 ANTENNA REQUIREMENT

7.1 STANDARD REQUIREMENT

15.203 requirement: For intentional device, according to 15.203: an intentional radiator shall be designed to ensure that no antenna other than that furnished by the responsible party shall be used with the device.

7.2 EUT ANTENNA

The antennas used for this product are internal antenna and other than that furnished by the responsible party shall be used with the device, the maximum peak gain of the transmit antenna is -0.58dBi.

※※※※※END OF THE REPORT※※※※※