Entertainment System of Family KTV

Bring happiness home

Professional wireless microphone equipment for karaoke

With Microphone S-103

Product Instructions

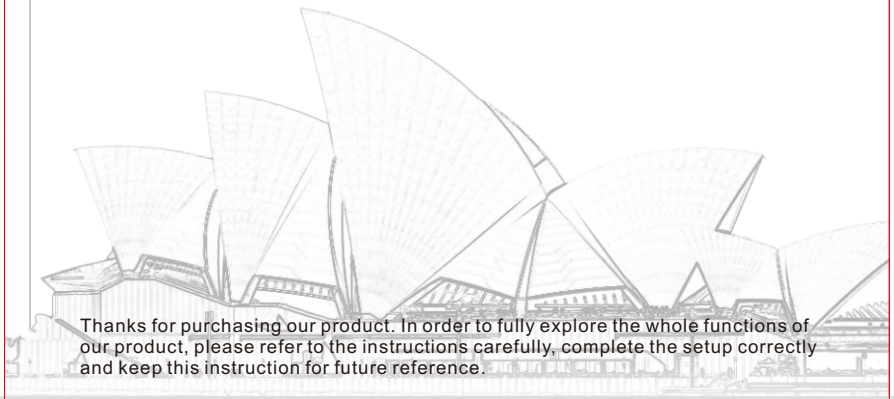

Thanks for purchasing our product. In order to fully explore the whole functions of our product, please refer to the instructions carefully, complete the setup correctly and keep this instruction for future reference.

Diagram on Function of Host Machine

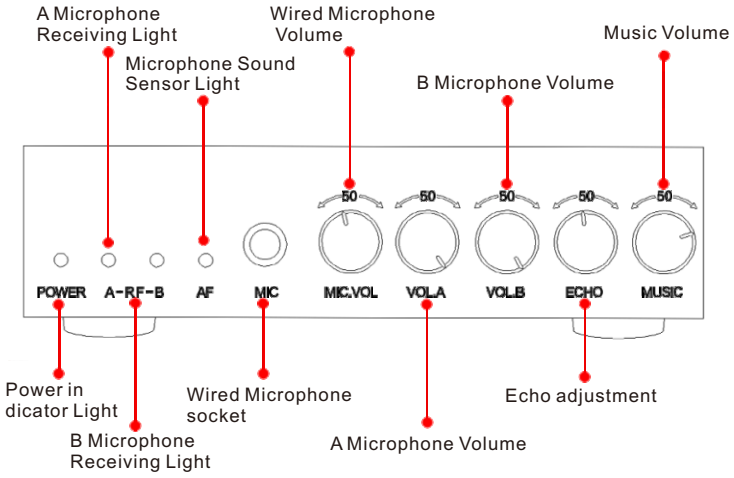

Turn on the machine, power indicator light is red.
Turn on the switches of wireless microphone A or B, the corresponding A or B microphone receiving light is green.
Speaking to microphone, sound sensor light is on when microphone is in operating order.
MIC.VOL, a knob adjusts volume of wired microphone.
VOL.A, a knob adjusts volume of A wireless microphone.
VOL.B, a knob adjusts volume of B wireless microphone.
ECHO, a knob adjusts the volume of echo.
MUSIC, a knob adjusts input audio source.

Diagram on Function of Host Machine

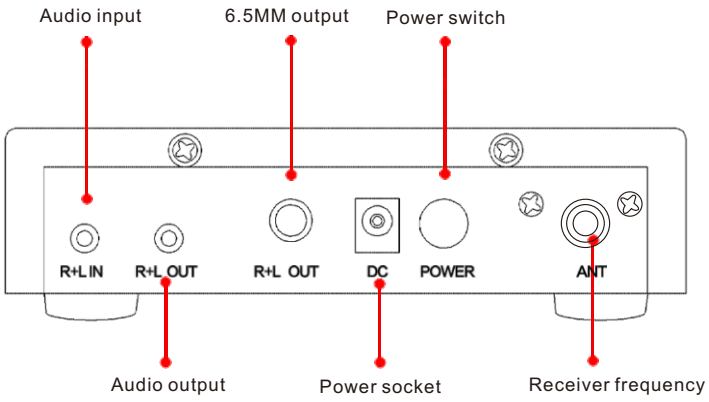

POWER, Power switch

R+L IN, Audio input

R+L OUT, Audio output

R+L OUT, 6.5MM output

DC, Power socket

When the power is on, Bluetooth is on.

Diagram on Function of Microphone

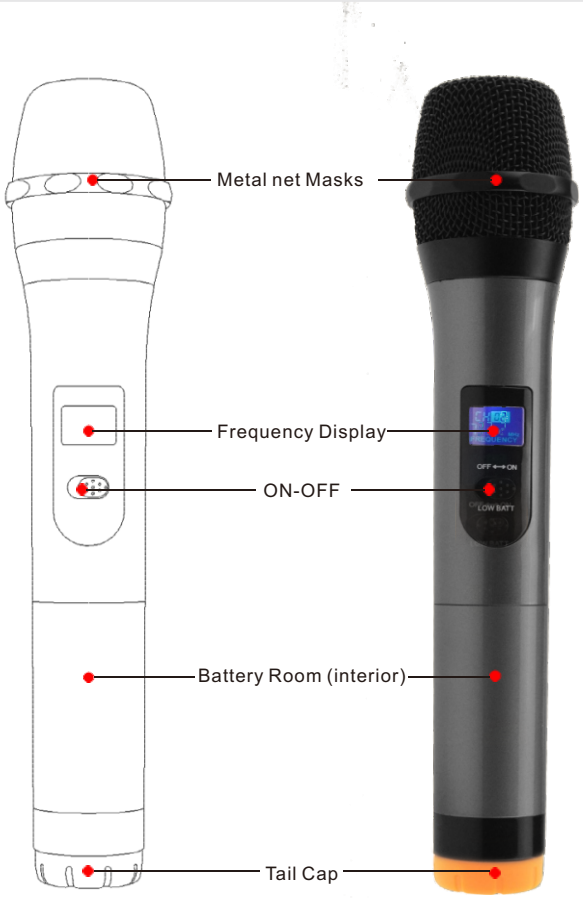

Bring happiness home

Schematic Illustration of Audio Cable Connecting Karaoke

Set Top Box(STB)

TV Computer mobile phone

Projector

earphone socket, audio output, AV output, video or audio output

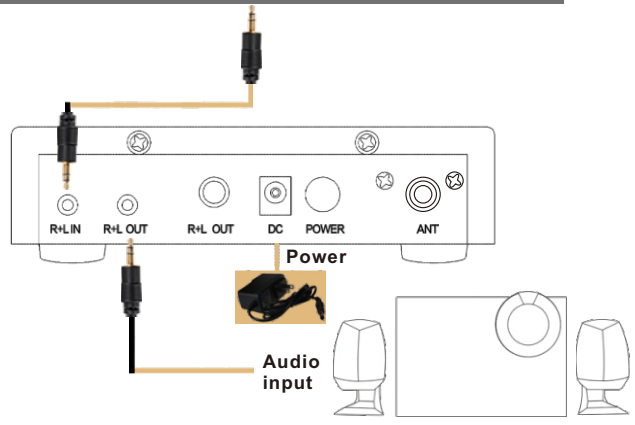

Connection method:

1. Using the complimentary audio cable connects one of the earphone socket, audio output, AV output or video & audio output and the audio input socket of R+L IN.
2. Then, connecting audio output socket of R+L OUT in host machine and audio input.
3. Connecting to the power source for host machine, inserting AA battery in microphone, the equipment is ready to use.

Attention: wirings for connection are determined by audio source device and specific circumstances of audio sockets.

Schematic Illustration of Bluetooth connecting Karaoke

Set Top Box(STB)

TV Tablet mobile phone

Projector

Bluetooth search (playing sources devices)

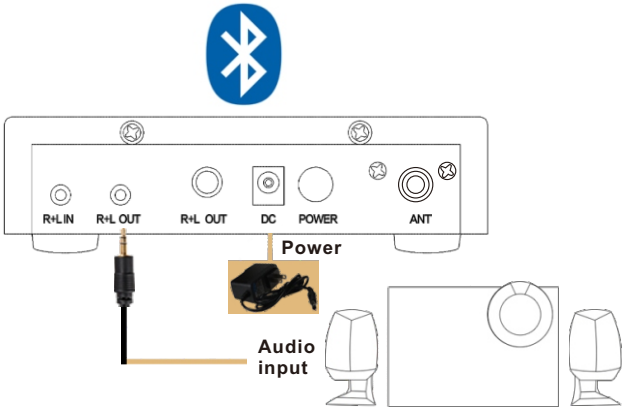

Connection method:

1.Playing sources devices open Bluetooth to search devices.
2.Searching the Bluetooth of microphone's host machine.
3.Completing the matching of playing sources devices and microphone.
4.Then, connecting audio output socket of R+L OUT in host machine and audio input.
5.Connecting to the power source for host machine, inserting AA battery in microphone, the equipment is ready to use.

Attention: wirings for connection are determined by audio source device and specific circumstances of audio sockets.

Instruction and Connection Manual

1.Please place host machine (receiver) near desktop or multimedia speakers, connect the power cord. And use the audio cable provided by the manufacture connecting machine’s R+L OUT at one end and MIC IN of desktop or R+L IN of multimedia speakers at the other end. Switching on the power of host machine (receiver), power indicator light will be on and the machine will be in standby mode.
(*To ensure a favorable signal condition, you'd better not place the receiver at dead range.)

2.Open battery cover of handheld microphone, insert batteries into battery holder and close the cover.
(* There are electrode tab on batteries and the cover, please do not assemble batteries reversely.)

3.Switching on the NO gear of handheld microphone, the handheld display lightens. Meanwhile, the corresponding indicator light of host machine (receiver) will be lit as receiving effective signal from microphone. Adjust volume knob of channel and pro amplifier appropriately to make adequate volume for system. At this time, speaking to the microphone, a voice comes out.

4.When red light of handheld microphone is on for a long time, the battery is under voltage, and we need to change a new battery.

5.There is an audio output socket design on the receiver to meet the need of playing in diverse broadcasting, sound recording devices and occasions.

6.Additional function of blamp squelch adjustment enables the machine to effectively strengthen anti－interference receiving feature.

Technical Indicators

Desk Type Receiver

Receiving Frequency:470-608MHZ
Frequency Stability: <0.002%
Sensitivity: 2/MV
Adjacent Frequency Interference Ratio: >90DB
Mirror Interference Ratio: >88DB
Signal-noise Ratio: >95DB
Audio Output: 0-300MV
Operating Range: 10-30 meters in standard conditions
Receiving Channel: Line 2
Supply Voltage: AC/100-240V
Bluetooth: 4.1
Antenna: built-in type

Microphone

Carrier Frequency :470-608MHZ
Frequency Stability: <0.002%
Transmitted Power: 16MW
Current Dissipation: <25MA
Sputious Emission: < principal wave 40DB
Standard: fixed frequency
Vibration Pickup: 600Ω ONE-TOUCH
Battery: 3.0V

Comprehensive Index

Dynamic Range: >95DB
Systematic Distortion:（<1% , 1KHZ modulation）
Frequency Response：50HZ-18KHZ (3±DB)

*NOTE: The parameter requires to be modified due to the improvement of the machine. All specification supplied herein are subject to change without notice at any time.

Safety Instructions

Detail Guide: please read the safety operating instructions carefully before using this product.
Preservation Guide: please put the instruction in a safe place so as for future reference.
Caution: please refer to the cautions labeled on the machine or on the operating procedures.
Following Guide: please observe all operating procedures and instructions.
Using and Preservation: please not place or use the machine in environment of high degree humidity, electromagnetic field, strong direct sunlight and high temperature.
Cleaning: the power plug must be plucked before cleaning. Please use wet rags to clean instead of liquid or spray.
Attachment: please use accessory products provided or approved by manufactures.
Maintenance: machine should be repaired by qualified repairman instead of self-maintenance. Because the action of opening or removing the outer cover shall place you at risk of touching dangerous voltage or other dangers.
Replacement Parts: if needed to replace parts, the components used by mechanic should meet the specifications of manufactures or be identical to the original parts.Improper replacement would lead to fire, electric shock or other danger.

Safety Inspection: please ask the mechanic to conduct safety inspection when he finishes the maintenance task. So as to determine whether the machine operates in natural service and meets the safety requirements.
Adjustment: Do not arbitrarily remove the outer cover of the machine, adjust adjustable circuit board components when the machine is out of order or in decreased performance, to avoid damage to the product. The machine should be repaired by the mechanic with professional devices or contact manufacture or local dealer. We make an endeavor to live up to the best and serve for the customers.

After-Sales Service and Instruction

Dear Customers, in order to practically guarantee your rights and interests, clear up responsibility and action of agents and company, please refer to the following items.

1.Product warranty card is necessary credential of free after-sales service during the warranty period.

2.According to three guarantees (for repair, replacement or compensation of faulty products) of install, and sale. If product has problems, customers with product warranty card could contact dealer to enjoy service supported by our company.

3.The company guarantees that customers could return or change the products if quality problems appear within 7 days from the date of sale (signing date of customers shall prevail), change or maintain product within 7 to 15 days from the date of sale. If problems occur within 1 year from the date of sale, customer could enjoy the service of free maintenance. We provide maintenance service (after-sales service sites only charges fee of component material) for customers if product appear quality problem within 3 years from the date of sale. Please carefully complete the product warranty card with dealer when purchasing our product.

4.Customers shall not enjoy the three guarantees service if the following circumstances occur.
1.Guarantee period is over.
2.The product breaks down due to inappropriate usage, maintenance and preservation failing in accordance with product instruction.
3.Product is damaged due to being repaired by not the mender that assumes three principles.
4.Customers do not have product warranty card.
5.The contents on product warranty card are not in accordance with actual product or have been alerted.
6.Product breaks down due to force majeure.

Precautions

1. This product suggests the ideal tuning effect as follows:
Cable volume adjustment (MIC.VOL): Adjust 70%
Microphone A volume adjustment (VOL.A): adjust 80%
Microphone B volume adjustment (VOL.B): adjust 80%
Music Volume Adjustment (MUSIC): Adjust 70%
Adjust the way according to the actual needs of addition and subtraction, in order to achieve the best results.

2. the host will turn on the power, Bluetooth will wait for pairing, 2 minutes later if not connected to Bluetooth work, Bluetooth will take the initiative to stop the connection (there is also a tone to inform) If you need to connect, re-open the host switch can be connected to a successful message.

3. In the course of the use of noise, wave, please set the host position, try not to close to other audio equipment.When used, pay attention to whether the battery is sufficient, full charge of the microphone display will be bright, lack of electricity, the microphone will be dark light to the display.

4. If you do not use it for a long time, remove the battery from the microphone.
The host does not long-term power supply, the host switch off.
Unplug the power adapter.

Note: The machine may need to change the parameter design due to improvement without affecting the use, the changes are subject to change without notice.

FCC Statement

This device complies with Part 15 of the FCC rules. Operation is subject to the following two conditions: 1) this device may not cause harmful interference, and 2) this device must accept any interference received, including interference that may cause undesired operation.
Note: This equipment has been tested and found to comply with the limits for a Class B digital device, pursuant to part 15 of the FCC Rules. These limits are designed to provide reasonable protection against harmful interference in a residential installation. This equipment generates uses and can radiate radio frequency energy and, if not installed and used in accordance with the instructions, may cause harmful interference to radio communications. However, there is no guarantee that interference will not occur in particular installation. If this equipment does cause harmful interference to radio or television reception, which can be determined by turning the equipment off and on, the user is encouraged to try to correct the interference by one or more of the following measures:
--Reorient or relocate the receiving antenna.
--Increase the separation between the equipment and receiver.
--Connect the equipment into an outlet on a circuit different from that to which the receiver is connected.
--Consult the dealer or an experienced radio/TV technician for help.
Changes or modifications not expressly approved by the party responsible for compliance could void the user's authority to operate the equipment.

Radiation Exposure Statement
This device complies with RF radiation exposure limits set forth for an uncontrolled environment. This transmitter must not be co-located or operating in conjunction with any other antenna or transmitter.