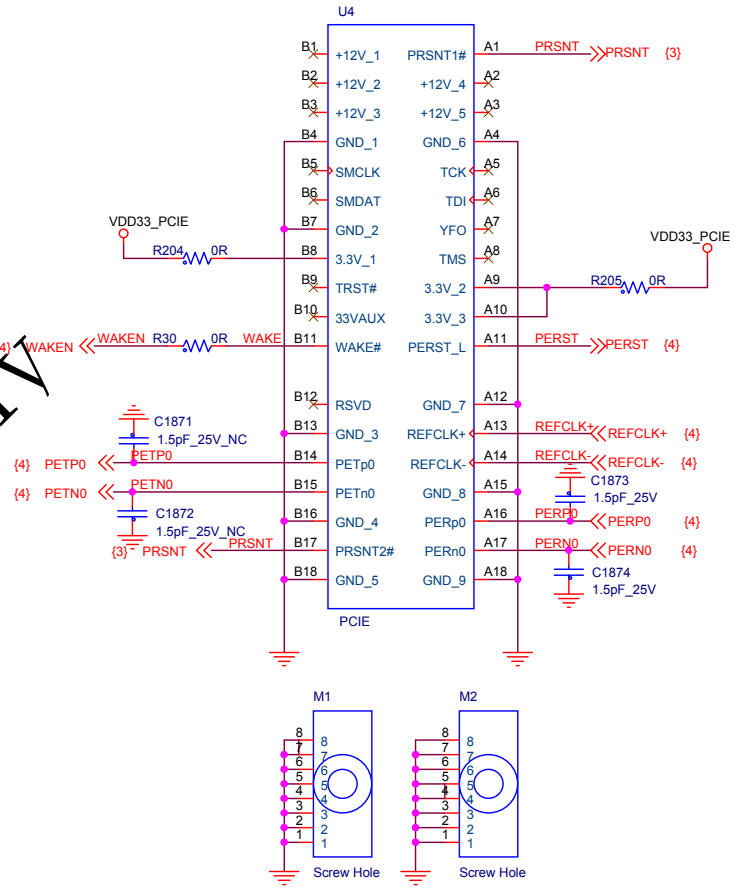

For certification only

tp-link	TP-Link Corporation Limited	
Title	03_Power_PCIe	
Size B	Document Number Archer T2E(US)	Rev 1.0
Engineers	Lijiakang	
Date: Friday, November 20, 2020	Sheet 3 of 4	

保密文件
严禁拷贝
受控文件
TRCC
2020-12-09 14:26

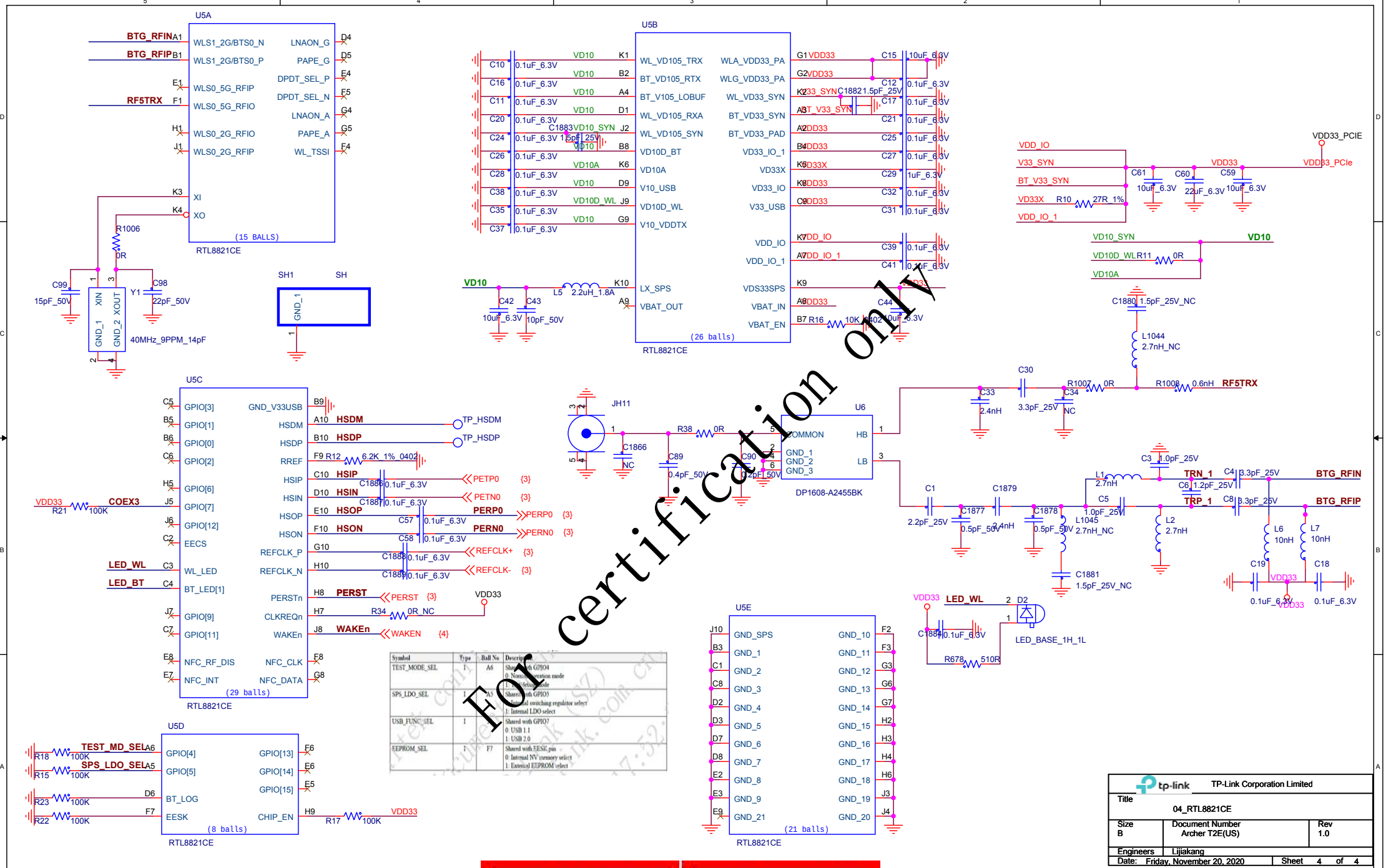

Symbol	Type	Ball No	Description
TEST_MODE_SEL	I	A6	Shared with GPIO4 0: Normal operation mode 1: Test mode
SPS_LDO_SEL	I	A5	Shared with GPIO5 0: Internal switching regulator select 1: Internal LDO select
USB_FUNC_SEL	I		Shared with GPIO7 0: USB 1.1 1: USB 2.0
EEPROM_SEL	I	F7	Shared with EESK pin 0: Internal NV memory select 1: External EEPROM select

2020-12-09 14:26