UbiqiSense

User manual

UBIcapture sensor manual version 1

UBIcapture

UC2

1. Preparations

Please read carefully and keep in a safe place.
Prior to installation, check all components for damage, and do not use the product if damaged.
Make sure to map out which areas in your building you would like to monitor, what metrics you want to capture, and how many sensors you need for optimal results. For assistance, please contact UbiqiSense or your local partner.
Copyright. Reproduction of this document either in whole or in part only with our written consent.
Note: This document is subject to change for further technical development.

2. About

UbiqiSense smart sensor solutions are made of intelligent sensor devices, gateways and data analytics tools. At the heart of UbiqiSense systems are UBIcapture devices, while connectivity to building automation or access to sensing data through local or cloud services is enabled by the UBIgateway.
UBIcapture devices observe and extract information about people and objects seen by the device. All devices are equipped with intelligent motion sensing and remote configuration capabilities. By means of a visual sensor and artificial intelligence, captured images are processed by the embedded computer vision algorithm and only meta-data is transmitted from the device. Images are never stored or transmitted by any sensor.

3. UBIcapture

UBIcapture sensors are developed for indoor use only, and intended for mounting on vertical walls (See fig. 12 & 13).
Two models are available. The high definition (HD) and the wide angle (WA). The WA model is used to cover smaller rooms, as its maximum range is 7m and its field of view offers more versatility. The HD model instead is used to cover bigger rooms as multiple sensors can be combined and more accuracy can be achieved.

Functions:

UBIcapture is an all-in-one sensor which:
- Detects and counts people
- Locates position of people
- Tracks movement
- Detects whether people are walking, standing, sitting or lying down

In order to properly display in your BMS or Cloud, UBIcapture must have a designated gateway commissioned by UbiqiSense. From the gateway, the following values can be transmitted:
- RoomID
- Number of people
- PersonID
- X & Z coordinates/ PersonID
- Standing/Sitting
- Direction of movement
- Foot fall

Installation instructions:

For commissioning of sensors, building and room setup, please contact UbiqiSense or your local partner.

4. Mounting

The sensor should be installed on vertical walls at a height of at least 2 m, depending on room size, use case and single/dual sensor installation (see fig. 12 & fig. 13).
Select an appropriate mounting location, giving consideration to sensor field of view and mounting height (see fig. 10, fig.11 & fig. 14).
Make sure the sensor has adequate visual range to cover the desired area.
In order to properly detect footfalls, the sensor needs to be mounted in a range between 3 m and 7 m (See Fig. 16).
NOTE: Sensor performance may be limited by poor lighting conditions.
Make sure to have an available power supply within 3 m of the mounting location for each sensor.
The sensor field-of-view must be and remain unobstructed.
The site of installation must not be facing directly into the sun or sharp light.
Mark any necessary drill holes and insert wall plugs if needed.
Make sure the wall mount is attached in the right way, and that sensor is aimed correctly (see fig. 4 & fig. 5). The HD sensor's field-of-view is 60° horizontally and 35° vertically, whilst the WA sensor's field-of-view is 73° horizontally and 35° vertically. In order to achieve the desired viewing angle, the wall mount, that has a 45° angle, can be mounted to the wall in both

verse: either with the “hinge” in the right side (see fig. 6) or on the left side (see fig. 7). This way the sensor can be mounted to every angle. To achieve optimal placement see fig. 17 & 18.

5. Installation & Calibration

For single sensor installation:

Make sure the UBIgateway is within Wi-Fi range of all sensors. If distances are too great, Wi-Fi extenders may be needed (NOTE: less applicable if the building’s existing Wi-Fi connection is being used).

Gateway must not be obstructed or hidden behind metal or concrete walls, or other things that could negatively affect the Wi-Fi signal.

Antennae must be firmly screwed onto the Gateway and pointing directly up or directly down.

Connect UBIgateway to internet via ethernet, and power on the UBIcapture and the UBIgateway.

Allow 1 minute for the sensors to download latest firmware updates and connect to the UBIgateway.

For dual sensor installation:

Position the sensors correctly to achieve optimal performance and room coverage (see fig. 11 & fig. 13)

NOTE: In order to properly display in your BMS or Cloud, UBIcapture must have a designated gateway commissioned by UbiqiSense.

6. Maintenance & Care

The sensor housing can be wiped for dust to prevent potential overheating, and the optical lens may be cleaned with a damp cloth if needed (do not use cleaning agents).

7. Disposal

Electrical and electronic equipment, accessories and packaging must be recycled in an environmentally compatible manner. Do not dispose of electrical and electronic equipment as domestic waste.

EU countries only: under the current European Directive on Waste Electrical and Electronic Equipment and its implementation in national law, electrical and electronic equipment no longer suitable for use must be collected separately and recycled in an environmentally compatible manner.

9. Technical specification

	HD	WA
Sensor Size (H x W x D)	120 × 52 × 22,5 mm	
Mount Dimensions (H x W x D)	65 × 21 × 12 mm	
Sensor Connection	2.4/5 GHz WLAN (802.11b/g/n/ac)	
Wi-Fi requirements	Security: WPA2-Personal Mode: b or b+g (2.4/5 GHz) Group cipher: ccmp Pairwise ciphers: ccmp	
Housing color	White	
Housing material	Plastic	
IP rating	IP20	
Temperature range	0°C to 40°C	
Light value	20 - 10000 lux	
Sensor weight	72 g	
Mount weight	13 g	
Sensor type	IoT	
Technology	AI optical sensor	
Detection speed	1-10 fps	
Optical field of view	60° × 35°	84° × 45°
Maximum Range	10 m	7m
Application	Indoor	
Mounting	Vertical wall	
Mounting height	2 m to 3 m	
Optimal mounting height	2.10 m	
Scalability	1-50 per gateway	
Power input	12V/1A DC jack 5V/2A USB-C	
Power adapter (main supply)	AC 100-240V, EU plug	
Power consumption	2W(peak)	
Alternative power source	PoE+ (standard 802.3at)	
Certification	CE approved	

Fig.1

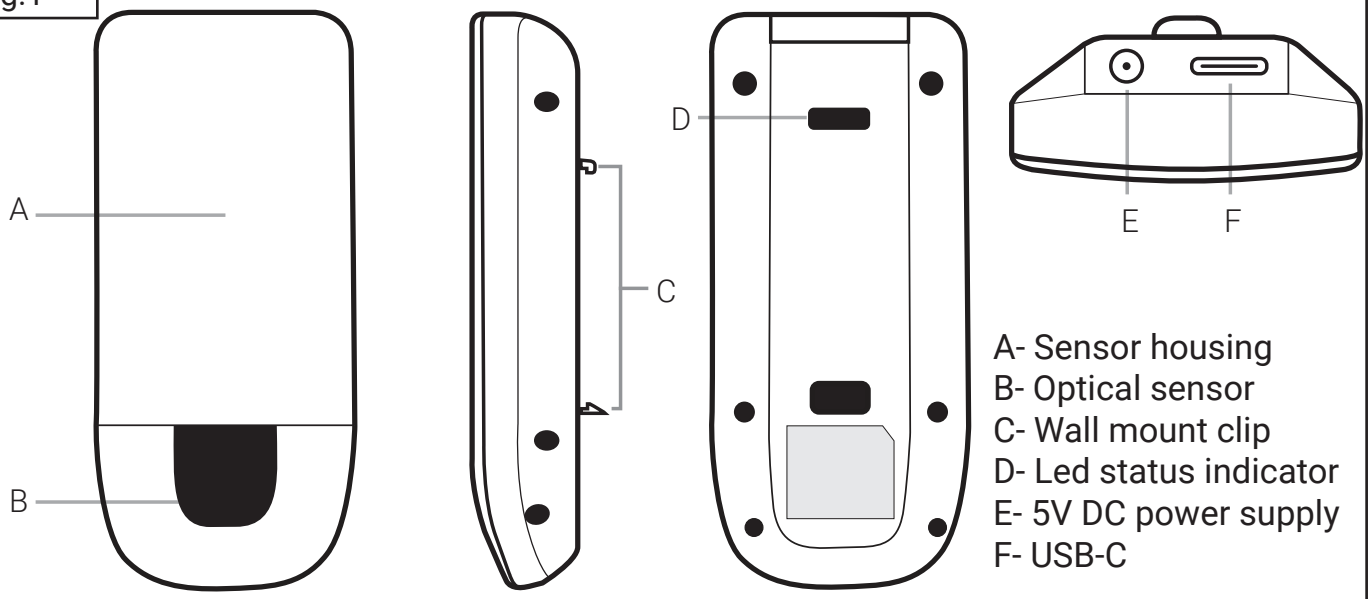

A- Sensor housing
B- Optical sensor
C- Wall mount clip
D- Led status indicator
E- 5V DC power supply
F- USB-C

Fig.2

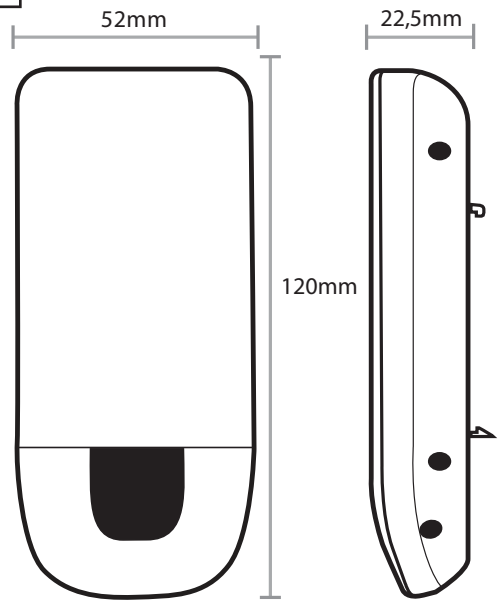

Fig.3

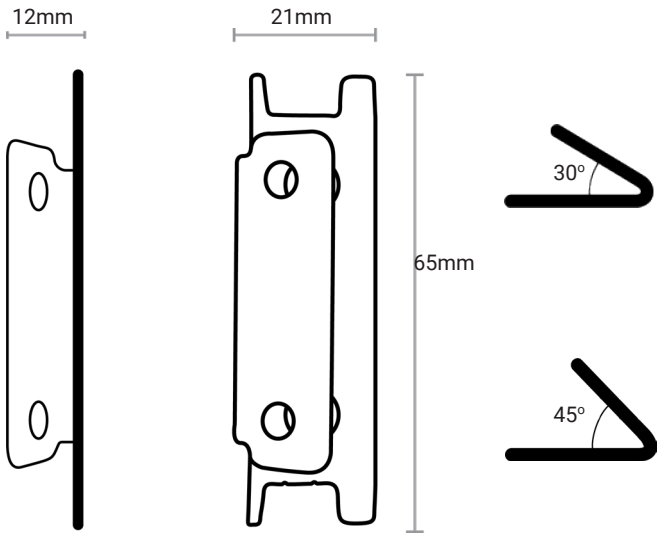

Wallmount

Fig.4

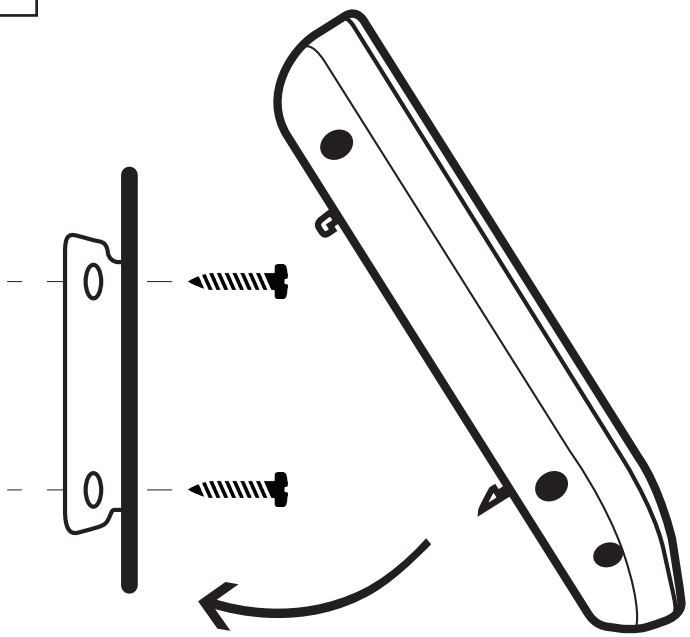

Fig.5

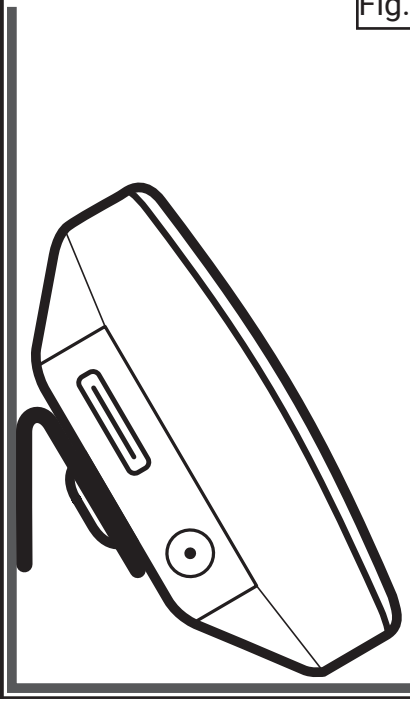

Fig.6

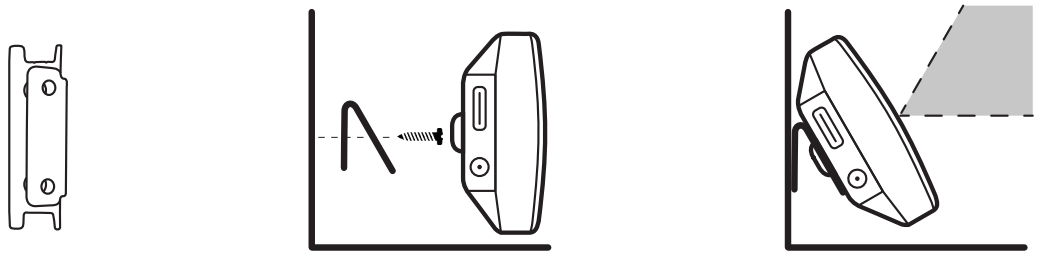

Fig.7

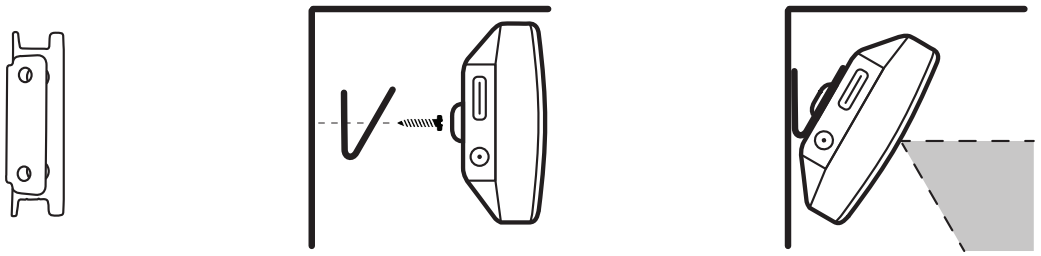

Fig.8

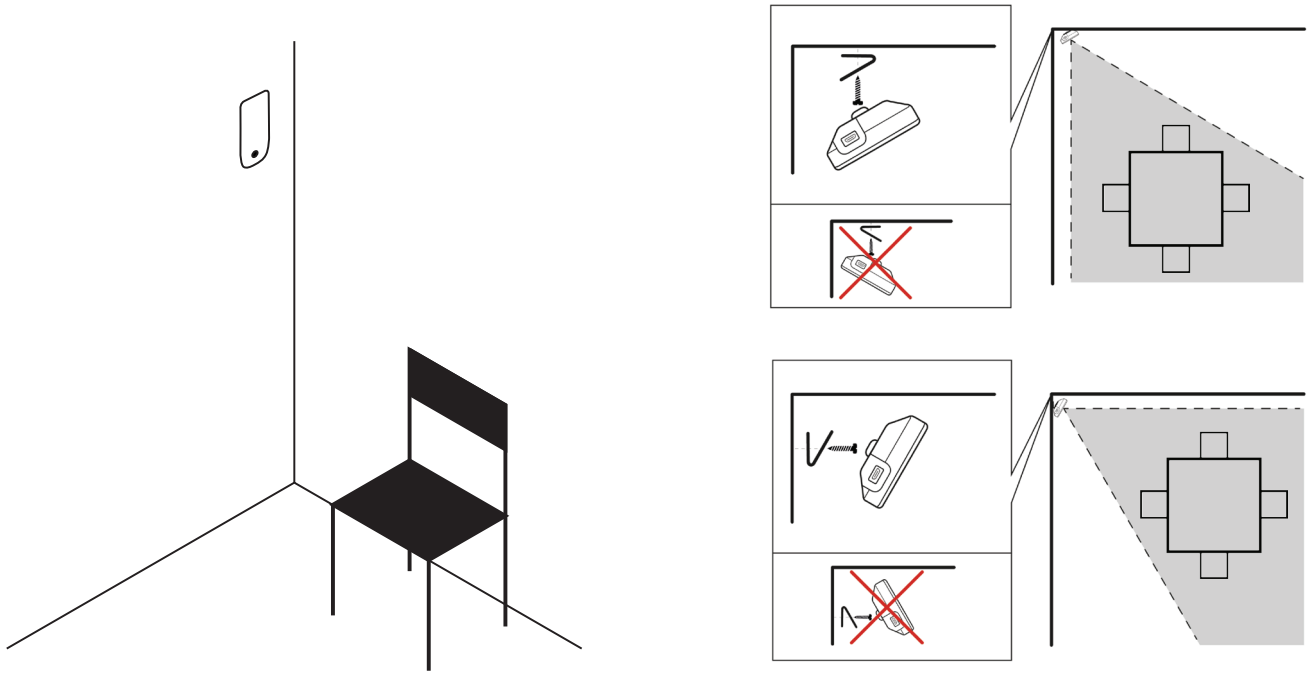

Fig.9

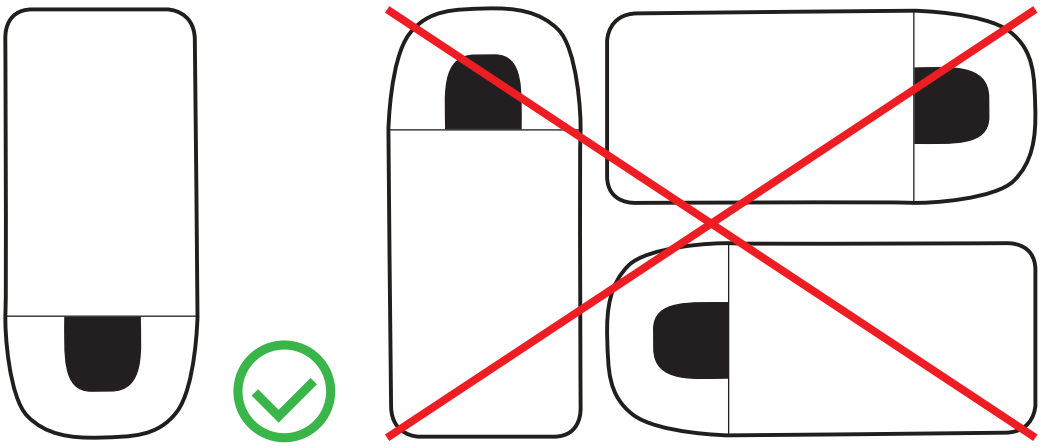

Fig.10

Top view single sensor

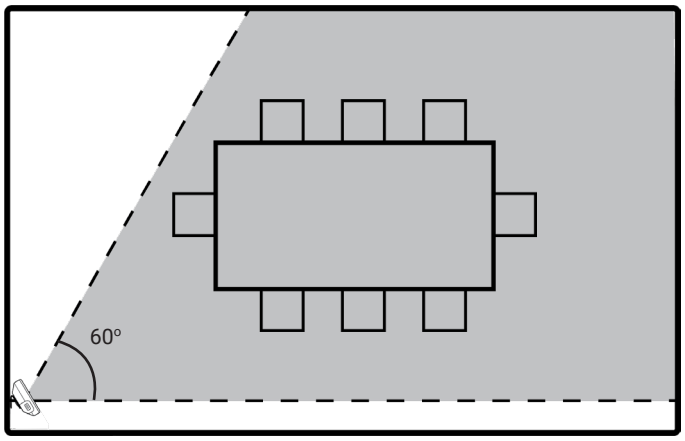

Fig.11

Top view dual sensors

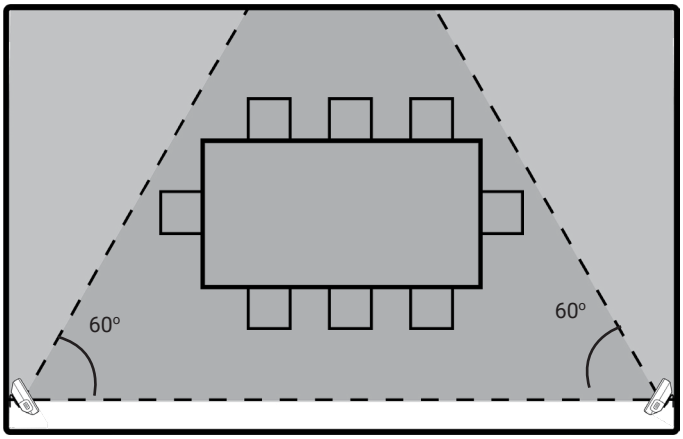

Fig.12

Side view single sensor

Max visual range: 10m

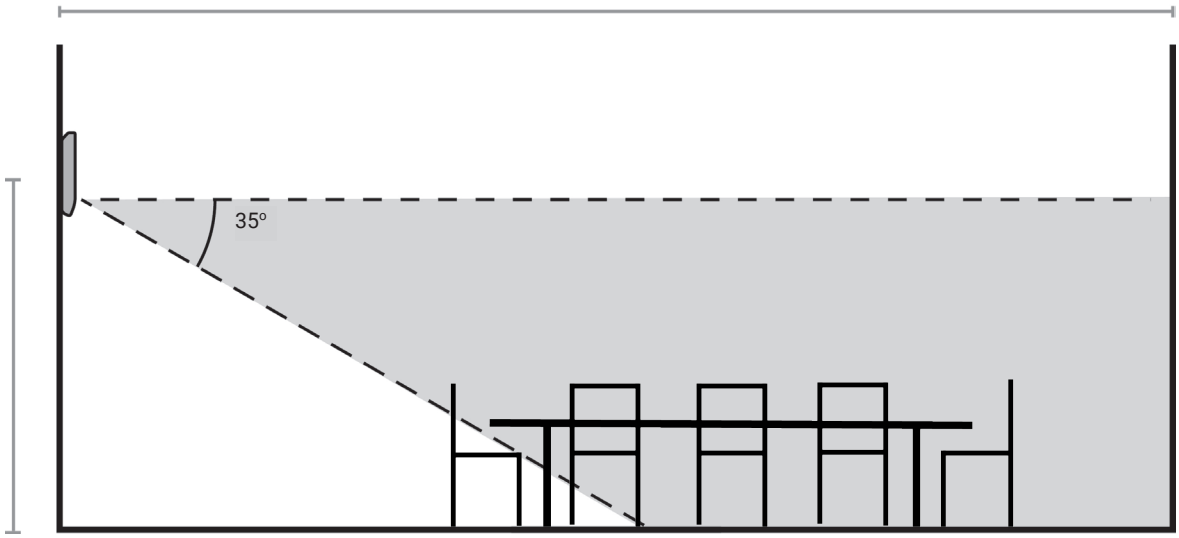

Height:
Between
2m – 2.4m

Fig.13

Side view dual sensors

Max visual range: 10m

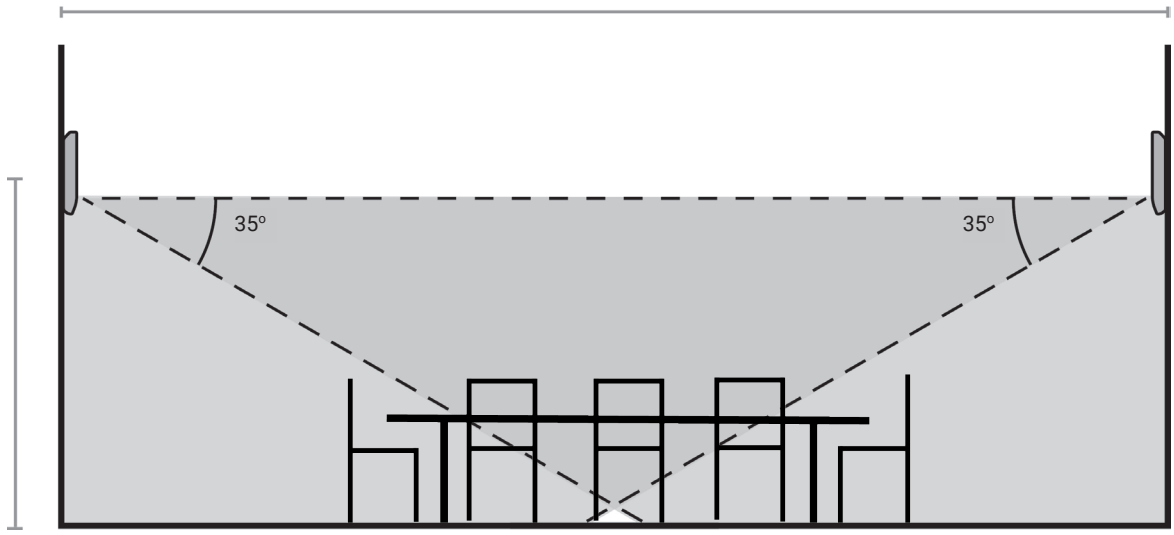

Height:
Between
2m – 3m

UbiCapture WA

Fig.14 Top view

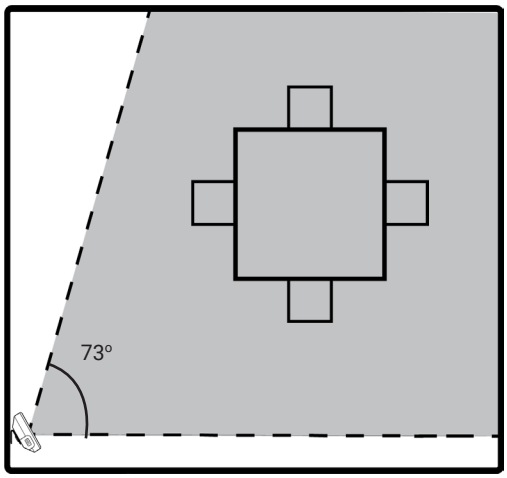

Fig.15 Side view

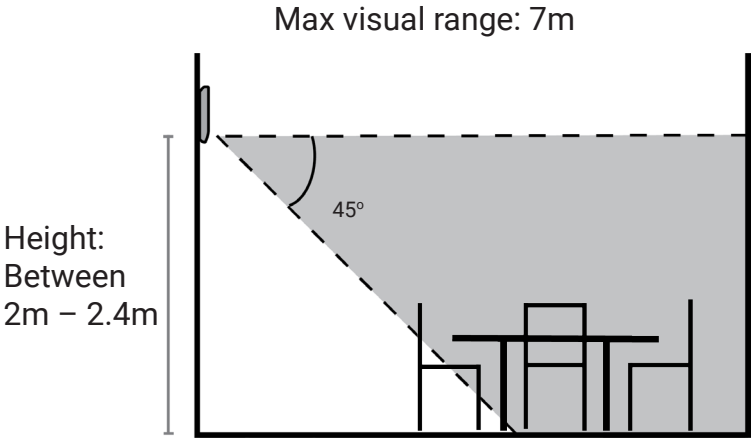

Fig.16 Footfall distance range

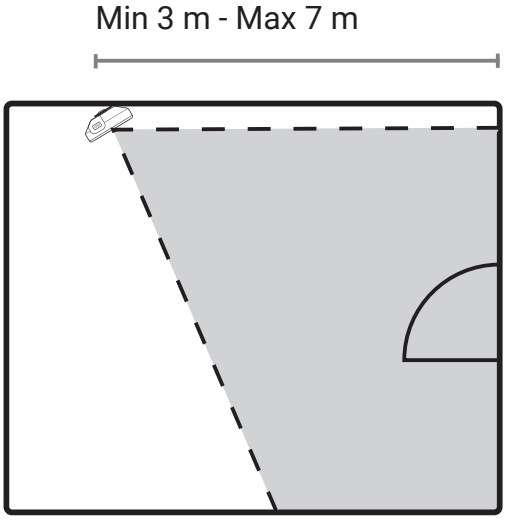

Blind zone

Fig.17 HD

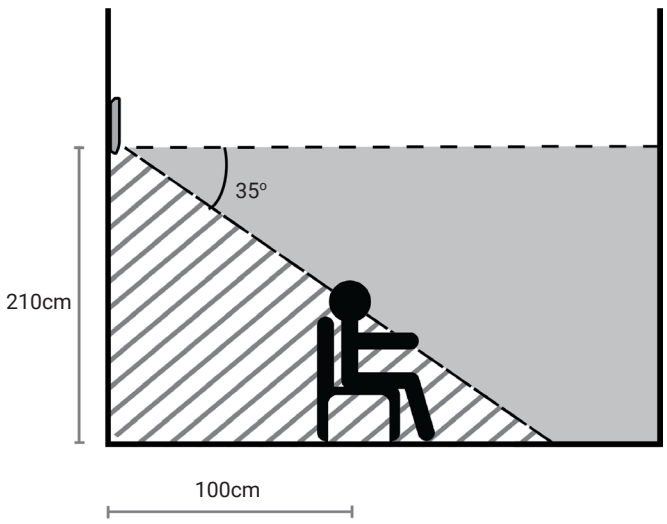

Fig.18 WA

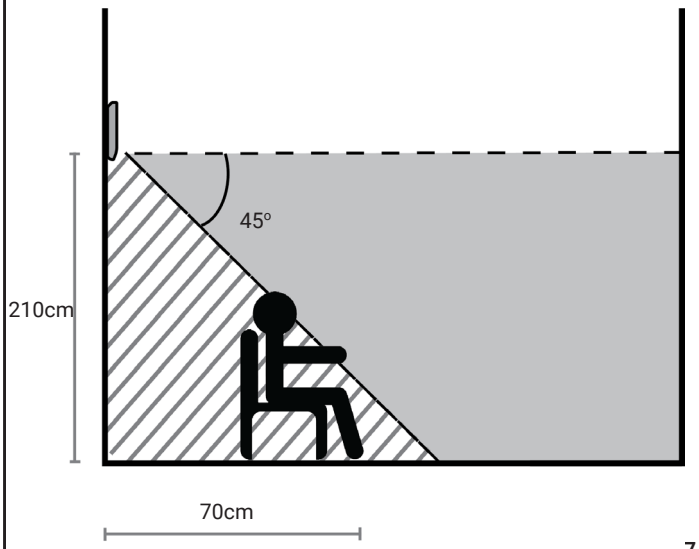

FCC Statement

1. This device complies with Part 15 of the FCC Rules. Operation is subject to the following two conditions:

(1) This device may not cause harmful interference.

(2) This device must accept any interference received, including interference that may cause undesired operation.

2. Changes or modifications not expressly approved by the party responsible for compliance could void the user's authority to operate the equipment.

NOTE:

This equipment has been tested and found to comply with the limits for a Class B digital device, pursuant to Part 15 of the FCC Rules. These limits are designed to provide reasonable protection against harmful interference in a residential installation.

This equipment generates uses and can radiate radio frequency energy and, if not installed and used in accordance with the instructions, may cause harmful interference to radio communications. However, there is no guarantee that interference will not occur in a particular installation. If this equipment does cause harmful interference to radio or television reception, which can be determined by turning the equipment off and on, the user is encouraged to try to correct the interference by one or more of the following measures:

Reorient or relocate the receiving antenna.

Increase the separation between the equipment and receiver.

Connect the equipment into an outlet on a circuit different from that to which the receiver is connected.

Consult the dealer or an experienced radio/TV technician for help.

CAUTION

3. The product shall only be connected to a USB interface of version USB2.0

4. Adapter shall be installed near the equipment and shall be easily accessible

5. Operation temperature:-20~25° C

6. The plug considered as disconnect device of adapter

7.The device complies with RF specifications when the device used at 20cm from your body

8. AC adapter:

Model No.: CW1201000RE

Input: AC100-240V, 50/60Hz 0.4A

Output: DC 12.0V, 1.0A

SHENZHEN XUANTONGWEI TECHNOLOGY CO., LTD. hereby declares that this Wireless Object Detector is in compliance with the essential requirements and other relevant provisions of Directive 2014/53/EU

This information has to be presented in such a way that the user can readily understand it. Typically, this will necessitate translation into every local language (required by national consumer laws) of the markets where the equipment is intended to be sold. Illustrations, pictograms and using international abbreviations for country names may help reduce the need for

translation.

Max power:

BT:9.28dBm

2.4G wifi: 16.74dBm

Tx Frequency:

Wi-Fi:

2412MHz~2472MHz

5180MHz~5240MHz

5725MHz~5875MHz

Bluetooth: 2402MHz~2480MHz Rx Frequency:

Wi-Fi:

2412MHz~2472MHz

5180MHz~5240MHz

5725MHz~5875MHz

Bluetooth: 2402MHz~2480MHz

BT and WIFI can be used in Europe without restriction.