ANGLE LEVER AND ROTATE ARM BUTTON CONTROL UNIT
USER MANUAL

The Angle Lever and Rotate Arm Button Control Unit installed in Tonal Trainer is an assembly that has the dual purpose of rotating the arms of the trainer as well as adjusting the angle of the arms, relative to the trainer columns attached on either side of the trainer unit.

The Angle Lever is used exclusively when the angle of the arms needs to be adjusted to any of its fixed-increment angles points. To adjust the angle of any of the arms, lift Angle Lever and continue to hold lever to lower or raise the arm through any of its discrete latching angle positions. Once a desired angle position is chosen, release the Angle Lever and slightly move the arm up or down until the column attachment swivel point latches down the arm.

The Rotate Arm button is used exclusively when the arm column needs to be rotated inwards or outwards along its axis. To adjust the rotational angle of any of the arms, press the Rotate Button and continue to hold the button to rotate the arm through any of its discrete latching angle positions. Once a desired rotational angle position is chosen, release the Rotate Button and slightly move the arm right or left until the column locks down in place.

The installation or removal of the Angle Lever and Rotate Arm Button Control Unit installed in Tonal Trainer requires professional installation. Do not attempt to install, uninstall, or relocate this assembly without the help of an approved Tonal Installer. If you require assistance installing, moving, or repositioning this product assembly, please contact Tonal Customer Care.

- FCC ID and IC ID Statements
    - *"This device complies with part 15 of the FCC Rules. Operation is subject to the following two conditions: (1) This device may not cause harmful interference, and (2) this device must accept any interference received, including interference that may cause undesired operation."*
    - "NOTE: This equipment has been tested and found to comply with the limits for a Class B digital device, pursuant to part 15 of the FCC Rules. These limits are designed to provide reasonable protection against harmful interference in a residential installation. This equipment generates, uses and can radiate radio frequency energy and, if not installed and used in accordance with the instructions, may cause harmful interference to radio communications. However, there is no guarantee that interference will not occur in a particular installation. If this equipment does cause harmful interference to radio or television reception, which can be determined by turning the equipment off and on, the user is encouraged to try to correct the interference by one or more of the following measures:
        - Reorient or relocate the receiving antenna.
        - Increase the separation between the equipment and receiver.
        - Connect the equipment into an outlet on a circuit different from that to which the receiver is connected.
        - Consult the dealer or an experienced radio/TV technician for help."

- **This device requires “professional installation” by qualified and technically trained personnel.**
- **Changes or modifications not expressly approved by the party responsible for compliance could void the user‘s authority to operate the equipment.**

  - This Class B digital apparatus complies with Canadian ICES-003.
    Operation is subject to the following two conditions: (1) this device may not cause harmful interference and (2) this device must accept any interference received, including interference that may cause undesired operation.
    CAN ICES-3(B)/NMB-3(B)
    This device contains licence-exempt transmitter(s)/receiver(s) that comply with Innovation, Science and Economic Development Canada’s licence-exempt RSS(s). Operation is subject to the following two conditions:
    (1) This device may not cause interference; and
    (2) This device must accept any interference, including interference that may cause undesired operation of the device.
    L’émetteur/récepteur exempt de licence contenu dans le présent appareil est conforme aux CNR d’Innovation, Sciences et Développement économique Canada applicables aux appareils radio exempts de licence. L’exploitation est autorisée aux deux conditions suivantes
    (1) l’appareil ne doit pas produire de brouillage;
    (2) l’utilisateur de l’appareil doit accepter tout brouillage radioélectrique subi, même si le brouillage est susceptible d’en compromettre le fonctionnement.

Unique Identifier: 500-0201
Responsible Party – Contact Information in the US
Tonal Systems, Inc.
617 Bryant St,
San Francisco, California, 94107
United States of America

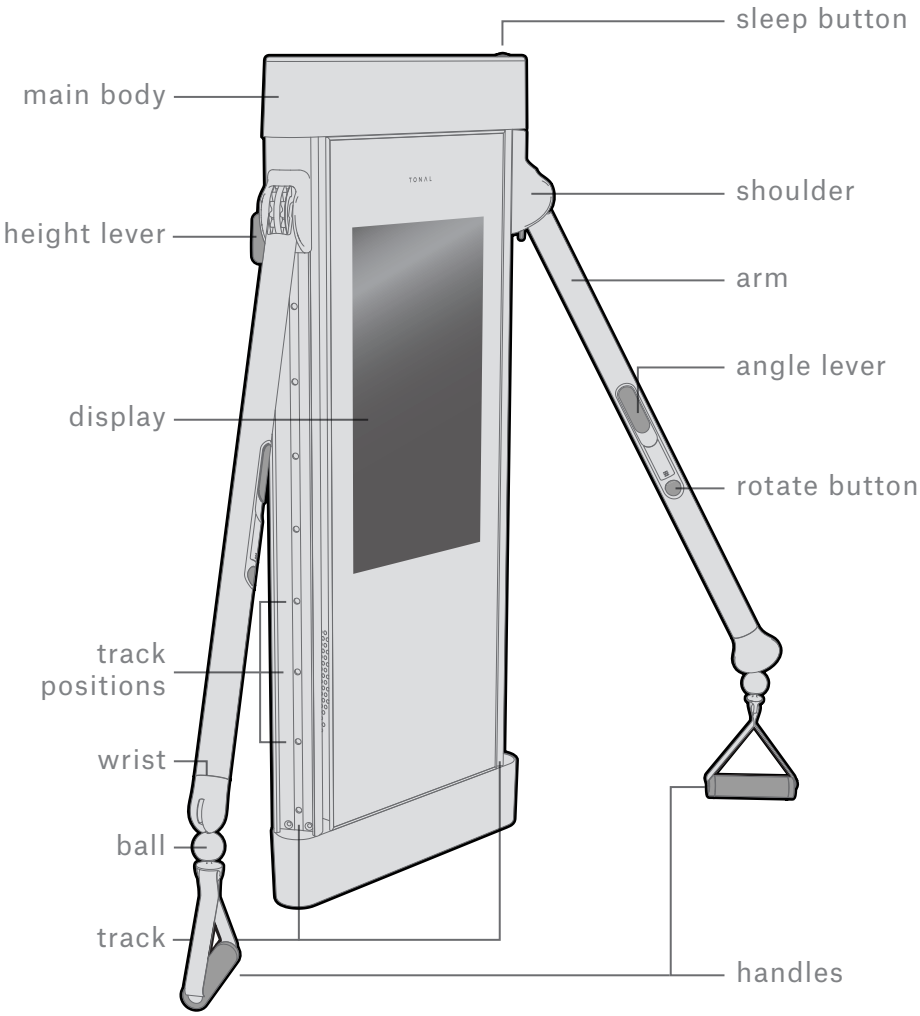
sleep button
main body
shoulder
height lever
arm
angle lever
display
rotate button
track
positions
wrist
ball
track
handles
TONAL

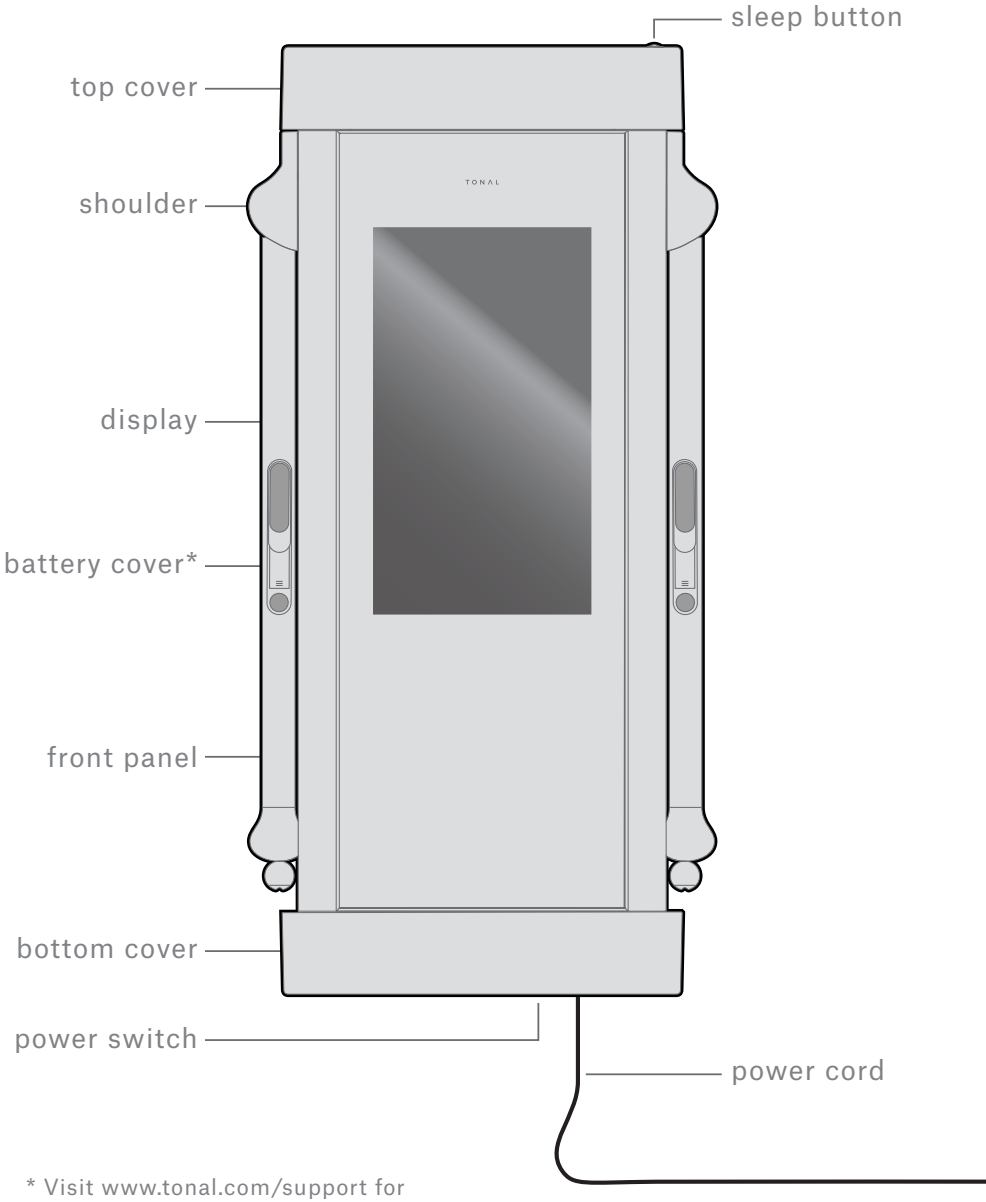

* Visit www.tonal.com/support for battery replacement instructions

UNSTOWING ARMS

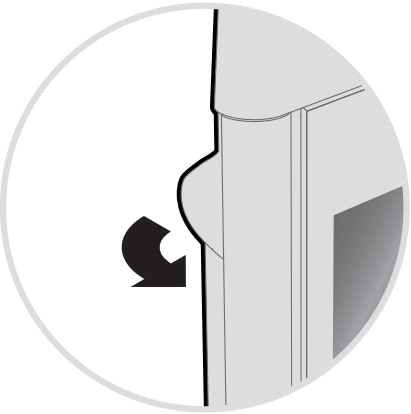

1. Turn shoulder away from wall

2. Lift arm out one click

3. Press the rotate button

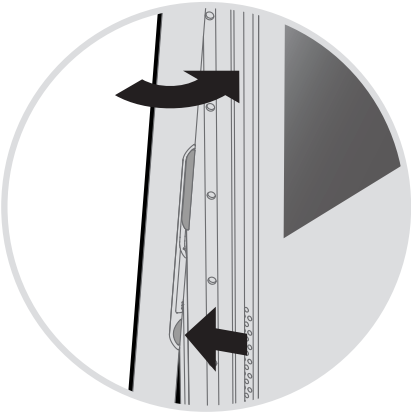

4. Continue holding the rotate button while moving the arm until you reach the desired position

STOWING ARMS

1. Start with the arm in the highest track position and locked in an angled position

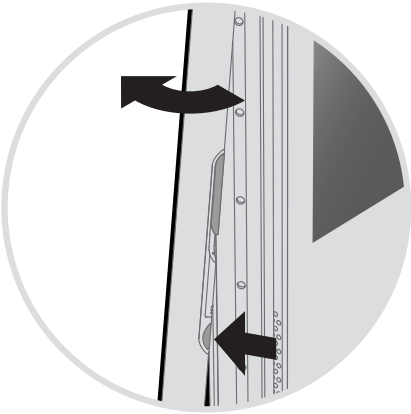

2. Press and hold the rotate button while moving the arm toward the wall

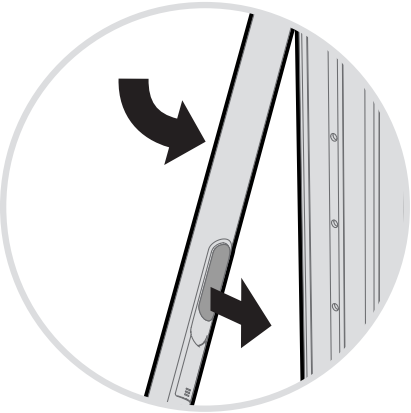

3. Lift angle lever and continue to hold lever to lower arm all the way down

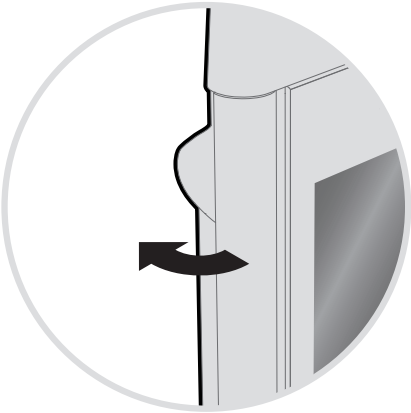

4. Turn shoulder toward the wall until fully stowed

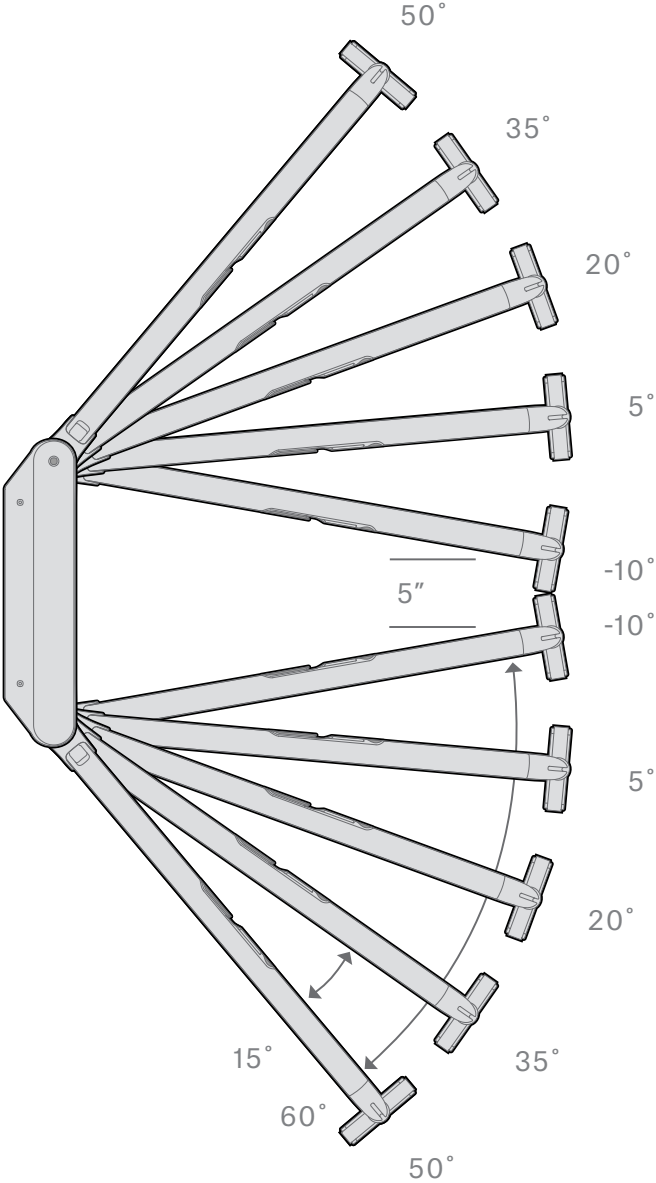
50˚
35˚
20˚
5˚
-10˚
5″
-10˚
5˚
20˚
35˚
15˚
60˚
50˚