EA-30X Agricultural Spraying Drone

User Manual v1.5

2022.7

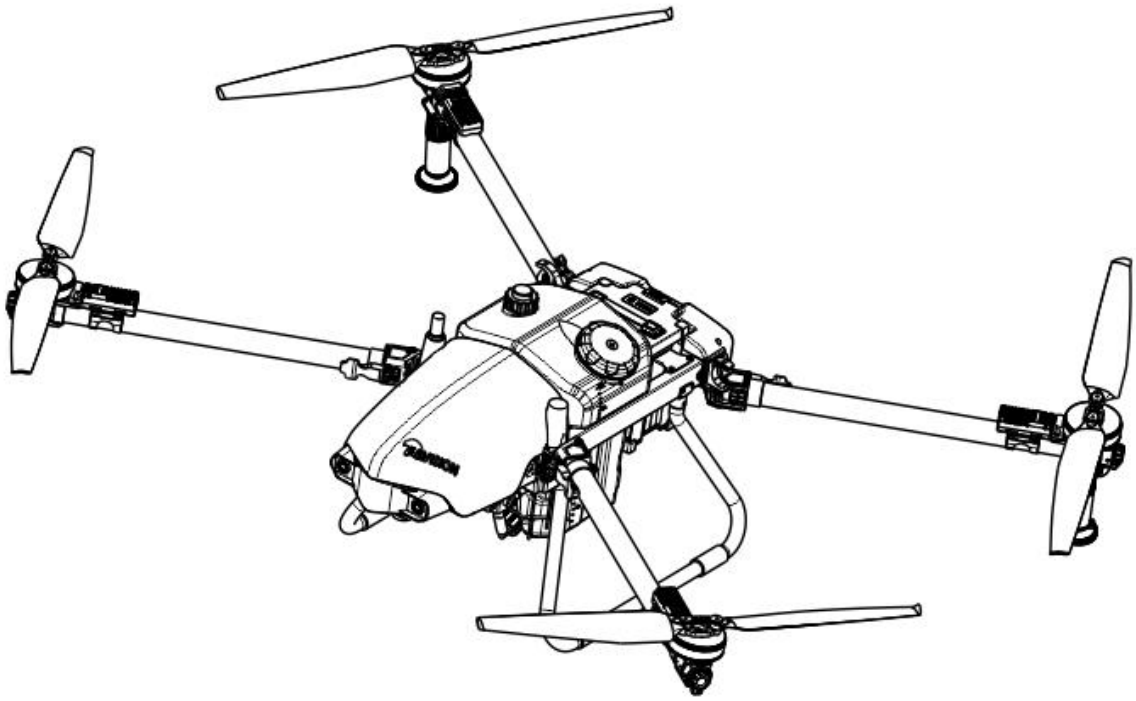

3WWDZ-30B

Intelligent Quadrotor Agricultural Spraying Drone

Suzhou EAVISION Robotic Technologies Co., Ltd.

To Users

Thank you for choosing EA-30X, the agricultural spraying drone developed and manufactured by EAVISION. To operate the product correctly and avoid damage or serious injury, please read and follow all the instructions in the user manual, and carry out maintenance in a timely and meticulous manner.

Navigate to a Topic

View a complete list of topics in the table of contents. Click on a topic to navigate to that section.

Contents

Disclaimers 1
Safety Notice 1
Rules for the use of pesticides 1
Operation 2
List of Items 3
Product Overview 4
Product description 4
Feature highlights 4
Drone 6
Drone overview 6
Drone components 6
Preparing the drone 7
Remote Controller 7
Remote controller overview 7
Remote controller components 8
Remote controller operation 9
Remote controller LEDs 11
Precautions for use 11
Smart Battery 12
Smart battery overview 12
Smart battery components 12
Battery function 12
Battery use 13
Battery storage & transport 15
Battery disposal 16
Precautions for use 16
Smart Charger 17
Smart charger overview 17
Smart charger components 17
Charge controller 18
Charger use 19
Firmware upgrade 20
Storage and maintenance 21
Precautions for use 21
Mapping Device 22
Mapping device overview 22

Mapping device components 22
Mapping device operation 22
Firmware upgrade 24
Precautions for use 24
Mobile Base Station 24
Mobile base station overview 24
Mobile base station components 25
Base station operation 25
Firmware upgrade 27
Precautions for use 27
App Introduction 27
Survey 27
Smart AG 28
Flight 28
Basic operation 28
Drone operation 29
Maintenance 33
Troubleshooting 34
List of dangers and hazards 37
Warranty Service 37
Table 2 List of Wearing Parts 40
Nozzle Warranty Special Instructions 41
Warranty Certificate 41
Specifications 42

Disclaimers

By using this product, you hereby acknowledge that you have read this declaimer and the user manual carefully and that you understand and agree to abide by the terms and conditions herein.

This product is not intended for use by persons under the age of 18. Adults should keep the drone out of reach of children and DOT NOT operate this drone in the presence of children. UAV operation license issued by EAVisionis required for users to operate the drone.

In no event will EAVisionbe liable to you for any indirect, incidental, special, consequential or punitive damages (including damages for loss of profits, goodwill, or any other intangible loss) arising out of or relating to your access to or use of, or your inability to access or use, the product, product accessories, or any materials, flight environment data, and whether or not EAVisionhas been informed of the possibility of damage.

This product is a multirotor flying platform intended for agricultural applications only. When you use our mobile apps or our products or other software, you will provide EAVision with data regarding the use and operation of the product, and operations record, and agree that the latter can legally collect, store, and use the data and record. EAVisionbears no responsibility for loss of data that results from your inability to use the product.

The excellent performance of this product relies on the original parts of EAVision. Do not use accessories that are not from EAVision.

Unmanned aerial vehicle (UAV) operators should abide by the regulations from self-regulatory organizations such as the International Civil Aviation Organization, the Federal Aviation Administration, and their local aviation authorities. Once you use this product, it is deemed that you have read the relevant regulations and documents, and EAVisionis not responsible for any relevant legal responsibilities arising from the use of this product in violation of laws and regulations.

This statement has important implications for the safe use of this product and your legal rights. Suzhou EAVision Robotic Technologies Co., Ltd. reserves the right to update this disclaimer. Thank you again for choosing EAVision.

Safety Notice

Rules for the use of pesticides

- Avoid the use of powder pesticides as much as possible as they may reduce the service life of the nozzle. Be sure to clean the nozzle carefully each time after spraying powder in case of nozzle blockage and damage.

- Pesticides are toxic and needed to be handled in strict accordance with their specifications.
- Residue on the equipment caused by splashes or spills when pouring and mixing the pesticide can irritate your skin. Make sure to clean the equipment after mixing.
- Use clean water to mix the pesticide and filter the mixed liquid before pouring into the spray tank to avoid blocking the strainer. Clear any blockage before using the equipment.
- Make sure to stay in an upwind area when spraying pesticide to avoid bodily harm.
- Wear protective clothing to prevent direct body contact with the pesticide. Rinse your hands and skin after handling pesticides. Clean the drone and remote controller after applying the pesticide.
- Effective use of pesticides depends on pesticide density, spray rate, spray distance, drone speed, wind speed, wind direction, temperature, and humidity. Consider all factors when using pesticides, but DO NOT compromise the safety of people, animals, or the environment in doing so.
- DO NOT contaminate rivers and sources of drinking water.

Operation

- Make sure that your operations do not violate any applicable laws or regulations, and that you have obtained all appropriate prior authorizations. Consult the relevant government agency or authority before flight to ensure you comply with all relevant laws and regulations.
- Make sure that the battery is firmly inserted into the drone and the arms are unfolded and arm locks are firmly tightened. Avoid flying over or near crowds or hazardous materials.
- Do not fly under the influence of alcohol or drugs or in poor physical or mental condition.
- Do not operate the drone alone outside the training area without sufficient training. Seek help from experienced users before and during flight.
- Stay away from the rotating propellers. And avoid any obstruction, interference or assault from humans, animals or objects during flight.
- Avoid flying near strong electromagnetic sources such as high voltage towers, large power equipment, radio and television transmission towers, and mobile phone base stations. EVASION assumes no liability for damage or injury incurred from operation in such areas.
- Make sure you comply with all relevant laws and regulations before flight. Factory settings for the drone: 20m of max altitude, 7m/s of max speed, and 1000m of max distance.

List of Items

Check that all of the following items are included in the package. If there is any missing item, please contact your dealer promptly.

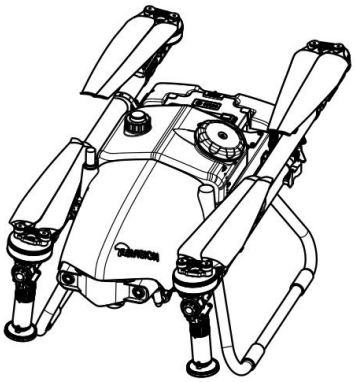

EA-30X drone×1

(Including spray tank and propeller holders)

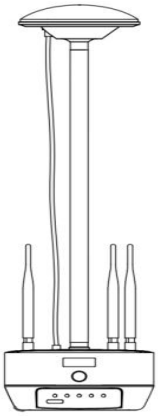

Base stationx1

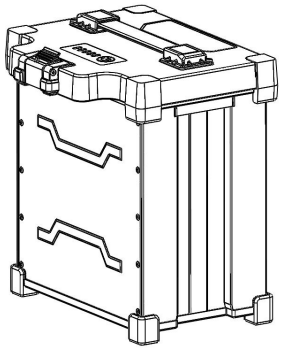

Smart Batteries×2

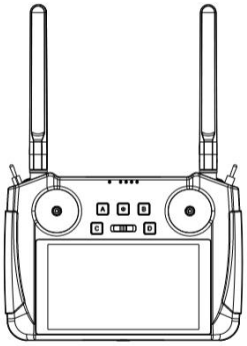

Remote Controller×1

(Including power adapter and power cord)

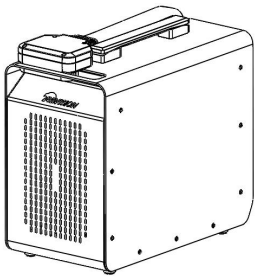

Smart Charger×1

Mapping Device×1

(In the tool box)

Tool box contains mapping device x 1, mapping device extension rod x 1, tapered head x 1, Type-C adapter x 1, Type-C data cable x 1, screwdriver set x 1

Product Overview

Product description

The new generation of the EA-30X is a professional agricultural drone for hilly and mountainous terrains and can be operated day and night. (Note: Some requirements must be met for the drone to operate at night. Please refer to the operation manual)

The drone comes equipped with the new-generation binocular vision system (EAVision4.0) with 120° of FOV, providing pixel level accuracy. Incorporated with technologies such as millimeter wave radar and LIDAR, users are able to plan the field and operate flight, no need to map in advance. The optimized rotor blades and electronic speed control algorithms allow drone to avoid obstacles in a timely manner. EA-30X is capable of high-speed and continuous precise obstacle avoidance even at slopes below 90°, making it efficient on all terrains.

The flight system is equipped with the EAVisionNight Lighting System (EANLS), with the brightness of 700LUX within 5 meters. It can accurately sense all-terrain obstacles at night, ensuring operational safety all day long.

The next- generation CCMS-L20000 mist nozzle produces droplets to penetrate crops with size ranging from 10 to 100 microns. Its spray rate reaches 10L/min thanks to the integrated spraying system. The new spot spraying system allows users to plan fields and locate, achieving precise and sufficient treatment of crops.

The global offline mode has been upgraded again, with a single base station covering an area of 333 hectares, which can easily cope with no network operation scenarios.

The EA-30X features a quadrilateral folding structure design for quick folding and easy storage with the folding size of only 0.5 cubic meters. And the smart battery makes it convenient to charge the drone since it is fully charged in 11 minutes and 2 batteries and 1 charger are provided. The image transmission distance reaches 1.5km with the help of the integrated FPV remote controller which controls boundary points adding and plot flight.

Feature highlights

- The updated binocular vision system (EAVision4.0) with 120° of FOV effectively senses the environment and helps to circumvent obstacles day and night.
- The optimized rotor blades and electronic speed control algorithms allow drone to avoid obstacles in less than 0.2s.
- The next- generation CCMS-L20000 mist nozzle produces droplets to penetrate crops with size ranging from 10 to 100 microns.
- The spray rate reaches 10L/min thanks to the integrated spraying system, and the tolerance is within

5% with ultrasonic flow meter.

- The image transmission distance reaches 1.5km with the help of the integrated FPV remote controller which controls boundary points adding and plot flight.
- The smart battery can be fully charged in 11 minutes, and 2 batteries and 1 charger are provided for easy use.
- The drone can fly as low as 0.7m from the canopy, shortening the droplet settling distance, significantly reducing evaporation and drift, enhancing the penetration of the liquid, and ensuring the effectiveness of agricultural protection for all types of crops.
- The flight system is equipped with the EAVisionNight Lighting System (EANLS), with the brightness of 700LUX within 5 meters. It can accurately sense all-terrain obstacles at night, ensuring operational safety all day long.
- In the case of RTK disconnection, the drone will maintain the original accuracy for 4 minutes, and wait for the signal to recover without stopping operation. Even if the signal cannot be recovered in time, it can complete the task and return to the take-off and landing point.
- The global offline mode has been upgraded again, with a single base station covering 333 hectares, which can easily cope with agricultural operations in areas without network.
- The new spot spraying system allows users to plan fields and locate, achieving precise and sufficient treatment of crops.
- It allows the user to select multiple take-off and landing spots, the Smart AG app performs intelligent route planning and take-off and landing spot recommendations based on the plot and the location of the take-off and landing spot, providing flight route planning with the best operating efficiency, and route replanning for route resuming to reduce flight time and improve efficiency by more than 30%.

Drone

Drone overview

The drone uses an industrial flight controller to provide multiple operation modes for various applications. The drone adopts binocular vision, millimeter-wave radar and lidar fusion, and no need to map in advance. Facing complex terrain with slopes below 90°, it can achieve high-speed, accurate and continuous obstacle avoidance. In addition, the drone also proves functions of intelligent route planning for multiple take-off and landing spots, intelligent spot spraying, points adding, etc.

Drone components

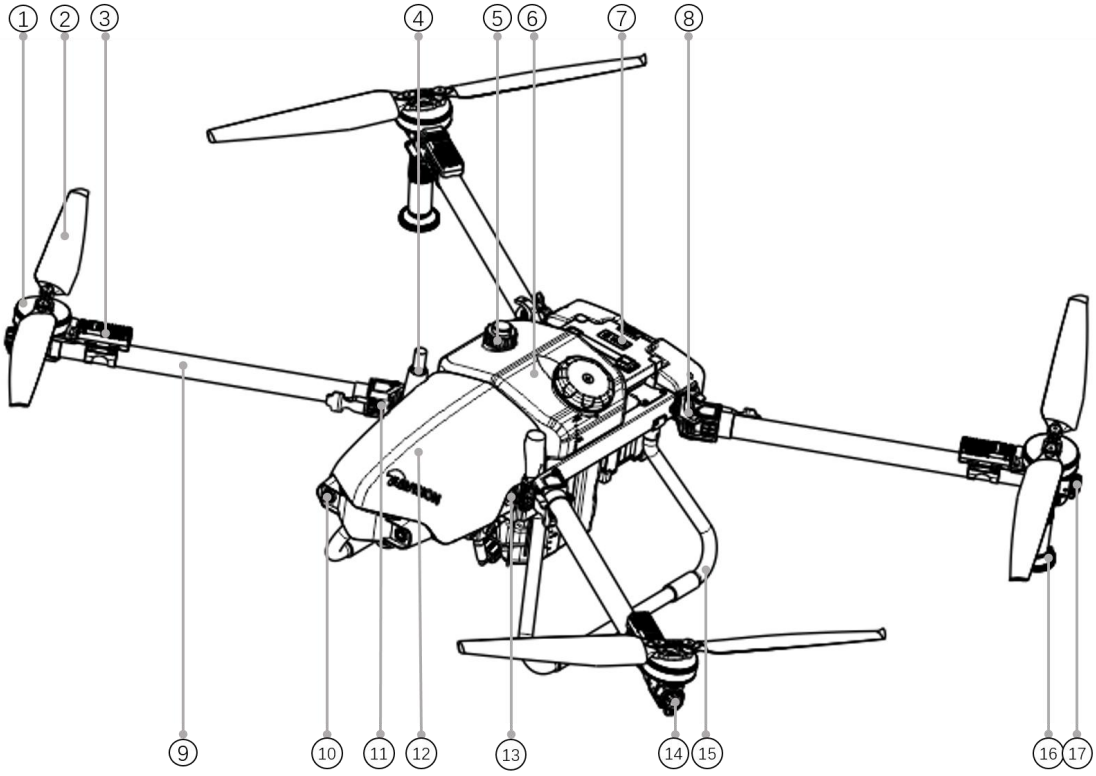

1. Motor
2. Propeller
3. Electronic Speed Control
4. RTK Antenna
5. Liquid Level Gauge
6. Spray Tank
7. Smart Battery
8. Arm Storage Clamp
9. Frame Arm
10. Binocular Lens
11. Arm Locks
12. Cover
13. Backup Power Switch
14. Front Navigation Light
15. Landing Gear
16. Nozzle
17. Rear Navigation Light
18. Lidar
19. Water Pump
20. FPV Camera
21. Hoses
22. Millimeter wave radar
23. Ultrasonic Radar
24. Ultrasonic flowmeter

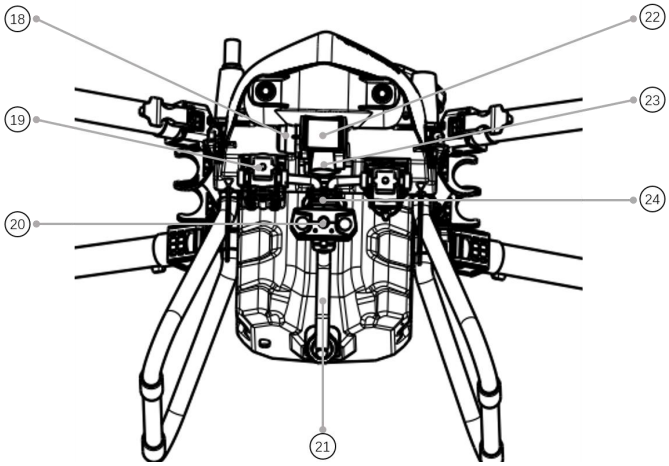

Preparing the drone

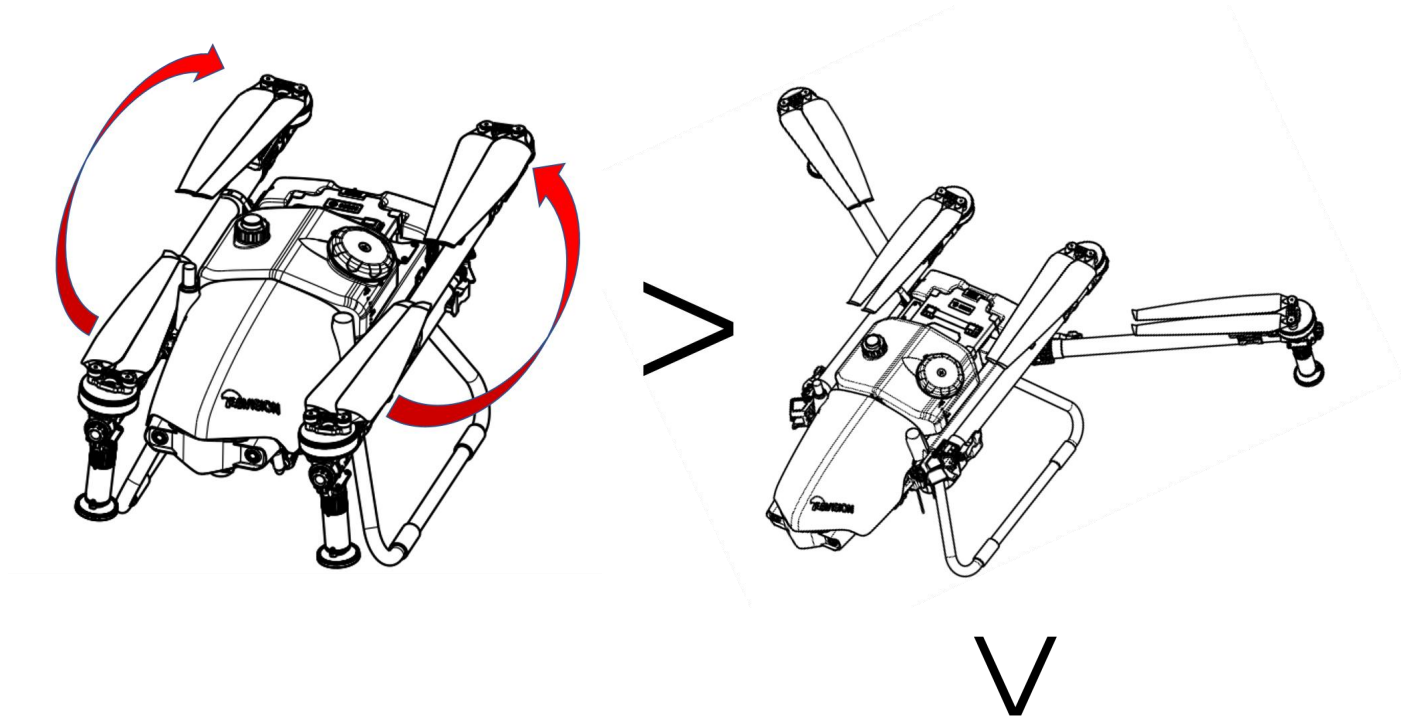

1. Unfold the M3 and M4 arms followed by M1 and M2 and fasten the four arm locks. Avoid pinching fingers.
2. Fold the M1 and M2 arms followed by the M3 and M4 and make sure that the arms are inserted into the storage clamps on both sides of the drone. Avoid pinching fingers.
3. Unfold the propeller blades.

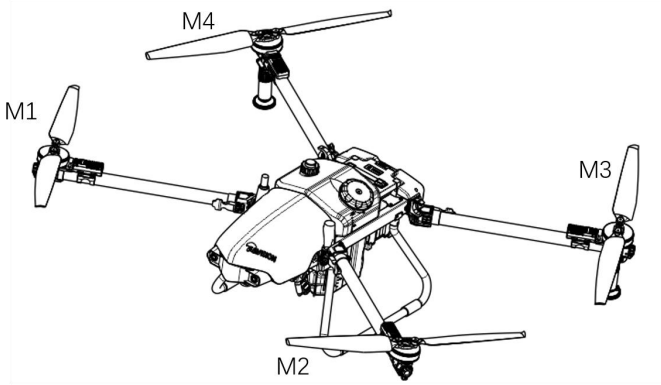

Remote Controller

Remote controller overview

The EAVisionremote controller adopts the advanced high-definition image transmission technology, and can automatically select the frequency band with the lowest interference. Equipped with an omnidirectional antenna, the image transmission and control distance can reach 1.2 to 1.8 kilometers. Its powerful computing performance reduces video transmission display delay to 180ms with Qualcomm eight-core CPU.

The remote controller uses a 5.5 inch 1920*1080 high-definition display with a maximum screen brightness of 1000cd/㎡, nearly twice that of a common smartphone, and is still clearly visible in direct sunlight.

Remote controller components

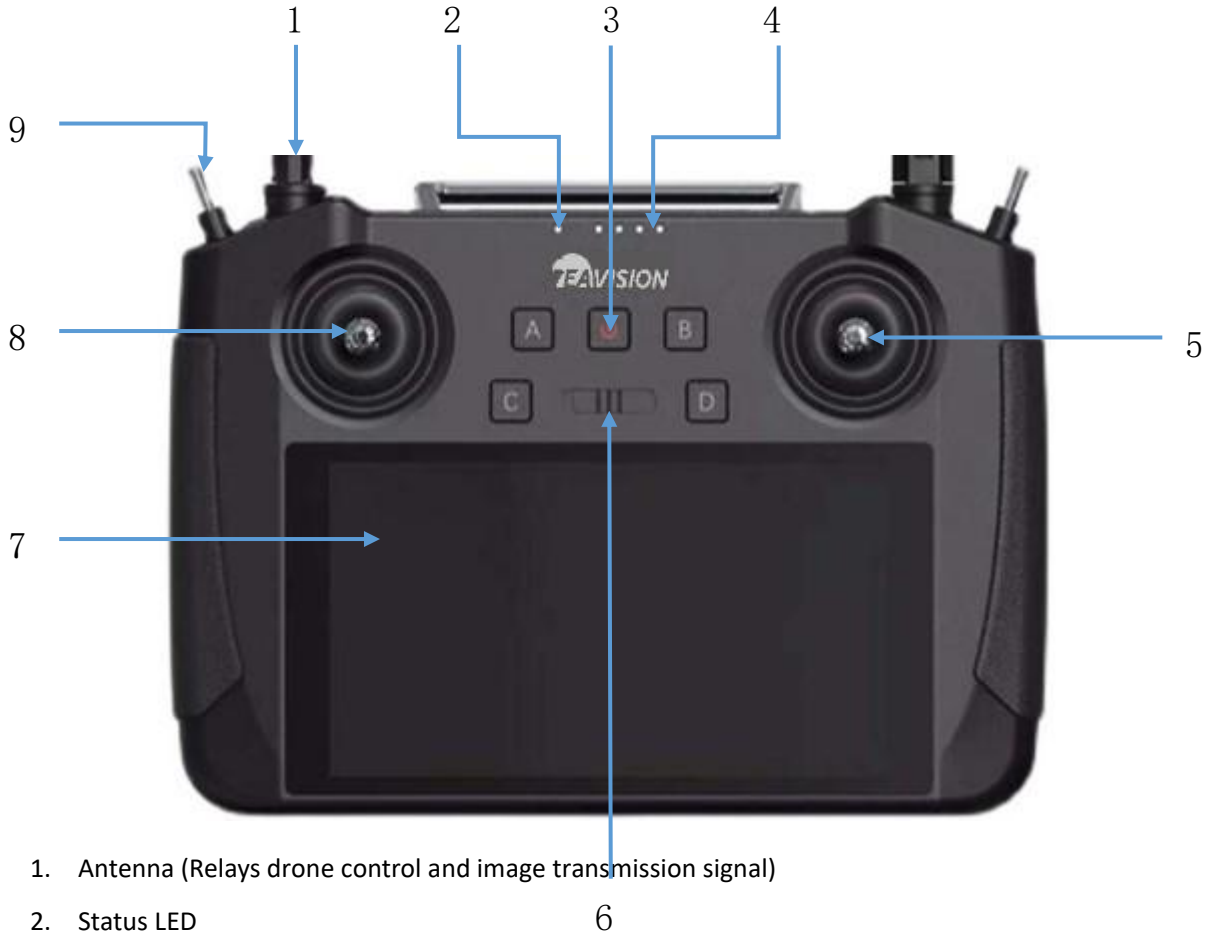

1. Antenna (Relays drone control and image transmission signal)
2. Status LED
3. Power button
4. Battery level LED
5. Right joystick (controls UAV movement)
6. Spray switch (in manual operation mode, switch to start or stop spraying)
7. Touch screen (Tap to select. Android-based device to run Smart AG Pro App)
8. Left joystick (controls UAV movement)
9. 3-Stage switch (auto mode/manual mode)

Remote controller top interface

Remote controller bottom interface

Remote controller operation

Turning on and off

1. When the remote controller is powered off, press the power button to check the battery level of the internal battery. Recharge before use if the battery level is low.
2. When the remote controller is powered off, press the power button to lighten the battery level LED, then press and hold to power on the remote controller. Wait till all LEDs to light up in sequence.
3. When the remote controller is powered on, press and hold the power button for about 2 seconds until the shutdown button pops up. Tap it to turn off the remote controller.

- Screenshot: when the remote controller is powered on, press and hold the power button for about 2 seconds until the screenshot button pops up. Tap it to screenshot.
- Standby: when the remote controller is turned on, press the power button to switch to the energy-saving mode.
- It takes about 90 seconds to power on the remote controller for the first time. And it takes about 30 to 35 seconds to change battery during operation (with backup battery).

Charging

Charge the battery with the AC power adapter when the remote controller is powered off.

1. Use Type-C fast charging cable to connect the remote controller and adaptor.
2. The Status LED turns solid red when charging.
3. The Status LED turns solid green when fully charged.

- The remote controller cannot be charged with the 5V adaptor, please use the original charger.
- Make sure the remote controller is powered off when charging, otherwise, it will be overheating.

Operating the drone

You can set the joystick under System Settings of Siyi Remote Controller.

This section explains how to control the orientation of the drone through the remote controller. Control can be set to Mode 1 (American standard), Mode 2 (Japanese standard), or Mode 3 (Chinese standard). Below refers to Mode 1 (American standard).

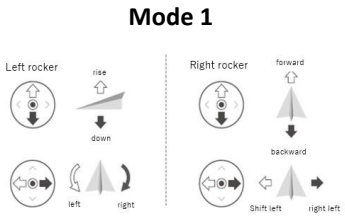

Linking the Remote Controller

1. Enter the System menu in Siyi Remote Controller app, go to System Settings, and tap Start Linking.

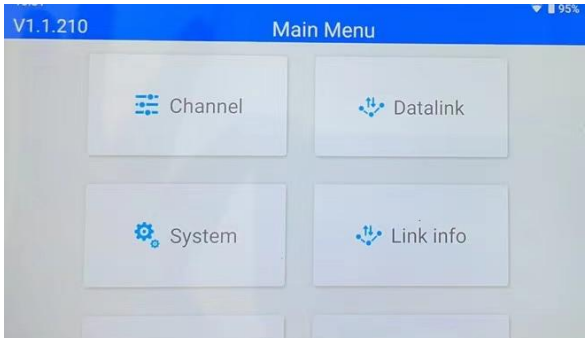

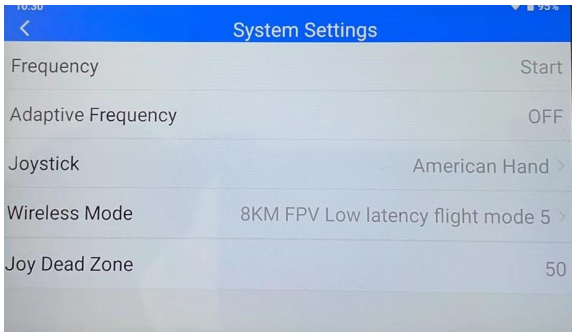

2. The Status LED on the remote controller blinks red, indicating that the linking is in progress.
3. Press the linking button in the receiver for 2 seconds until the status LED blinks red.
4. Wait for 5 to 10 seconds for linking, and the status LEDs of the remote controller and receiver will turn solid green.

Operation Control

- Flight mode switch: push the dial in the upper left corner of the remote controller to the top for auto flight, and to the bottom for manual flight.
- Spray button: in manual operation mode, push the dial to the left to stop spraying and the opposite direction to start spraying.
- FPV: turn on SIYI FPV on the remote controller to display the FPV view.

Remote controller LEDs

The status LED indicates different meanings with three colors of light flashing and different flashing frequencies.

Status LED	Description
Red light flashing quickly	Linking
Alternating red-green-yellow flashing slowly	Picture transmission starting up
Alternating red-green-red-green-red flashing	Unexpected shutdown of Android system
Red light flashing slowly	Firmware mismatch
Red light flashing three times	Image transmission initialization failed
Red light flashing four times	Joysticks need to be calibrated
Yellow light flashing slowly	The remote controller power supply voltage is abnormal
Yellow light flashing twice	Remote controller Bluetooth not connected
Solid red light	No transmission with the receiver
Alternating yellow-red flashing Alternating yellow-red-red flashing Alternating yellow-red-red-red flashing	Remote controller temperature first-level alarm Remote controller temperature second-level alarm Remote controller temperature third-level alarm
Alternating green-red flashing Alternating green-red-red flashing Alternating green-red-red-red flashing	Receiver temperature first-level alarm Receiver temperature second-level alarm Receiver temperature third-level alarm
Flashing green light	The faster the flashing frequency, the worse the signal strength

Precautions for use

1. Do not use the remote controller to control the drone near crowds, obstacles, strong electromagnetic source, or other areas that are likely to cause unnecessary economic losses or even personal injury.
2. When operating, do not cover the remote controller antenna or block signal transmission in other ways.
3. During operation, keep a visual line of sight between the mid-section of the remote controller antenna and the drone, and the shade of green plants will seriously affect the remote controller signal distance.
4. The top of the remote controller antenna is the part with the weakest signal transmission. When operating, avoid pointing it to your drone.
5. Do not cut off the power of the remote controller when the drone motor is still running.
6. Always check the battery level of the remote controller before operation.

Smart Battery

Smart battery overview

EA-30X intelligent flight battery adopts a new high-energy density battery cell and an advanced battery management system to provide sufficient power for the drone. Metal casing and silicone protective cover effectively protect the battery. The battery capacity is 29000mAh and the nominal voltage is 51.8V.

Smart battery components

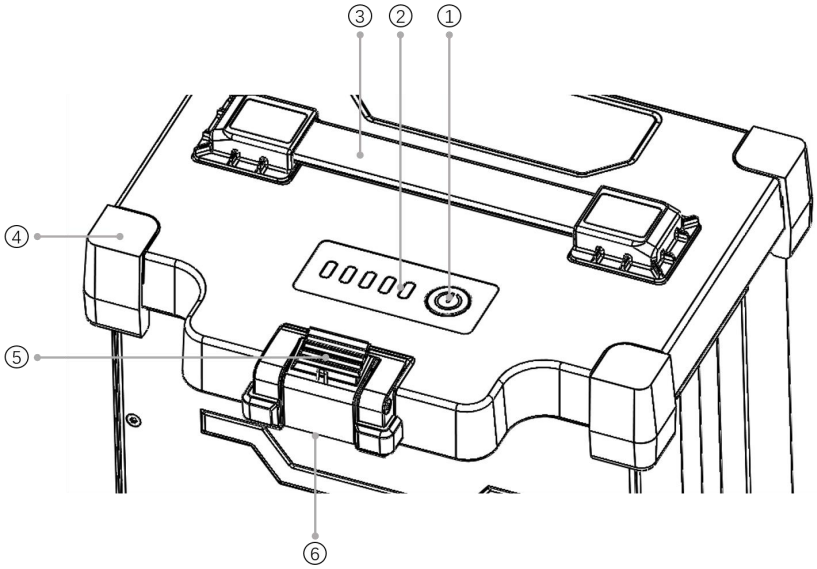

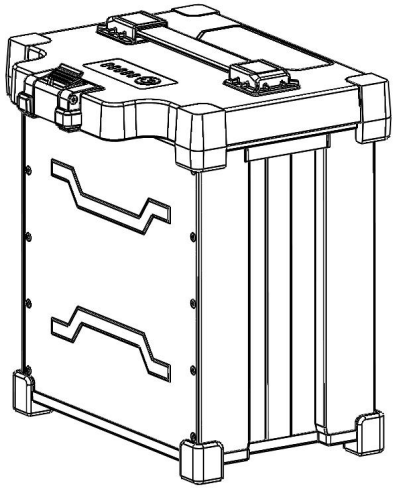

1. Power Button
2. LED Indicator
From left to right are power LED1, LED2, LED3, LED4, fault light
3. Handle
4. Silicone Protective Cover
5. Clamp
6. Power Interface

Battery function

JM2-29000mAh Smart Flight Battery has the following functions:

1. Battery level display: press the battery power button to check the current battery level.
2. Intelligent transmission: the battery information, such as voltage, battery level can be obtained in real time through the intelligent charging app to ensure that the drone can work properly.
3. Abnormal use record: the management system can record information such as high and low temperature charging and discharging, charging overcurrent, discharging overcurrent, long-time high-power storage, etc.
4. Charging warning prompt: if an error occurs during charging, restart the battery and charger. If the problem is not solved, restart the battery according to the App display and try again.

5. Automatic balancing function: under certain conditions, the battery will automatically turn on the balancing function to ensure the dynamic balance of the cells in the battery.
6. Automatic discharging function: the battery has a self-discharge function, and it will automatically discharge 40% of the power when left in a fully charged state for more than ten days.
7. Automatic adjustment of current and segmental protection function: when charging with an official charger, the charging current can be intelligently adjusted according to the current cell temperature. Also, the battery protects itself based on its temperature.
8. Thermal balance management function: the battery has a thermal balance management function, which controls the temperature difference between the cells within the error range and makes them equal.

Battery use

Turning on and off

1. In sleep mode or shutdown mode, press and hold the power button (T > 3 seconds) until all LEDs flash, then press the power button to turn on the battery.
   1) The battery will be kept off if there is no operation during LEDs flashing.
   2) The battery will be kept off if either operation is performed.
2. In the power-on mode, press and hold the power button (T > 3 seconds) until all LEDs flash, then press the power button to turn off the battery.
   1) The battery will be kept on if there is no operation during LEDs flashing.
   2) The battery will be kept on if either operation is performed.

When the battery is correctly inserted into the drone, press and hold the power button until all LEDs flash, then press the power button to turn on the battery. After flight, press and hold the power button until all LEDs flash, then press the power button to turn off the battery, and then disconnect the battery from the drone.

- Make sure the battery is fully charged before each flight.
- If the drone enters the low battery alarm mode, land and stop flying as soon as possible, and replace the battery
- In a low temperature environment, it is recommended to preheat the battery to above 5°C before flight, preferably to 20°C.

Checking battery level

1. In sleep mode or shutdown mode, press the power button (0.1 second < T < 1 second), the LED will display the power for 5 seconds. The battery LEDs are shown in the table below.

LED1 (Green)	LED2 (Green)	LED3 (Green)	LED4 (Green)	LED5 (Red)	Current Battery Level
On	On	On	On	Off	90%--100%
On	On	On	Flash quickly	Off	80%--90%
On	On	On	Off	Off	70%--80%
On	On	Flash quickly	Off	Off	60%--70%
On	On	Off	Off	Off	50%--60%
On	Flash quickly	Off	Off	Off	40%--50%
On	Off	Off	Off	Off	20%--40%
Flash quickly	Off	Off	Off	Off	0%--20%

The flashing frequency is 2Hz, on for 0.25 seconds and off for 0.25 seconds.

2. When charging battery, the battery level indication is shown in the table below.

LED1 (Green)	LED2 (Green)	LED3 (Green)	LED4 (Green)	LED5 (Red)	Current Battery Level
On	On	On	On	Off	99%--100%
On	On	On	Flash slowly	Off	90%--98%
On	On	On	Flash quickly	Off	80%--90%
On	On	Flash slowly	Off	Off	70%--80%
On	On	Flash quickly	Off	Off	60%--70%
On	Flash slowly	Off	Off	Off	50%--60%
On	Flash quickly	Off	Off	Off	40%--50%
Flash slowly	Off	Off	Off	Off	20%--40%
Flash quickly	Off	Off	Off	Off	0%--20%

1. The fast-flashing frequency is 2Hz, on for 0.25 seconds and off for 0.25 seconds. And the slow-flashing frequency is 0.5Hz, on for 1.2 seconds and off for 0.8 seconds.

2. When charging battery, the LED will flash to indicate the charging status. After charging, please disconnect the battery from the charging device.

Warning prompt

The battery status LED can display information about battery protection triggered by abnormal charging. After troubleshooting, please press the battery switch to cancel the LED protection prompt, and re-plug in the charging device to resume charging. If the charging temperature is abnormal, wait for it to return to normal, and the battery will automatically resume charging without re-plugging in the charging device.

LED1	LED2	LED3	LED4	LED5 (Fault Indicator)	Description
Off	Off	Flash quickly	Off	Flash quickly	Charging overcurrent / Discharging overcurrent
Off	Off	Flash quickly	Flash quickly	Flash quickly	Short circuit protection
Flash quickly	Off	Off	Flash quickly	Flash quickly	Charging at low temperatures / Discharging at low temperatures
Flash quickly	Off	Off	Off	Flash quickly	Charging at high temperatures / Charging at high temperatures
Flash quickly	Flash quickly	Flash quickly	Flash quickly	Off	Battery upgrading
Off	Off	Off	Off	Flash quickly	Incompatible charger / Charger abnormality

Battery storage & transport

1. After each flight, disconnect the drone from the battery, check the battery power interface and clean up the debris.
2. Make sure the battery is powered off and disconnected from the drone or other device before transportation.
3. Keep batteries out of the reach of children. If a child accidentally swallows a part, seek immediate medical attention.
4. Do not place batteries near heat sources, in direct sunlight or in a car on a hot day.
5. Store the batteries in a dry environment. Do not place the battery in water or in a place where water may leak.
6. Do not store or transport batteries together with metal objects (such as glasses, watches, metal

necklaces, hairpins, etc.), inflammable or explosive materials.

7. Put the battery on flat ground to avoid damage to the battery from sharp objects.
8. Do not store the battery for a long time after being completely discharged in case of over-discharging.
9. For long-term storage, please disconnect the battery from the drone.

Battery disposal

- Soak the battery in water for over 24 hours to ensure that the battery has been completely discharged before putting in the designated battery recycling bin. Batteries are hazardous chemicals and should not be put in other trash bins. For details, please follow local laws and regulations on battery recycling and disposal.
- If the battery cannot be completely discharged due to the failure of the power switch, contact a professional battery recycling company for further processing instead of putting the battery directly into the battery recycling bin.

Precautions for use

1. Do not use the battery near a heat source, such as in direct sunlight or in a car on a hot day
2. Keep the battery away from any liquid. Do not immerse the battery in water or get it wet. Never use the battery in the rain or in a wet environment. When the interior of the battery meets water, a decomposition reaction may occur, causing the battery to spontaneously ignite or even explode.
3. Batteries with bulging, leaking or damaged packaging are strictly prohibited. If the above situation occurs, please contact local dealer for further processing.
4. Keep the battery off before mounting or removing the battery from the drone. Do not remove or insert the battery while the battery is turned on, otherwise the power connector may be damaged.
5. The battery should be used between -5°C and 65°C. High temperature may cause the battery to catch fire or even explode. If the temperature is too low, the battery performance will be seriously degraded and cannot be used. Use the battery when it returns to normal temperature.
6. Do not use the battery in a strong electromagnetic environment. Otherwise, the battery protection board may be abnormal, resulting in serious failure of the drone.
7. Do not disassemble or puncture the battery with sharp objects in any way, otherwise it will cause the battery to catch fire or even explode.
8. Stay away from the battery leakage as it’s highly corrosive. If the internal liquid splashes on human skin or eyes, please rinse it off with clean water and seek medical attention immediately.
9. Do not use the battery again after it is dropped from the drone or hit by external force.
10. If the battery accidentally falls into the water during flight or under other circumstances, please remove the battery immediately and place it in a safe open area, and keep away from the battery until it is completely dry. Dried batteries should not be used again and should be disposed of properly according to the disposal methods in the user manual.

11. Do not use wires or other metal objects to cause battery short circuit.
12. Do not hit the battery or place heavy objects on the battery or charging device.
13. If the battery interface is dirty, wipe it with a dry cloth, otherwise it will cause poor contact, resulting in energy loss or charge failure.
14. Do not reversely connect the positive and negative poles of the battery, otherwise abnormal charging of the battery may cause overheating, explosion, or fire. Do not use generic batteries, and please contact the consumer service or designated dealers for replacement. Users are solely responsible for battery error and flight failure resulting from their use of generic batteries.
15. Batteries are dangerous goods. Do not stack other items on the battery, or sit on the battery or the package containing the battery, otherwise the battery may be damaged or even become dangerous.
16. The battery is heavy, please place it carefully to avoid tipping over and damaging the side of the battery. If the battery is toppled and damaged, immediately place the battery in an open area away from combustibles and crowds. Half an hour later, soak the battery in water for more than 24 hours. Make sure the battery is completely depleted before disposal.

Smart Charger

Smart charger overview

The JM2-29000mAh smart battery can be fully charged in 11 minutes with the JM-C3-7000 smart charger. With two batteries and one charger, users can charge one battery while operating with another, making it extremely efficient. The maximum charging power of the charger can reach 7000W. After connecting to the charging management App through Bluetooth, users can monitor the status of the charger and battery cells in real time. The intelligent charging management system can adjust the charging current according to the battery status, and the charger has multiple intelligent protection functions to avoid damage from over-temperature, over-voltage, under-voltage, short circuit and ensure charging safety.

Smart charger components

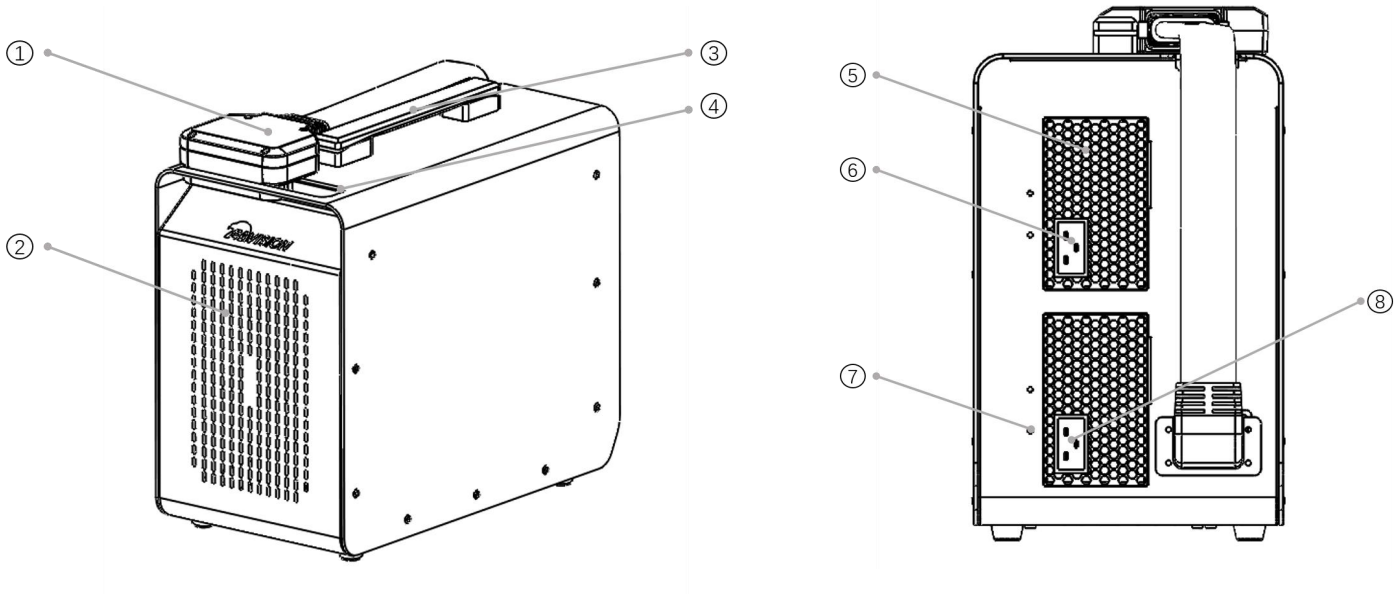

1. Charge Controller
2. Front Panel Heat Sinks
3. Handle
4. Charge Controller Clamp
5. AC Power Dustproof Screen
6. Power Input Interface
7. Ground Interface
8. Power Input Interface

Charge controller

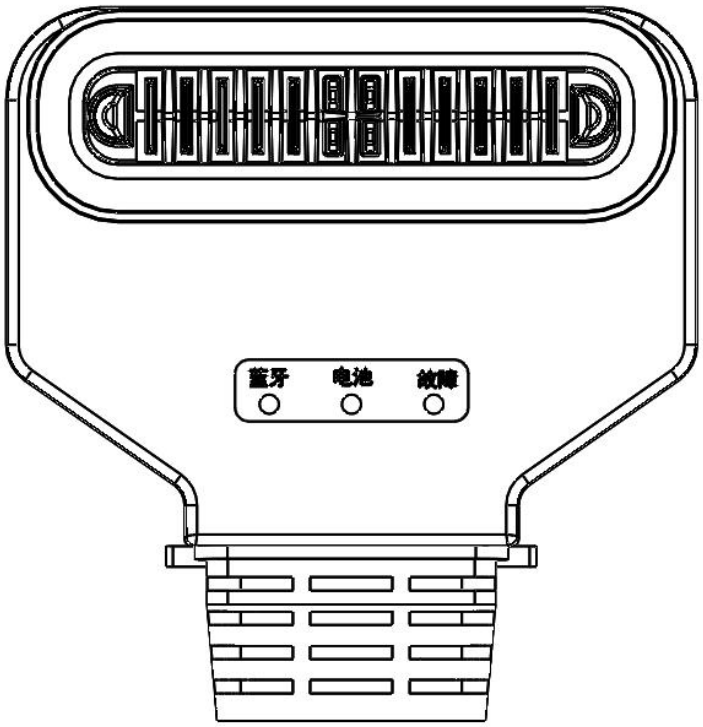

Battery charge status LED

LEDs indicate the charging status of the inserted channel battery

1. The solid yellow indicates that charging has not started.
2. The blink green indicates that charging is in progress.
3. Solid green indicates a full charge.

Bluetooth LED

LED indicates Bluetooth connection status

1. Blink green indicates that the app is to be connected.
2. Solid green indicates that the charger is connected to the App.

Fault LED

LED indicates errors

Blink red indicates a charger or battery alarm.

When the warning light turns red, stop charging immediately and check the App alarm information. Resume charging only after the red light goes out.

Charger use

Checklist before use

- **Appearance check**

  1. Make sure that the charging controller and power input cables are not broken.
  2. Make sure that the charging controller pins are not misshapen.
  3. Make sure that the generator supply cable and socket are not cracked, chipped, misshapen, or blocked.

- **Power-on check**

  1. Make sure that the fan runs normally after connecting to the power supply.
  2. Check whether the fault LED of the charging controller is off which indicates that the charger self-check is normal.
  3. Turn on the Bluetooth of the mobile phone, open the charging management app, find the corresponding charger ID and connect it, and check the status of the charger.

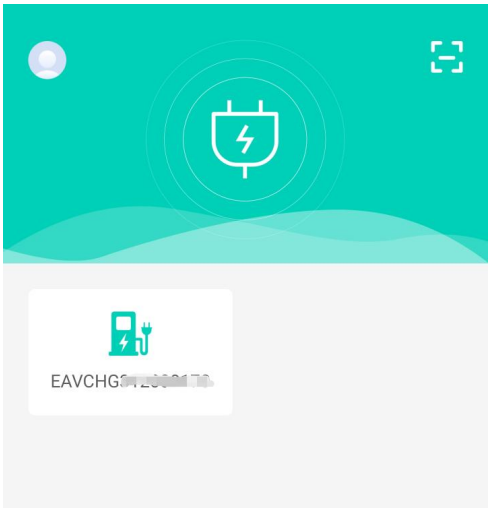

Use

1. The charger must be well grounded when in use. Please use a grounding wire to ground the shell of the charger. Remove the screw of the grounding interface and fix the grounding wire, as shown in the figure below.

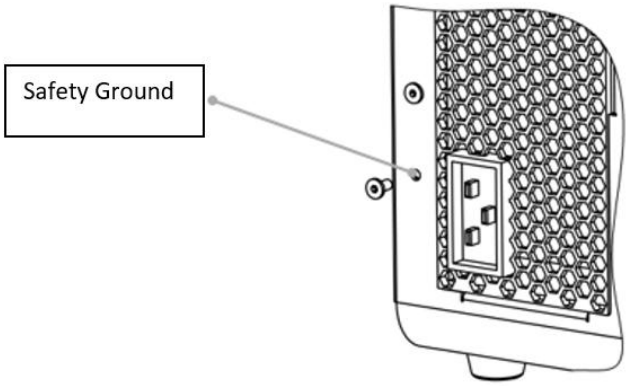

2. Connecting the charger to household electricity or a generator.
3. Insert the charging cable connector into the battery to start charging.

   The AC end of the charger is equipped with two power input sockets.

   1) In a home environment, make sure that the socket and wiring power support 7000W. It is recommended to use a single plug. The charger will automatically determine and charge with a low power of 3000W to avoid the danger of overloading the home grid due to excessive current. Charging time is about 30 minutes.
   2) For generators of 9000 watts or more, the charger will charge the battery with the power of 7000 watts when plugged into the input power socket. Charging time is about 11 minutes.

⚠
- The charger interface can be connected to two household circuits at the same time, one household circuit and one generator, or two generators. When the two sockets are used at the same time, the charging power is superimposed, and make sure the power of the wires and sockets of household circuits are greater than 7000W.
- Before connecting the charger, make sure various ports and input harnesses of the charger are not cracked, chipped, blocked, or misshapen.
- Before charging, make sure the battery is not cracked, chipped, or misshapen, and the port is not blocked.

---

4. When charging is completed, unplug the charging controller from the battery before unplugging the power supply cable.

Firmware upgrade

1. Make sure no batteries are plugged into the charger.
2. Turn on Bluetooth and connect the app. Tap Upgrade.

3. After the upgrade is completed, unplug the power cord and restart the charger.

- Do not insert the battery into the charger during the charging upgrade process.
- Do not cut off the power of the charger during the upgrade process, and keep the distance between the device and the charger.
- Please try again if the upgrade fails during the upgrade process.

Storage and maintenance

1. When charging is completed or the charger is not in use, please disconnect the battery charging cable from the charger, disconnect the power cable, and fix the battery charging cable and the controller to a fixed position.
2. The charger can be carried by handle and the charging cable should be secured before handling.
3. Please keep the charger away from direct sunlight, rain or humidity when storing it for a long time.
4. The charger should be stored away from heat sources, high pressure, water, flammable gases, corrosives and other dangerous items.
5. Please clean the charger heat sinks regularly to ensure effective charging.

Precautions for use

1. The AC power input port and generator plug are with high voltage, and it is strictly forbidden to touch them with hands.
2. The charger is a product with high current, and must be connected to the ground wire to ensure reliable grounding before using.
3. It is strictly forbidden to use this product in thunder and thunderstorm weather.
4. Make sure there are people nearby while charging. And keep the distance between battery and battery, battery and charger greater than 30cm to ensure safe charging.
5. When using this product, please keep away from heat source, high pressure, water and flammable, explosive and corrosive dangerous goods.
6. The product must be placed on a horizontal surface, and be 50cm or more away from walls, heat sources and window-type air inlets to ensure good ventilation when the product is working.
7. In the case of fire, please correctly use the dry powder extinguisher to extinguish the fire, using a liquid extinguisher may result in electric shock.
8. It is forbidden to charge any unofficial EAVisionbattery. Do not unplug the power cord during charging. After charging is completed, please unplug the battery in time.
9. It is forbidden to plug and unplug the battery with power on, otherwise it will cause the charging malfunction. When the status LED on the charging controller grows solid yellow, wait for about 10 minutes for charging resumption. Turn off the battery manually before plugging or unplugging the battery.

Mapping Device

Mapping device overview

EAVisionmapping device is a product developed for high-precision mapping. It supports centimeter-level field positioning in real time, helping users to achieve high-precision boundaries, regional mapping and obstacle sensing of operating plots, ensuring the accurate operation of drones.

The global offline version of the mapping device also functions as a relay route to form an offline network.

Mapping device components

The mapping device below is the global offline version.

Offline Mapping Device

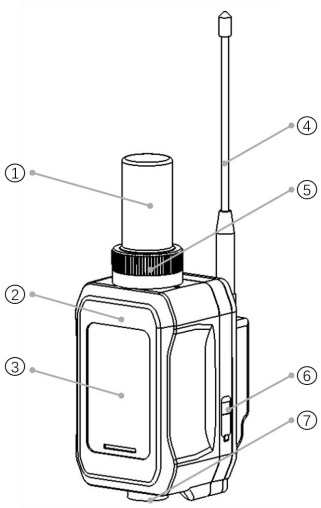

Mapping Device UI

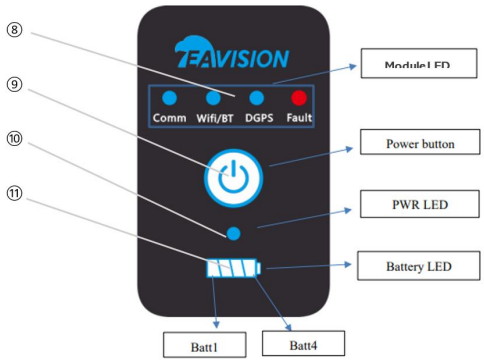

1. RTK Antenna
2. Mapping Device Housing
3. Mapping Device UI
4. 2.4G Antenna
5. Antenna Cap
6. Type-C Charging Port and Sealing Plug
7. Handle Connector
8. Status LED (Transmission, WIFI/Bluetooth, DGPS, Fault)
9. Power Button
10. Power LED
11. Battery Level LED

Mapping device operation

Appearance check

1. Make sure that the RTK antenna and 2.4G antenna are not broken.
2. Make sure the housing is properly secured to avoid water coming into circuit board to cause damage.
3. Make sure the sealing plug is firmly inserted to prevent water coming into the circuit board to cause damage.

Powering on

1. When the device is turned off, press the power button for more than 1.8 seconds, the device will enter the power-on state, 9 LEDs on the interface will light up at the same time (check whether all LEDs are working properly), and the system will be initialized after 2 seconds.
2. System initialization:
   1) The power LED stays on.
   2) The battery level LED shows the battery level and then goes out after 3 seconds.
   3) The function module LEDs light up and go off in sequence.
   4) After the power on is completed, the power LED remains on.

- The device can be turned off at any time during power on.
- At any time, pressing the power button for more than 15 seconds will shut down the device.

Powering off

1. When the device is on or working, press the power button for more than 2.5 seconds, the 9 LEDs on the interface will turn off at the same time, and the device will enter the standby state. If there is no instruction for more than 10 seconds, the device will shut down.
2. If the user presses the power button for more than 1.8 seconds during standby, the device will be kept on.

Battery level check

Press the power button for 0.1 to 0.5 seconds, the battery LED will light up for 3 seconds and display the battery level, then it turns off. If the power switch is pressed for less than 0.1 seconds or more than 0.5 seconds, the battery level will not be displayed.

- Battery level LED will show the current battery level when not charging. One bar is defined as 25% battery level
- When charging, the charging battery bar LEDs flash, and the fully charged battery bar LEDs stay on.
- When charging, the flashing frequency of the battery bar shows fast charging or normal charging.

Charging

1. Use the USB charger and Type-C charging cable to charge the mapping device.
2. To keep the mapping device battery in optimum condition, be sure to fully charge the mapping device every 3 months.

Function module LED

1. Transmission LED

In the case of transmission fault, such as transmission failure or transmission disconnection, the transmission and fault LEDs will flash synchronously.

2. WIFI/Bluetooth LED

1) The LED does not light up until WIFI/Bluetooth is connected.
2) After successful Bluetooth connection (WIFI not in use), the LED flashes.
3) When the WIFI is connected successfully (Bluetooth not connected), the LED will stay on.
4) Bluetooth connection failure:
   - WIFI/Bluetooth function failure, such as WIFI or Bluetooth fails to turn on or no SSID network, WIFI/Bluetooth and the fault LED flash synchronously.
   - WIFI/Bluetooth non-functional failure, such as the failure of Bluetooth connecting to the mobile phone or the connection failure caused by wrong WIFI account and password, the App will prompt accordingly, and the fault LED will not flash.

3. DGPS LED

1) RTK accuracy: LED stays on.
2) High accuracy, normal accuracy, low accuracy: LED flashes.
3) GPS off: LED stays off
4) GPS failure: DGPS and the failure LED flash synchronously, and the App will simultaneously prompt or broadcast the cause of the failure.

Firmware upgrade

Tap Information to upgrade the Map App.

Precautions for use

1. This product is only suitable for EAVisiondrones, do not use it on other products or for nonagricultural purposes.
2. Avoid pinching fingers.
3. Avoid using in humid environments and stay away from heat sources.
4. Make ensure that there are no obstructions around the RTK antenna to ensure product positioning accuracy when in use.
5. Firmly insert the sealing plug after charging.
6. The dismantling of scrapped products needs to be done by professionals. Relevant parts, such as motherboards, electrical components, metal parts, plastic parts, should be collected and handed over to qualified units or sanitation departments for disposal.

Mobile Base Station

Mobile base station overview

EAVisionmobile base station is a high-precision satellite signal receiver. In some areas with weak or no 4G signals, UAVs cannot receive differential signals, 4G signals, etc., so they cannot carry out agricultural operations. The mobile base station can set up local network in these areas and receive satellite signals at the same time to ensure the normal operation of the drone. The mobile base station can improve the

positioning accuracy of drone equipped with the EAVisionRTK positioning system (such as EA-30X) from the meter level to the centimeter level. The base station covers an area of 333 hectares, and provides strong resistance against magnetic interference, ensuring reliable flight in environments with strong magnetic interference such as high-voltage lines and metal buildings.

Mobile base station components

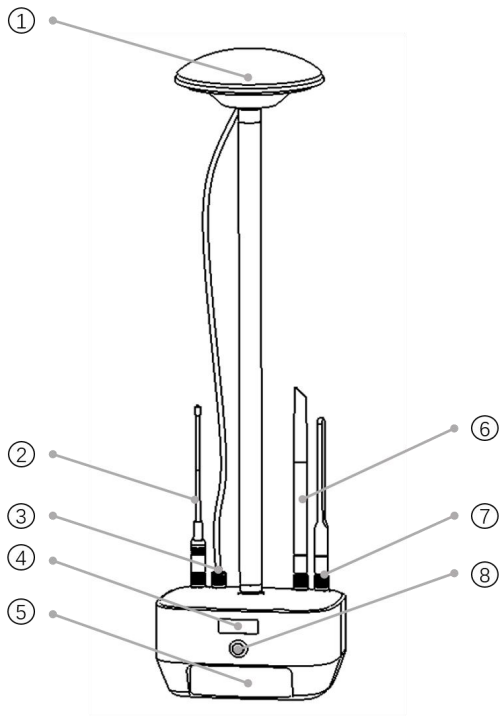

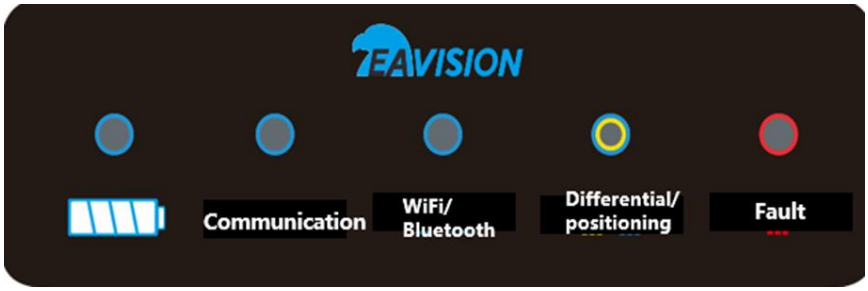

1. GPS Antenna
2. 2.4G Antenna
3. GPS Feeder Interface
4. Logo
5. Mobile Base Station UI (as shown on the right)
6. 4G Antenna
7. 4G Antenna
8. Power Switch

Base station operation

Setting up base station

1. Choose an open area to set up the mobile base station and mark, so that the mobile base station can be accurately reset after being moved.
2. Choose a flat area to set up the base station and keep the base station horizontal and stable.

- Mobile base station needs to be set up in an open area.
- Make sure that there are no obstacles (trees, buildings, etc.) within 15° or more around the base station antenna to prevent GPS signals from being absorbed or blocked.
- The mobile base station needs to be at least 200 meters away from high-power radio transmission sources (TV stations, microwave stations, etc.) and more than 50 meters away from high-voltage power lines to avoid electromagnetic interference on GPS signals.
- Do not set up the mobile base station near large area of water or strong electromagnetic sources to reduce multipath effect.

Turning on and off

1. Press and hold the power switch to turn on/off the power of the mobile base station.
2. Press the power switch to check the power of the mobile base station.

Battery level check

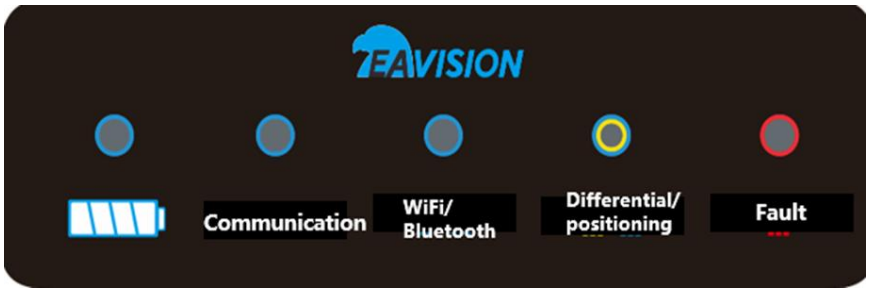

1. The Battery Level Indicator will show the current battery level when not charging. One bar is defined as 25% battery level.
2. When charging, the charging battery bar LEDs flash, and the fully charged battery bar LEDs stay on.
3. When power on, the battery status indicator stays on; if the battery status indicator and the fault indicator flash at the same time, it means the battery is low.

Charging

1. Use the USB charger and Type-C charging cable to charge the mobile base station.
2. To keep your mobile base station battery in optimal condition, make sure to fully charge your mobile base station every 3 months.

Function module LED

1. Online/offline LED

   No significance for now

2. WIFI/Bluetooth LED

   Flashing blue indicates that the phone is connect to Bluetooth.

3. Differential / Positioning LED

- Flashing yellow indicates that a differential signal is being acquired.
- Flashing blue indicates that the differential signal has been acquired.

4. Faulty LED

- The yellow Differential/Positioning LED and red Fault LED flashing simultaneously indicates no GPS signal.
- The battery level indicator and the fault indicator flashing simultaneously indicates low battery level.
- All five status LED flashing indicates that the program is not running correctly.
- After the mobile base station is powered on, the five status LED flashing in sequence indicates that the base station is self-checking.

Firmware upgrade

In offline operation mode, upgrade the firmware on the EAVision Smart AG App.

Precautions for use

1. Make sure there is nothing obstructing the antenna of the mobile base station during operation.
2. Keep the mobile base station horizontal.
3. When installing, do not over-bend or fold the wire.
4. Use the mobile base station in an open area without radio interference, be sure to turn off other wireless devices in the same frequency band.
5. Please use the original accessories or accessories certified by EAVISION. The use of non-original accessories may cause damage to the system.
6. Make sure that no foreign objects are inside the base station.
7. Do not remove any components by yourself.
8. When using in rainy and snowy weather, please take necessary waterproof measures for the mobile base station. Use it with caution in lightning weather.

App Introduction

Survey

1. Menu key: Mapping Equipment, My Requirements, Change Password, Upload Log, Map Selection, Enter Local Mode
2. Right sidebar: contains base station, mapping device, drone information (including firmware upgrading in each sector), position button.
3. Plots: Plots, New Plot, etc.
4. Demands: Demands, New Demand, etc.
5. Search Name/Number: search for plots
6. Filter: filter plots
7. Options: options for plot transfer, copy, send, split, merge, etc.
8. Ranging: map anchor ranging
9. New plot: support Calibration Draw Dots, Mapping Device, drone Draw Dots, Hand-drawn.

Smart AG

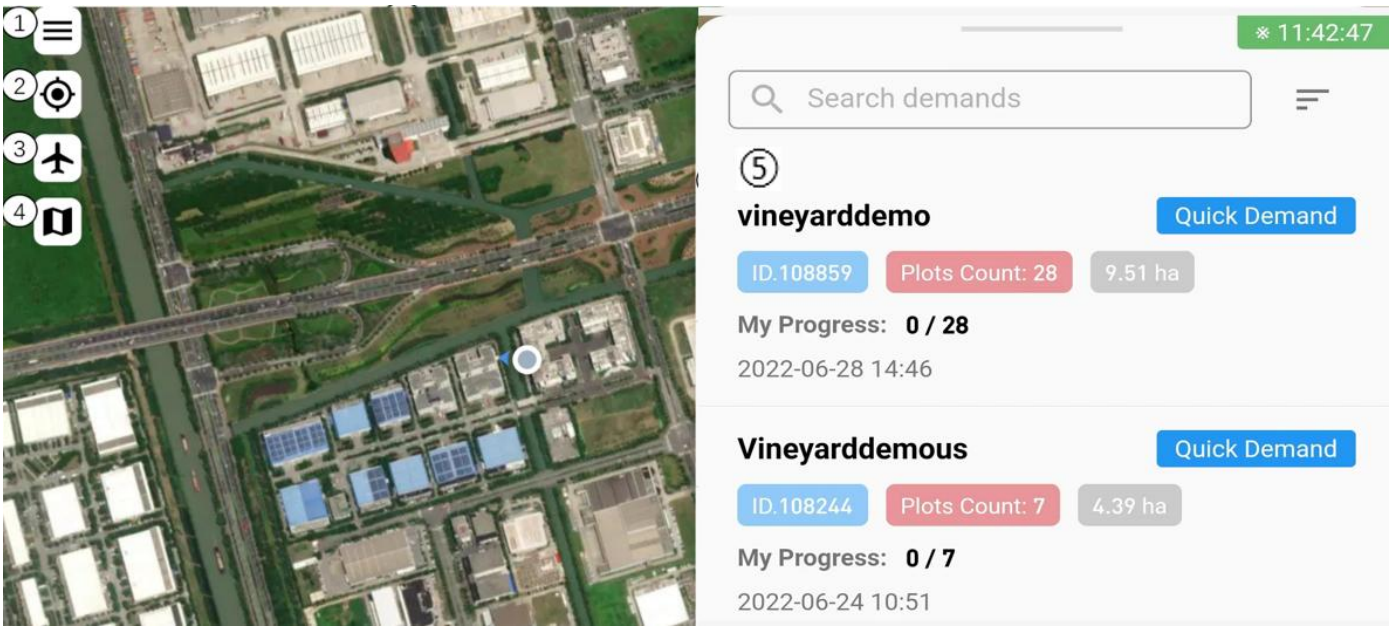

1. Menu key: contains user information, My Tasks, Upload Log, Customer Feedback, Night Flight, Avoidance, Backup Battery Status, Map Selection, Local Mode.
2. Position: locate to the current position.
3. Drones: including spray tank cleaning and other functions.
4. Toggle: toggle google maps.
5. Demands: a list of all demands and the plots within the demands are visible.

Flight

Basic operation

Starting the motor

The Combination Stick Command (CSC) listed below is used to start and stop the motors. Make sure you perform the CSC in one continuous motion. The motors begin to accelerate at an idle speed. Release both sticks simultaneously. Take off immediately once the motors are spinning, or else the drone may lose balance, drift, or even takeoff by itself and risk causing damage or injury.

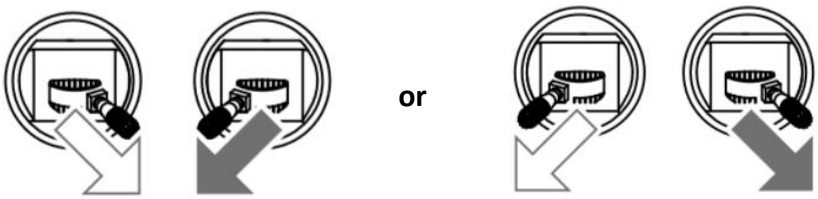

Stopping the motor

When the drone has landed, push and hold the throttle stick down. The motors will stop after three

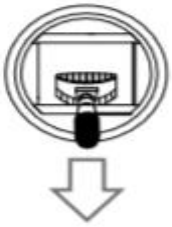

seconds.

- Spinning propellers can be dangerous. Stay away from spinning propellers and motors. DO NOT start the motors in confined spaces or when there are people nearby.
- Keep your hands on the remote controller when the motors are spinning.
- After landing, power off the drone before powering off the remote controller.

Drone operation

1. Pre-flight checklist

- Make sure that the drone camera lens, ultrasonic radar and other sensors are intact and clean.
- Make sure that the battery of the drone, remote controller, mobile base station, and mapping device are fully charged.
- Make sure the drone battery and spray tank are firmly in place.
- Make sure all parts are mounted securely.
- Make sure all cables are connected properly and firmly.
- Make sure propeller are securely mounted, that there are no foreign objects in or on the motors and propellers, that the propeller blades and arms are unfolded, and the arm locks are firmly tightened.
- Make sure the spraying system is not blocked in any way.

2. Planning plots

1) Power on the remote controller and the mapping device.
2) Open the EAVisionMap App and log in. For offline mode, please connect to the base station.3
) Go to Demands and tap New Demand.
4) Input the required information and submit.

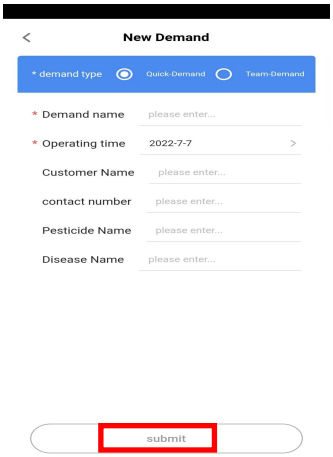

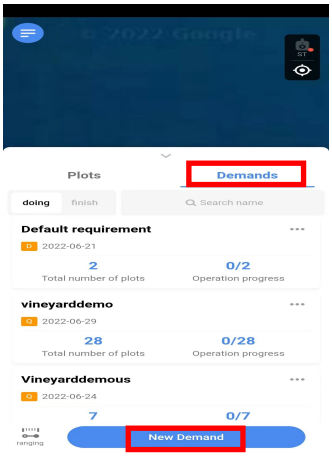

5) Enter the demand

6) Tap New Plot

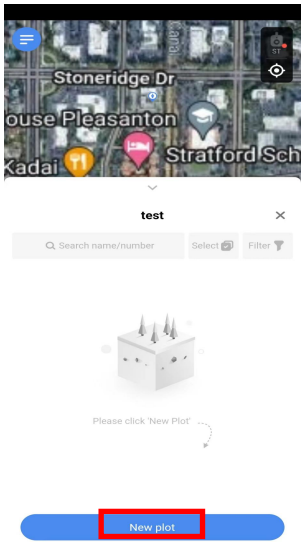

7) Select the mapping device

8) Connect the mapping tool and tap Confirm.

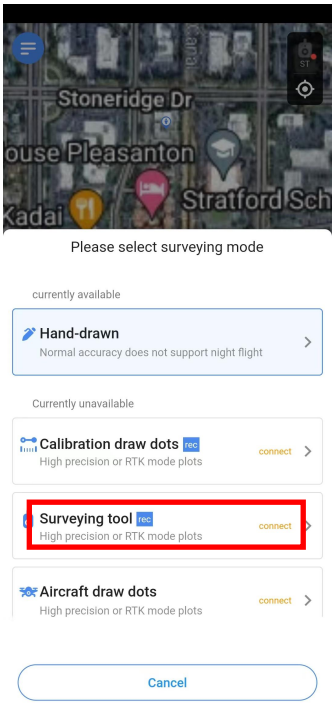

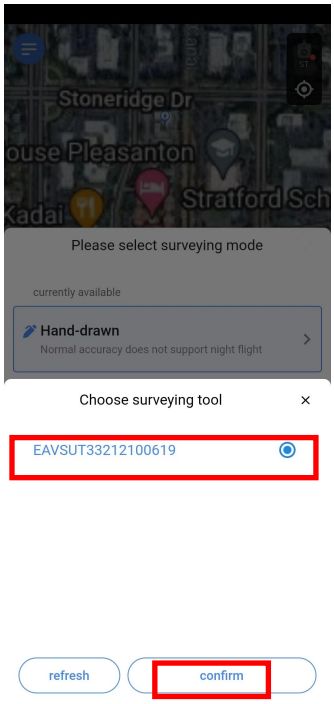

9) Output the plot information, tap Next.

10) After waiting for Satellite Number, Differential Delay, Positioning Accuracy to be green, boundary points can be recorded.

11) Then save the plot.

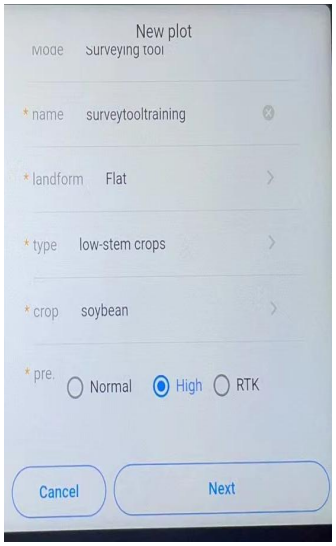

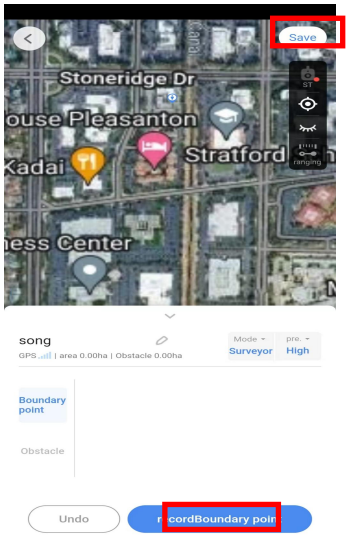

3. Flight operation (refer to the offline manual for the offline operation of the drone)

1) Power on the drone.
2) Enter the EAVisionSmart AG App and log in. To operate in offline mode, please connect to the base station, mapping device and drone.
3) Tap the menu key on the left side of the screen, then go to Drones, and follow the interface prompt to link to the drone. Tap Base Station and connect to the cloud base station.

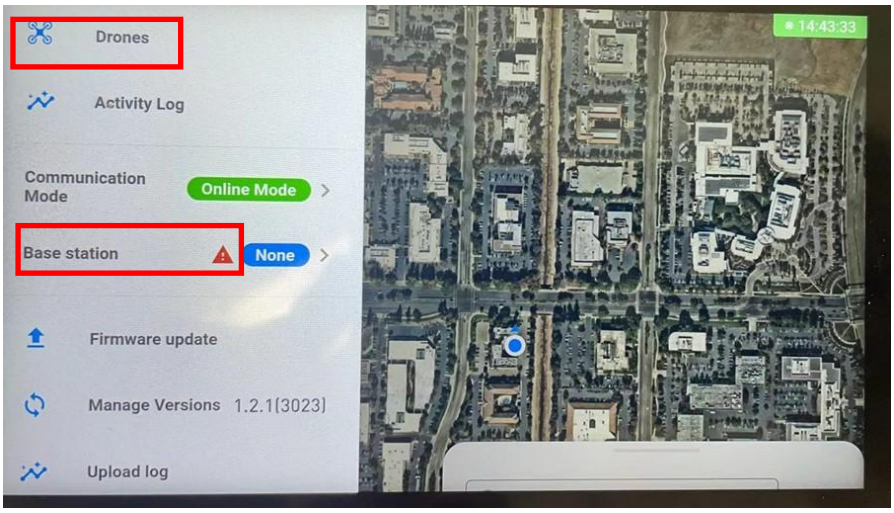

4) Tap Demands, select a plot, and set up.
   - Tap Planning, set Row Gap, check whether to enable Border Sweeping, Ref Border, Mission Spray, and Takeoff Point.
   - Tap Edit Settings, select Night Mode, and choose to enable Avoidance and Night Lights or not.
   - Save after finishing Planning and Edit Settings.

- Tap Start Operation.

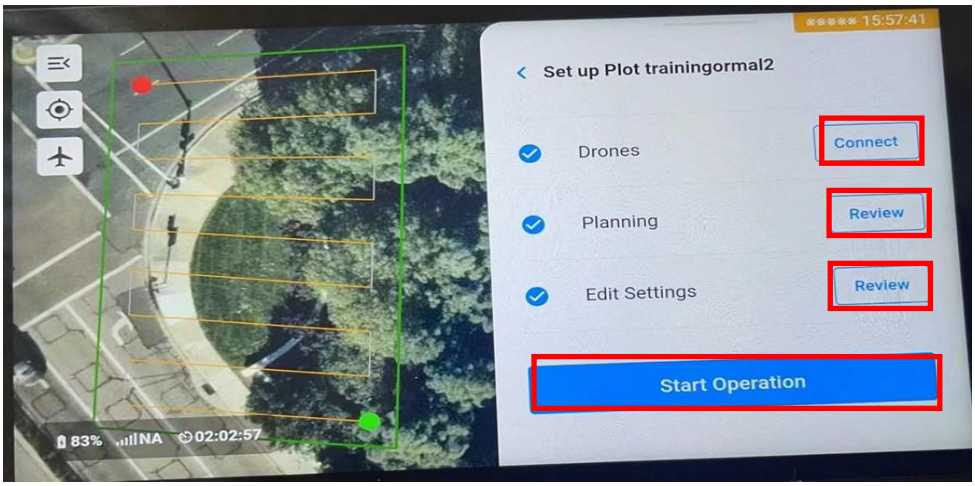

5) Click on the flight information to send the mission.

The drone performs take-off verification and requests to take off.

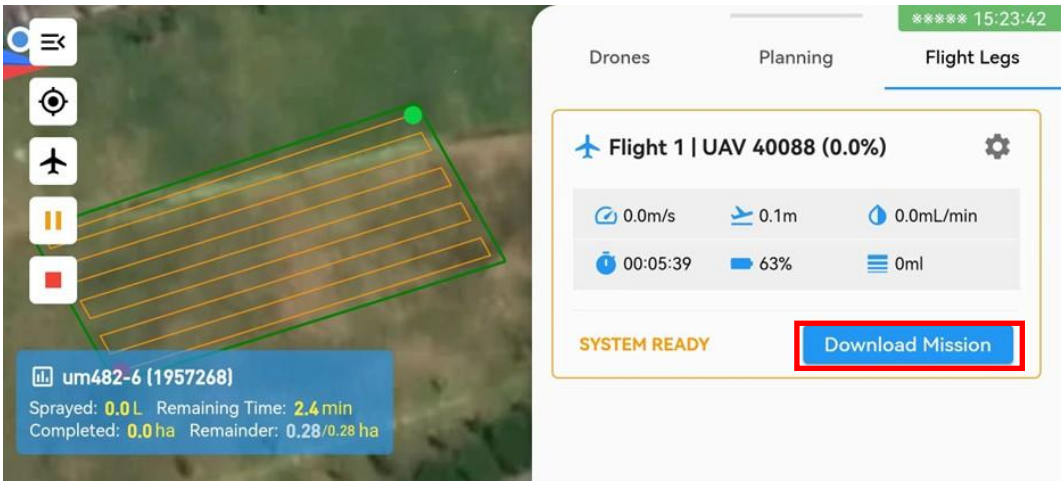

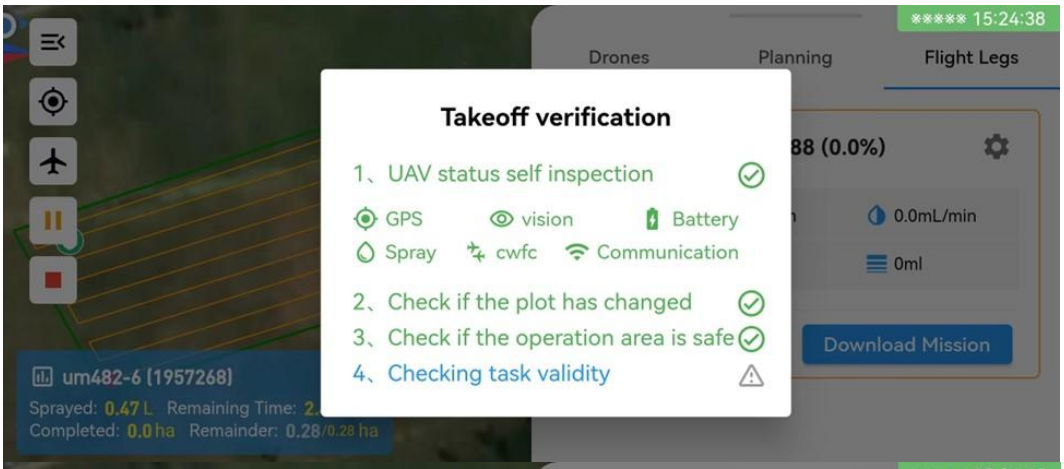

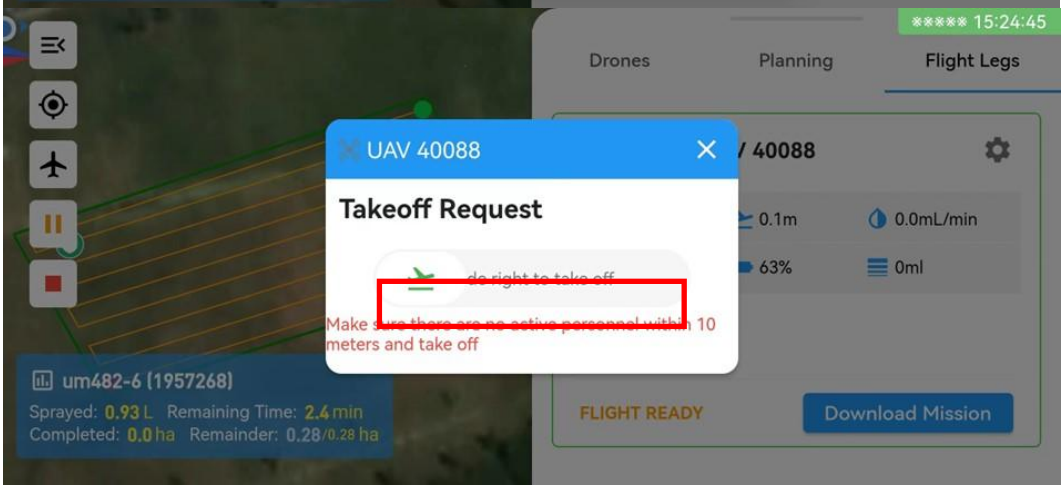

6) After landing, tap the ⏸ to suspend the operation and reset the flight and parameters. Tap ■ to terminate plot operation.

4. Safe landing

1) After landing, wait for the propeller blades to stop spinning, power off the drone and lift the battery up.
2) Turn off the backup power.
3) Turn off the remote controller.
4) Fold the propeller and the arms.

5. Transportation

1) Fold the arms and propellers before transporting.
2) Keep a distance between the camera and the shipping container to prevent damage from bumps.
3) Avoid damage to drone resulting from shifting back and forth during transportation.
4) Place the drone stably before transportation.

6. Pesticide disposal

The safety instructions provided by the pesticide manufacturer should be followed to handle the disposal of pesticides.

Maintenance

To avoid component malfunction, serious injury, and property damage, observe the following rules:

1. Clean all parts of the drone at the end of each day of spraying after the drone returns to a normal temperature. DO NOT clean the drone immediately after operations are completed.
   1) Fill the spray tank with clean water or soapy water and spray the water through the nozzles until the tank is empty. Repeat the step three times.
   2) Use a clean and soft cloth to wipe the camera lens, distance sensor and other sensor components.
   3) If there is dust or pesticide liquid on the motors, propellers, or heat sinks, wipe them with a wet cloth before cleaning the remaining water residue with a dry cloth.
   4) Store the cleaned drone in a dry environment.

2. Wipe the surface and screen of the remote controller with a clean wet cloth that has been wrung out with water daily after operations.
3. Inspect the drone every 100 flights or after flying for over 20 hours:
   1) Check for and replace worn propellers.
   2) Check for loose propeller. Replace propellers and propeller washers if needed.
   3) Check for aging plastic or rubber parts.
   4) Check for loose sensor parts and tighten them firmly.
   5) Check for loose wiring harness connectors and tighten them firmly.
4. Inspect the drone daily after operations:

1) Clean the nozzles and hoses at the end of each day of spraying or when the transition time is more than 4 hours, otherwise, the service life of the nozzles will be reduced due to blockage.
2) Check for loose spray disc and screws, dynamic balance and abnormal sound of the spray disc. Clean the debris on the disc.
3) If there is dust on the surface of nozzles that affects the heat dissipation, wipe it with wet cloth that has been wrung out with clean water or soapy water.
4) Check for loose nozzles and tighten them firmly. Check for and replace worn rubber of the shock-absorbing mount.

Troubleshooting

No	Fault	Troubleshooting Instructions
1	**Navigator Failure**	1) Re-power on (make sure the entire system is powered off and then power on again). If it works, you may continue operations. 2) If the problem persists, the drone should be powered off (including backup batteries), and the drone will be powered on again after moving the drone to another place. If it works, you may continue operations. 3) If the problem persists, please contact customer service, and upload the relevant data.
2	**Altitude Sensor Failure**	1) Power on the drone again (make sure that the entire system is powered off and then power on again). If it works, you may continue operations. 2) If the problem persists, check whether the height sensor is obstructed and whether the sensor is clean, clean the sensor with a cloth and power on again. 3) If the problem persists, please contact customer service, and upload the relevant data.
3	**Distance Sensor Failure**	Clean the lens of the distance sensor with a clean damp cloth.
4	**Remote Controller Failure**	1) Check whether the remote controller is turned on with batteries of sufficient power. 2) Check whether the remote controller is linked to the drone. Power off the drone and then on again. If it works, you may continue operations. 3) If the problem persists, please contact customer service, and upload the relevant data.

5	**Takeoff Failure**	1) Check and make sure that there are no foreign objects in and beneath the height sensor, and the interior of the height sensor is clean, and power off the drone and then on again. If it works, you may continue operations. 2) If the problem persists, please contact customer service, and upload the relevant data.
6	**Pump Failure**	1) Power off the drone and then on again. If it works, you may continue operations. 2) If the problem persists, please turn on the cleaning function to clean the spray system, observe whether the left/right water pump can be turned on and off, whether the left/right centrifugal motor is filled with water, and whether the rotor is blocked. If the problem is solved, you may continue operations. 3) If the water pump/centrifugal motor cannot be turned on normally or the motor is blocked, contact customer service for replacement.
7	**Nozzle Failure**	1) Turn on the cleaning function to clean the water pump and tap lightly on the pump body. 2) Pull out the water pipe from the end of the nozzle, observe whether the water output on both sides is the same when cleaning, and whether there is water leakage or air leakage. 3) Switch on the pump manually and check the pump temperature, contact customer service for replacement if needed. 4) Replace the flow meter.
8	**GPS Failure**	1) Power off the drone and then on again. If it works, you may continue operations. 2) If the problem persists, put the drone in an open place away from the launching tower, high-voltage line, military base, and power on again. If it works, you may continue operations. 3) If the problem persists, please contact customer service, and upload the relevant data.
9	**Weak GPS Signal**	1) Test the drone in an open area, and make sure nothing obstructing the area of more than 45 degrees between the sky horizon and the drone. Then re-power on to test. 2) Make sure that there are no launching towers, military bases, or high-voltage power lines nearby. 3) If the problem persists, please contact customer service, and upload the relevant data.
10	**Vision Sensor Abnormal**	1) Make sure that there is an official 48V power supply connected to the drone (the flight controller light is on). 2) Check if the camera light is on. If not, please power on the system again. 3) If the problem persists, please contact customer service, and upload the relevant data.
11	**Task Verification Failure**	1) Make sure APP parameters are set correctly, and the distance between the takeoff point and the waypoint is within 1,500 meters. 2) Check whether the 4G signal is normal. 3) Restart the APP and send the task again. 4) Power on the drone again. 5) If the problem persists, please contact customer service, and upload the relevant data.

12	**Landing Failure**	1) Push and hold the throttle stick of the remote controller down, and switch to manual mode at the same time to stop the motors. 2) Upload logs and contact the customer service. Move the drone to a flat place to power on to test and continue operations if it works.
13	**Exceeding Maximum Altitude Settings**	1) Switch to manual mode or use fine-tuning to adjust the operating height, then switch back to auto mode. 2) Before switching back to auto mode, make sure the height displayed by the APP is basically the same as the actual operating height.
14	**Failure to Locate Safe Zones**	1) Check whether there are obstacles between the take-off point and the operation area, if not, you may continue operations. 2) If there are obstacles between the take-off point and the field, it is strongly recommended that the user reselects the take-off spot.
15	**Fine Tuning**	1) Fine tune if the drone and obstacles are clearly visible. 2) If you can't see the drone and obstacles, nor the operation environment of the drone, tap Go Home. 3) If you can't return, make a forced landing. 4) After landing, check whether all sensors are clean, notify the backend to process the plot, and upload the flight log.
16	**Forced Landing**	1) Make sure it is safe to land the drone, then follow the voice instructions to operate. 2) If there are obstacles or water below, use the APP fine-tuning function to guide the plane to the nearest safe zone for forced landing. 3) Skilled pilots can switch to manual and fly to the nearest safe landing. Note that if it is a forced landing due to insufficient power, you must land as soon as possible, otherwise the drone will fall when the power is exhausted.
17	**Request for Exhausting**	1) Check pipes for leaks. 2) Check whether the water pump is working properly. 3) If the problem persists, please contact customer service, and upload the relevant data.
18	**Battery Failure**	1) Use another fully charged smart battery to power on the drone again. Before inserting the battery, make sure that there are no grass clippings, soil, stones, or liquid residues in the drone's battery socket. Make sure the battery is firmly inserted. If it works, you may continue operation. 2) If the problem persists, please contact customer service, and upload the relevant data.
19	**Other Warning Prompt**	1) Process according to the prompt, and then restart the system. 2) If the problem persists, please contact customer service, and upload the relevant data

List of dangers and hazards

Type	No.	Description	Solution
Dangers	1	Personal injury arising from rotating propellers	Seek medical attention immediately
	2	Accidental battery fires	Use sand or dry powder fire extinguisher to put out the fire
	3	Pesticide residue on skin or eyes	Immediately wash off with water and seek medical attention in time
	4	Beyond the designated operation area	Try to hover and make a forced landing
	5	Drone crash or corrosion caused by misoperation	Training
	6	Drone crash or corrosion caused by drone power exhaustion or drone failure.	Avoid extra-long routes
Hazards	1	Injury to crops and the environment caused by pesticide spraying	Contact relevant pesticide department for targeted remediation
	2	Injury to the environment caused by improper disposal of used batteries	Dispose of batteries properly

Warranty Service

Dear users:

Thank you for using EAVision products, please read the user manual and other documents carefully after purchasing the drone to ensure safe and reliable operation.

Warranty Rules

This product follows the principle of whoever sells it is responsible for the warranty service

- EAVisionprovides one-year warranty for its products (wearing parts excluded). For warranty periods of components and wearing parts, please refer to table 1 (P40) table 2 (P40).
- The main components of EAVisionAgricultural UAV are the UAV body, battery, charger, mapping device and remote controller.
- The warranty period will start on invoice day. After warranty period expires, EAVisionwill

consistently provide paid maintenance and after-sales services.

1. Repair

All products (parts) within the warranty period shall be repaired free of charge by the designated repairer, and shall be subject to the supervision of the manufacturer and the seller in accordance with the contract.

2. Replacement

1) Within 15 calendar days of receiving the product and without using the product if the product does not match the original description of the product in one or more significant respects, users can request replacement service with shipping costs borne by the sales agent.
2) During warranty period, users can request replacement service if the repair work of agricultural machinery have not been finished after 30 working days from the date of repair. And the seller shall replace the product of the same model and specification free of charge with the warranty certificate, maintenance and repair records and purchase invoice.
3) During warranty period, if the agricultural machinery cannot work properly due to the same quality problem after being repaired twice; or within 30 days from the first operating season of the agricultural machinery purchase, except for the wearing parts, users can request replacement service for the relevant main components or systems for free with the warranty certificate, maintenance and repair records, and the purchase invoice.

3. Return

1) If the manufacturer and seller have not clearly informed the scope of application of this drone and thus causes the drone malfunction, users can ask for return with the purchase invoice within 30 days of the first operating season of the product purchase date, and the seller shall refund according to the purchase invoice amount.
2) Users can ask for return if replacement cannot be done due to short supply of the same products.

4. The following scenarios are outside the scope of warranty:

1) Users cannot prove that the product is within the validity period of the warranty.
2) The product is out of warranty period.
3) The machine code, factory label and other signs are inconsistent with the information on the order, or there are signs of tearing or alteration, and the source cannot be proved.
4) Product damage resulting from failure to follow the user guide to properly use and maintain.
5) Equipment failure or damage caused by the user or operator disassembling the flight controller, CPU control module, power supply module, GPS and transmission module, camera module, height sensor, distance sensor, frame, power ESC module, and power motor without authorization.
6) Equipment failure or damage caused by abnormal factors such as product water ingress.
7) Damage caused by the user or operator's unlicensed operation, improper operation or not following the instructions.
8) The user or operator performs that does not meet the requirements of official instructions and

guidelines.

9) Direct or indirect failure or loss caused by unairworthy flight, such as equipment aging alarm, bad weather, complex electromagnetic environment or strong interference source, take-off when exceeding the maximum payload weight.
10) Direct or indirect failure or loss caused by force majeure such as natural disasters, wars, terrorist attacks, riots, and coups.
11) Failure or damage not caused by the design, manufacture, quality, etc. of the product itself.
12) All loss of rental equipment due to theft, robbery, etc.
13) After the error occurs, the user repairs by himself or entrusts a non-official repairer to repair the machine, resulting in the inability to make a technical appraisal of the cause of the failure.
14) After contacting EAVisioncustomer service for replacement service, the corresponding item was not sent within 7 calendar days.

- If the product needs to be repaired or tested, please back up the data of the machine in time. EAVisionis not responsible for damage caused by data loss.
- The user should make a qualified acceptance and test after receiving the product, and check the tools, accessories and fittings that come with it.
- The user should receive training on operation, maintenance and safety precautions from the sales agent before use.
- Users should provide accurate and valid user information to the sales agent when purchasing the machine, so that the sales agent can go through the relevant registration and agreement procedures.
- Users can inquire about repair or replacement for product or parts that are outside the scope of warranty, and pay for the service if needed.

5. After-sales service charging principle and user payment method

1) EAVisionprovides after-sales service in accordance with the terms listed in the sales contract.2
) During the warranty period, EAVisionprovides free after-sales service such as installation, commissioning, and maintenance.
3) After the after-sales service is completed, the user should remit the money to the company by wire transfer within three days, and the corresponding handling fee shall be borne by the user. If the user fails to pay the fee seven days after the completion of the service, the company will charge a late fee, which is the total after-sales service fee multiplied by 1% per day.
4) If the user defaults on after-sales service fees twice without any reason, EAVisionhas the right to suspend the provision of paid after-sales service to the user.

6. If EAVisionlaunches other preferential sales policies, it will be implemented according to its specific provisions.

Table 1 Warranty List of EAVisionUAV Products

Serial No.	Components Name	Warranty Period
1	Flight Control Module	12 months
2	CPU Control Module	12 months
3	Power Supply Module	12 months
4	GPS and Transmission Module	12 months
5	Camera Module	12 months
6	Distance Sensor	12 months
7	Spray Control Module	12 months
8	Base Station and Charger	12 months
9	Mapping Device and Charger	12 months
10	Frame	12 months
11	Spray Tank	12 months
12	Remote Controller (Including Receiver)	12 months
13	Power Battery Charger	12 months
14	Power ESC Module	12 months
15	Power Motor	200 hours (cumulative working hours) or 6 months, whichever is earlier
16	Power Battery	12 months or 1500 cycles, whichever is earlier
17	Nozzle	6 months or 1,333 hectares, whichever is earlier
18	Water Pump	333 hectares
19	Night Flight Light	12 months or 200 hours, whichever is earlier

Table 2 List of Wearing Parts

Serial No.	Components Name	Warranty Period
19	Connectors, Wires	1 month
20	Hoses, Joints, Tees, etc.	1 month
21	Landing Gear and Connector	1 month
22	Propeller Blade	1 month
23	Plastic Parts	1 month

Nozzle Warranty Special Instructions

Products are not covered by the warranty under the following circumstances:

1. Damage caused by nozzle blockage due to spraying with powder pesticides.
2. Damage caused by bumping, striking, or cracking the nozzle during transportation.
3. Product damage caused by drop, collision, water, fire, etc.
4. Damage caused by extreme or improper use, such as idling spinner disc for more than 5 minutes.
5. Damage caused by installation and disassembly not in accordance with the official instructions.
6. Damage caused by nozzle blockage in adverse weather such as sandstorm.
7. Damage caused by failure to follow official care and maintenance instructions.
8. Users are unable to provide the nozzle number, drone model, number of hectares operated by the drone, invoice and other relevant information on the use of the drone.

Warranty Certificate

<table>
<tr><td colspan="5">Suzhou EAVisionRobotic Technologies Co., Ltd
Warranty Certificate
(Customer)</td></tr>
<tr><td rowspan="4">Product Information</td><td>Product Name</td><td colspan="3">EA-30X Smart Agricultural Drone</td></tr>
<tr><td>Model</td><td colspan="3">3WWDZ-30B</td></tr>
<tr><td>Manufactured In</td><td colspan="3">Suzhou, China</td></tr>
<tr><td>Serial Number</td><td colspan="3"></td></tr>
<tr><td rowspan="2">User Information</td><td>Name</td><td></td><td>Address</td><td></td></tr>
<tr><td>Phone Number</td><td></td><td>Email</td><td></td></tr>
<tr><td rowspan="4">Sales Information</td><td>Seller</td><td></td><td>Address</td><td></td></tr>
<tr><td>Contact Number</td><td></td><td>Email</td><td></td></tr>
<tr><td>Sales Date</td><td></td><td>Unit Price</td><td></td></tr>
<tr><td>Invoice Number</td><td></td><td>Seller Stamp</td><td></td></tr>
<tr><td rowspan="2">Manufacturer Information</td><td>Manufacturer Name</td><td></td><td>Address</td><td></td></tr>
<tr><td>Phone Number</td><td></td><td>Email</td><td></td></tr>
<tr><td>Return Proof</td><td colspan="4"></td></tr>
</table>

(Record)					
Maintenance Records	Repair Date	Delivery Date	Failure Description	Repair Details	Repairer

Remarks:

1. This certificate is valid when it is stamped by the authorized seller of Suzhou EAVision Robotic Technologies Co., Ltd.
2. For details, please refer to the applicable detailed list of warranty service.

Specifications

Product model	3WWDZ-30B
Drone	
Weight of drone	37.1kg (with battery)
Maximum payload weight	67.1kg
Maximum wheelbase	2200mm
Dimensions	2350×2760×620mm (Arms and propellers unfolded) 1450×1880×620mm (Arms unfolded, propellers folded) 1260×630×620mm (Arms folded)
Hovering accuracy	RTK enabled: horizontal ±10cm, vertical ±10cm RTK disabled (within 4 minutes): ±10cm horizontal, ±10cm vertical
No-load hovering time	22min
Full-load hovering time	8min 20s
Types of satellite receivers	BeiDou Navigation Satellite System (BDS), GPS, GLONASS
Obstacle avoidance	Visual Obstacle Avoidance
Propulsion - motor	
Stator size	111×15mm
Motor KV value	95 rpm/V
Operating voltage	53.6V
Rated power (single motor)	2400W
Propulsion system - propeller	

Diameter	Φ1041mm
Number of rotors	4
Rotor material	Composite materials
Mist spraying system - spray tank	
Volume	30L
Operating payload	30kg
Mist spraying system - nozzles	
Model	CCMS-L20000
Spray bar length	1720mm
Number of nozzles	2
Droplet size	10 – 100μm
Maximum spray width	4.5 – 8m
Mist spraying system - water pumps	
Liquid pump form	Diaphragm pumps
Rated power	120W
Operating pressure	0.8 – 1.2MPa
Operating current	≤2.5A
Spraying flow rate	5L/min×2
Binocular vision	
Field of view (FOV)	Horizontal ± 60°, vertical ± 35°
Obstacle avoidance speed	≤5m/s
Millimeter wave radar	
Square wave width	±34°
Pitch width	-6.5° – +3°
Mapping range	0.1 – 30m
Mapping accuracy	0.002m
Operating voltage	5 – 12V
Operating temperature	-40 – 85℃
Power consumption	2W
Lidar	
Mapping range	0.15 – 40m
Mapping accuracy	2 – 10cm
Scan angle	0° – 360°

Horizontal parallelism	±0.1° – ±0.3°
Smart Battery	
Model	JM2 Li-ion (29000mAh, 51.8V)
Weight	10.8kg
Capacity	29000mAh
Voltage	51.8V
Warranty	One year or 1500 cycles
Battery fill time	11min (30% – 95%)
Waterproof level	IP65
Smart Protection	Short circuit protection, overcharge protection, overcurrent protection, fire protection, etc.
Smart Charger	
Model	JM-C3-7000
Charging power	7000W (220V power supply)
Input voltage	90 – 290V
Output voltage	58.8V
Output current	120A
Weight	Approx. 13kg
Dimensions	400×300×240mm
Smart Protection	Over temperature, over voltage, under voltage, short circuit, fan stall protection, etc.
Smart Remote Controller	
Weight	850g
Maximum transmission distance	1.5km
Screen	5.5-inch, 1920×1080
Maximum brightness	1000cd/㎡
Battery capacity	10200mAh
Charging time	6 hours
Duration	12 hours
Charging method	20W PD
Operating temperature	-10℃ – 55℃
Waterproof level	IP53
FPV camera view	120°

Night flight lights	
Dimensions	106.5×110.2×160.6mm
Weight	550g×2
Power	300W
Illuminated area	Approx. 400 ㎡
Illumination distance	20m
Light intensity	700LUX@5m direct light
Lifespan	>200 hours
Smart Protection	Overcurrent, overvoltage, short- circuit and overheat protection
Mapping device	
Dimensions	171×63×55mm (without extension rod)
Operating hours	>8 hours
Waterproof level	IP65
Extension Rod	4×500mm
Weight	400g (without extension rod)
Signal	GPS/BEIDOU/GLONASS

Note: The above parameters are only for reference, the actual configuration is subject to the contract and the acceptance form. If the performance parameters are upgraded or changed in the future, no prior notice will be given.

FCC Warning:
Please take attention that changes or modification not expressly approved by the party responsible for compliance could void the user's authority to operate the equipment.

This device complies with Part 15 of the FCC Rules. Operation is subject to the following two conditions:
(1) This device may not cause harmful interference, and
(2) This device must accept any interference received, including interference that may cause undesired operation.
This equipment complies with FCC/IC RSS-102 radiation exposure limits set forth for an uncontrolled environment. This equipment should be installed and operated with minimum distance 20cm between the radiator & your body.

Follow EAVision Official Social Media Channel:

YouTube, Facebook, Twitter, LinkedIn, Instagram

The contents of this manual and product specifications are subject to change without prior notice.

Suzhou EAVision Robotic Technologies Co., Ltd.

Address: Room 504&505, Building 2, Nanopolis District II, No.333, Xingpu Road, SIP Suzhou, Jiangsu, China

Website: www.eavisionag.com

www.eavisiontech.com

Contact Number: 4008002872 or +1(925)292-0004