Eavsion Unicom Map Survey

User Mannual

V1.1/2022.08

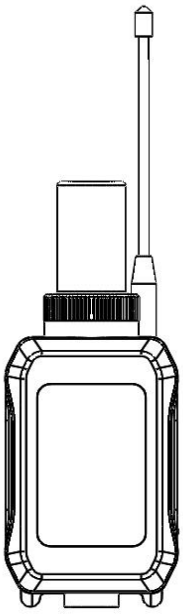

EAV-SUT30

SUZHOU EAVISION ROBOTIC TECHNOLOGIES CO., LTD

Address: Unit 1-A, No.3 Workshop, 28 Xiasheng Road, SIP, Suzhou, China

Website: www.eav.top

Tel：4008002872

Table of contents

Surveying 1
Disclaimer 3
Precautions 3
Product overview 4
Surveying Structure 4
1. RTK antenna 4
2. Antenna cap 4
3. Surveying front cover 4
4. surveying middle cover 4
5. surveying back cover 4
6. UI interface 4
7. Connecting rod seat 4
Chcek List Before Use 5
1. Visual inspection 5
3. Shutdown check 5
4. Battery check 5
5. Battery display 5
6. low battery indicator 6
7. Function LED introduction 6
Operation steps 7
Appendix 11
Product parameters 11
Warranty 11
Appendix Ⅰ 13

Disclaimer

Thanks for choosing the EA-SUT30 by Suzhou EAVISION Robotic Technologies Co., Ltd. (hereinafter referred to as "EAVISION"). Please read and abide by the relevant requirements of this manual carefully, operate in strict accordance with the instructions in actual operation process and maintain in a timely and detailed manner. The use of this product shall be deemed as the approval and acceptance of the entire contents of this manual. This product is not suitable for people under 18. Before using this product, please accept the formal training of EAVISION and obtain the qualification certificate. While using the product, the user promises to be responsible for his/her actions and all consequences arising therefrom. EAVISION shall not be borne by all losses caused by the user's failure to use the product in accordance with this document and user manual, and shall not be liable for any indirect, consequential, punitive, incidental, special or punitive damages.

EAVISION shall not be borne by any loss or injury caused by non-use, modification or disassembly of the original parts.

EAVISION shall not be liable for any consequences arising from the use of this product in violation of laws and regulations.

EAVISION reserves the right to update this disclaimer.

Precautions

- Dismantling of scrapped products should be done by professionals. Relevant parts, such as electrical components and motherboards, metal parts, plastic parts, etc., should be collected separately.
- The collection and delivery shall be handled by the qualified unit or the environmental sanitation department.
- The map corrector is only suitable for Jimu series agricultural plant protection machines. Do not use it on other products or for purposes other than agricultural plant protection.
- Be careful when using it, and beware of injury to the mechanical structure.
- Avoid using it in a humid environment; l Try to ensure that there are no obstructions around the RTK antenna during use to ensure product positioning accuracy.
- Tighten the sealing plug in place after charging.
- Use away from heat sources.

Product overview

EA-SUT30 V1.0 is a product developed by Suzhou EAVISION Robotic Technology Co., Ltd. for the needs of high-precision map surveying and mapping. By receiving RTK signals, it helps users to achieve high-precision boundaries, area mapping and obstacle identification of operating plots.

Surveying Structure

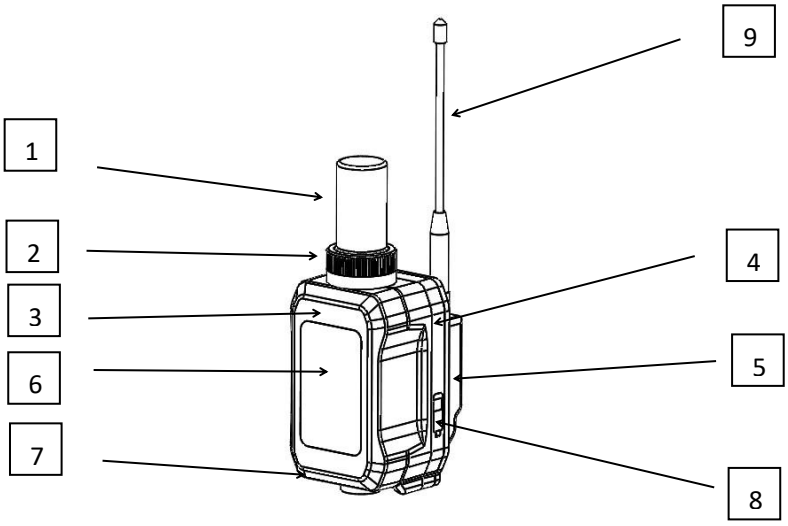

1. RTK antenna
2. Antenna cap
3. Surveying front cover
4. surveying middle cover
5. surveying back cover
6. UI interface
7. Connecting rod seat
8. Type-C charging port
9. 2.4G antenna

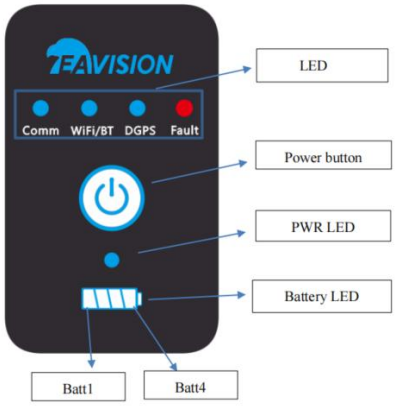

Chcek List Before Use

1. **Visual inspection**
   (1) Whether the RTK antenna is damaged
   (2) Check whether the casing is damaged, so as to prevent the circuit board from being damaged due to the entry of external water
   (3) Whether the sealing plug is tightly closed to prevent the circuit board from being damaged due to the entry of external water
2. **Power-on check**
   (1) When the device is in the off state, after pressing the Power button (t>1.8s), the device will enter the on state, and the 9 LEDs on the interface will light up at the same time (mainly to check whether all the LEDs work normally), after 2s, the device will enter the power-on state. system initialization;
   (2) System initialization:
      ① PWR LED is always on;
      ② The Battery LED first displays the battery level (3s) and then turns off
      ③ Function module LEDs (communication, WiFi/Bluetooth, DGPS, fault) turn on and off in sequence
      ④ After the startup is completed, the PWR LED continues to keep on
   (3) Note
      ① It can be turned off at any time during startup.
      ② At any time, pressing the Power button for more than 15s will trigger the device (hardware) to force shutdown.
3. **Shutdown check**
   (1) When the device is on or working: Press the Power button (2.5s<t<15s), the 9 LEDs on the interface will turn off at the same time, and the device will enter the standby state first. If there is no instruction for more than 10s, the device will enter the shutdown state ;
   (2) If the user tries to press the Power button to turn on the device during standby (t>1.8s), the device will resume the power-on state; if there is no instruction after 10s, the device will enter the power-off state;
4. **Battery check**
   (1) Short press the switch button (0.1s<t<0.5s), observe the battery light to display the remaining power;
   (2) After pressing the Power button (0.1s<t<0.5s), the Battery LED will display the battery level (3s), and after the display is over (>3s), the LED will turn off; if you press the Power button (t<0.1s or t>0.5 s), the power is not displayed (the command is regarded as invalid);
5. **Battery display**
   (1) In the case of non-charging,:after pressing the Power button (0.1s<t<0.5s), the user can check the power according to the displayed power grid information.
   For example: when 50%<SoC<75%, Batt1+Batt2+Batt3 is always on for 3s, and goes out after 3s;
   (2) When charging: the corresponding battery bar flashes, and the fully charged battery bar is always on. For example: when charging 50%<SoC<75%.Batt1+Batt2 are always on, and Batt3 is blinking. When the battery is fully charged, the 4 battery bars are always on. The flashing frequency of the battery bar indicates fast charging or slow charging.

6. low battery indicator

(1) Working status: Low battery (estimated remaining usage time＜＝30min) ,Batt1 keeps flashing (on for 1s, off for 1s), and stops flashing when charging;

(2) Off status: Low battery (estimated remaining usage time＜＝30min) ,Batt1 keeps flashing (on for 1s, off for 1s),within 3s of battery display keep flashing;

7. Function LED introduction

Functional module LEDs include Comm LED, WiFi/BT LED, DGPS LED, and Fault LED.This part mainly introduces the working display and related faults of the first three LEDs, and the next part mainly introduces fault information and LED display when warning or module failure occurs.

In the application of the function module, the default is the following three cases.

- When the device is working, the online mode and offline mode will be placed on the ground station (base station) App for switching operations;

(1) Comm LED disaplay

When there is a communication failure, such as communication failure or communication disconnection, the communication LED + fault LED flashes synchronously;

(2) WIFI/BT LED disaplay

BT is enabled by default when the device is working。 The user selects the device to be connected by displaying the scanned device information on the App.

① Before WiFi/BT is not connected, the LED does not light up;

② After the BT connection is successful (WiFi is not in use), the LED flashes;

③ When the WiFi setting is successfully connected (BT is not connected), the WiFi/BT LED is always on;

④ BT performs pairing and connection process through the device information displayed on the App:

- If only one device is scanned, pair it directly (no manual operation required);
- If multiple devices are scanned, the App will prompt you to select a paired device;

⑤ BT pairing failed:

- WiFi/Bluetooth LED malfunction:

  Such as WiFi/Bluetooth failure (Wifi turn-on failure, Bluetooth turn-on failure or WiFi can't find SSID network), WiFi/Bluetooth LED + Fault LED flashes synchronously;
- In the event of a WiFi/Bluetooth LED malfunction:

  The app prompts accordingly, and the fault LED does not flash.

  a. the device is not bound to the drone or registered in the background;

  b. BT pairing on the mobile phone fails;

  c. Pairing failure due to wrong WiFi name or WiFi password.

(3) DGPS LED dsaplay

① RTK accuracy: LED is always on;

② High precision, common precision, low precision: LED flashes;

③ When GPS is off: always off;

④ When the GPS fails (the app will prompt or broadcast the cause of the failure synchronously) (such as unable to enter the positioning) DGPS LED + fault LED Flashes in sync.

Operation steps

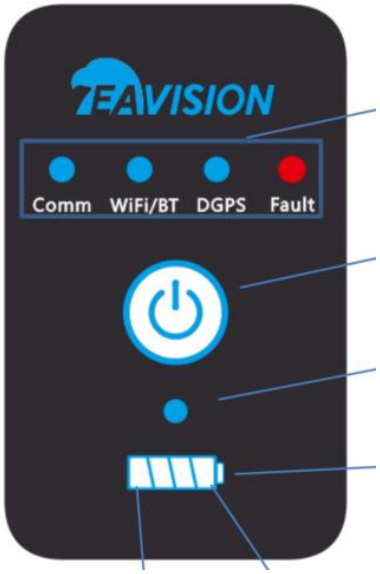

➢ Turn on the plotter

Press and hold the power button of the plotter for 1.25s-2.25s to turn it on, and wait for the "wifi/BT" light of the plotter to be always on

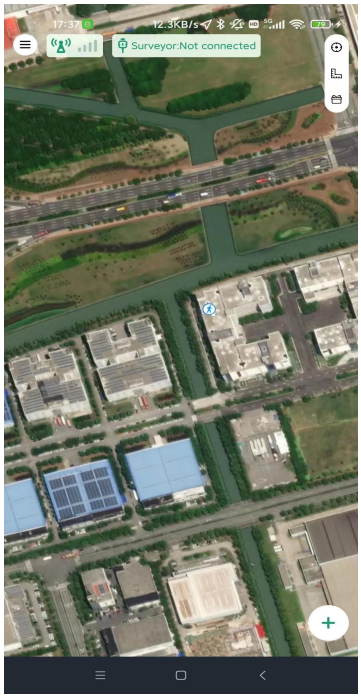

➢ App pairing to connect to the mapper

Open the "EA-SUT30 and Mapping" app on your mobile phone and click the connection entry of the surveyor at the top of the screen

➢ Click the corresponding mapper name in the device list

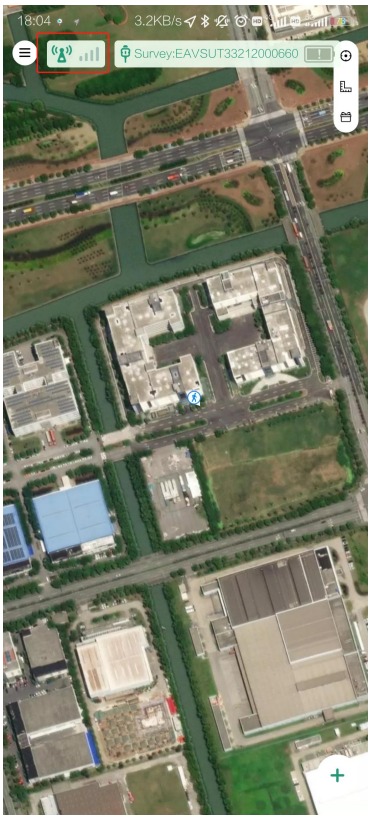

➢ After successful pairing, the name of the plotter will be displayed on the top of the screen. And automatically connect to the cloud base station, you can click the cloud base station entrance in the upper left corner to check whether the connection is successful.

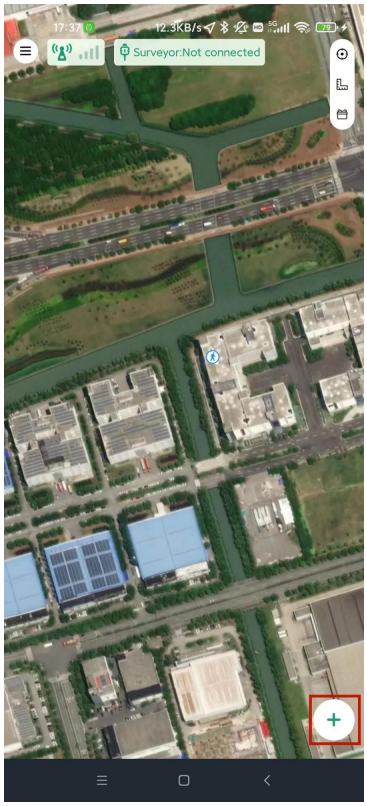

➢ Select the required new plot

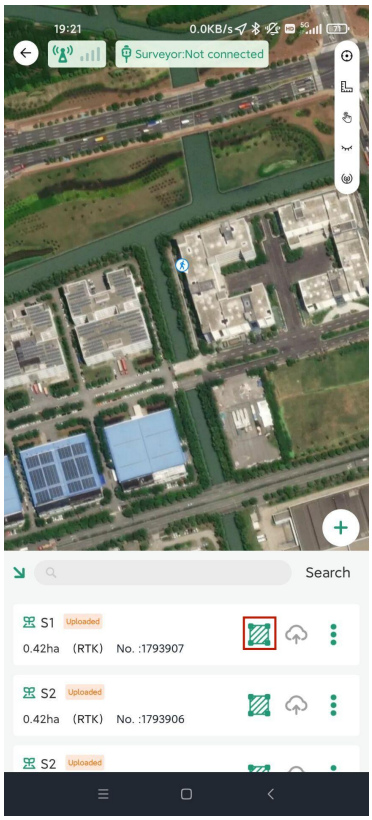

➢ Modify parcel information

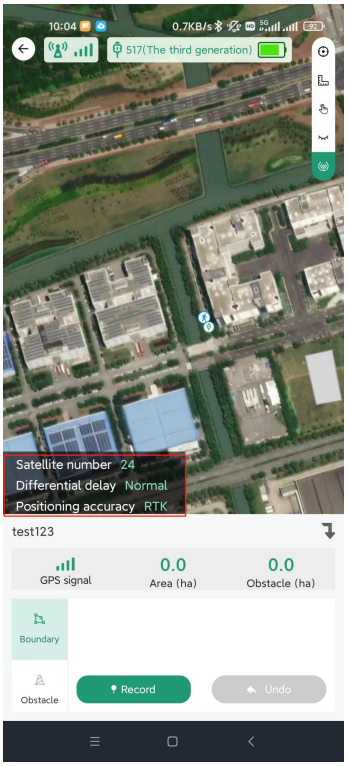

➢ Waiting for the number of satellites>10, difference: normal, positioning accuracy: RTK. And "Record Boundary Points" is highlighted, you can start marking

Appendix

Product parameters

Surveying parameters	Size	171*63*55mm(witout extension bar)
	Working hours	＞8H
	Waterproof rating	IP65
	Extension rod	500mm*4
	Weight	400g(without extension rod)
	Signal	GPS/BDS/GLONASS
	Input voktage/frequency	100-240V~50/60hz
	Output voltage	5V-3A/9V-2A/12V-1.5A

Warranty

The scope of application of the "Three Guarantees" of the map corrector.

1. Products subject to free warranty service must meet the following conditions:

- Normal use within the specified product warranty period;
- Caused by quality reasons such as product performance failure;
- The product code, factory label and other markings are consistent with the information on the order confirmation, and there is no sign of tearing or alteration;
- Provide legal and valid proof of purchase (contract or invoice) and warranty card.

2. Damage or failure of the warranty parts due to the following reasons is not covered by the free warranty:

- Equipment failure or damage caused by disassembly by the user or operator;
- Equipment failure or damage caused by abnormal factors such as product ingress;
- Damage caused by the user or operator not following the instructions or operating procedures;
- Failure or damage caused by the forced use of the product by the user or operator beyond the normal use conditions;
- Modifications or installations by users or operators that do not meet the requirements of official instructions and guidelines;
- Any human or external reasons that are not the responsibility.
- Direct or indirect failures or losses caused by use under unsuitable conditions (such as equipment alarms, bad weather, etc.);
- Direct or indirect failures or losses caused by force majeure such as natural disasters, wars, terrorist attacks, riots, and coups;
- All loss of rental equipment due to theft, robbery, etc.;
- Other failures or damages not caused by the product's own design, manufacture, quality, etc.;
- The product is damaged or lost due to falling that is not due to the quality of the product itself.

3. In the event of failure of product components not covered by the warranty, the user has the right to consult

Party A for repair or replacement matters, and the repair and replacement costs shall be determined by both parties through negotiation.

4. In the case of the company launching other preferential sales policies, it shall be implemented in accordance with its specific provisions.

FCC Statement

Please take attention that changes or modification not expressly approved by the party responsible for compliance could void the user' s authority to operate the equipment.

This device complies with Part 15 of the FCC Rules. Operation is subject to the following two conditions:

(1) This device may not cause harmful interference, and
(2) This device must accept any interference received, including interference that may cause undesired operation.

This equipment complies with FCC/IC RSS-102 radiation exposure limits set forth for an uncontrolled environment. This equipment should be installed and operated with minimum distance 20cm between the radiator & your body.

Appendix I

EAVISION Robotics Technologies

Warranty Certificate

(Customer)

Product Information	Product Name	Autonomous Plant Protection Drone			
	Model Specification				
	Manufactured In	Suzhou, China			
	Serial Number				
User Information	Name		Address		
	Phone Number		Email		
Sales Information	Sales Unit		Address		
	Contact Number		Email		
	Sales Date		Unit Price		
	Invoice Number		Sales Unit Stamp		
Manufacturer Information	Manufacturer Name		Address		
	Phone Number		Email		
Maintenance Records	Repair Date	Delivery Date	Failure Description	Repair Details	Repairer

Remarks:

1. This certificate must be stamped by the authorized sales unit of EAVISION Robotic Technologies Co., Ltd. to take effect.
2. For details, please refer to the Applicable detailed list of company guarantees.

Please Follow EAVISION Official Social Media Channel:

YouTube, Facebook, Twitter, LinkedIn, Instagram

The contents of this manual and product specifications are subject to change without prior notice.

Suzhou EAVISION Robotic Technologies Co.,Ltd.
Address: Unit1-A, No.3 Workshop, 28 Xiasheng Road, SIP, Suzhou, Jiangsu Province, China
Website: www.eav.top Contact Number: 4008002872