Attachment A

Type / Model Name : Power Check II Magazine

Product Description : 2.4 GHz Module

Applicant : OTT-JAKOB Spanntechnik GmbH

Address : Industriestrasse 3-7

87663 LENGENWANG, GERMANY

Manufacturer : OTT-JAKOB Spanntechnik GmbH

Address : Industriestrasse 3-7

87663 LENGENWANG, GERMANY

according **to**

Test Report No. : T45791-02-00HS	07. September 2020 Date of issue

The test report merely corresponds to the test sample. It is not permitted to copy extracts of these test results without the written permission of the test laboratory.

1.2 Internal views:

Top view

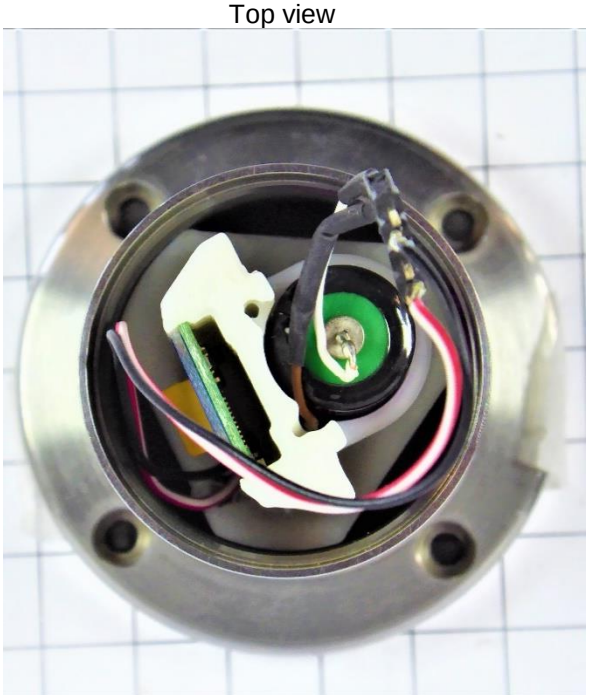

Isometric view

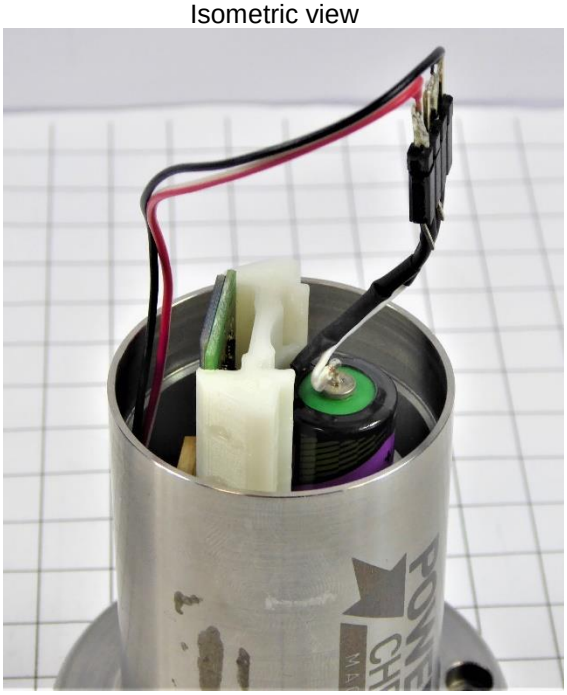

RF-Module front

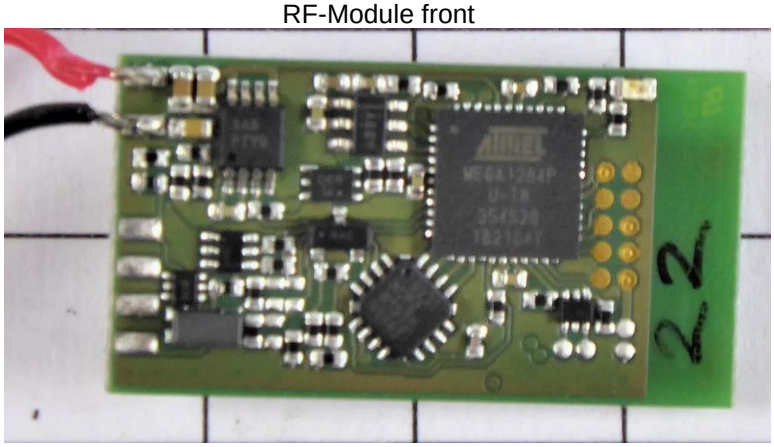

RF-Module back

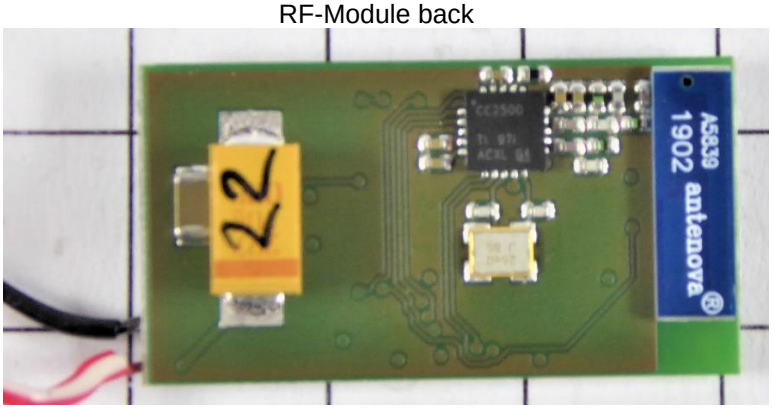

- End of Attachment A -

The test report merely corresponds to the test sample. It is not permitted to copy extracts of these test results without the written permission of the test laboratory.