WIRELESS MOUSE
INSTRUCTION MANUAL

TECHNICAL SPECIFICATIONS

- Connection method: 2.4G/Bluetooth
- Resolution: 1200 default
- Return rate: 120Hz
- The number of keys: 3+1 (Mode Switch)
- Key life: 500 Ten thousand times
- Rated voltage: 3.7V
- Rated current: 10mA
- Product size: 111*61.8*31.4mm
- Product weight: 87g
- System compatibility: Windows 7, Windows 8, Windows 10 or a higher version Bluetooth 5.0 or above version

PACKAGING CONTENT

- Mouse (built-in receiver)
- Type-C data cable
- Instruction Manual

2.4G CONNECTION METHOD

1.Open the receiver cover at the bottom of the mouse, take out the receiver,and turn on the power switch;
2.Click the mode switch button at the bottom of the mouse, and the corresponding indicator light will be red for 2.4G;
3.Insert the receiver into the USB port of the computer;

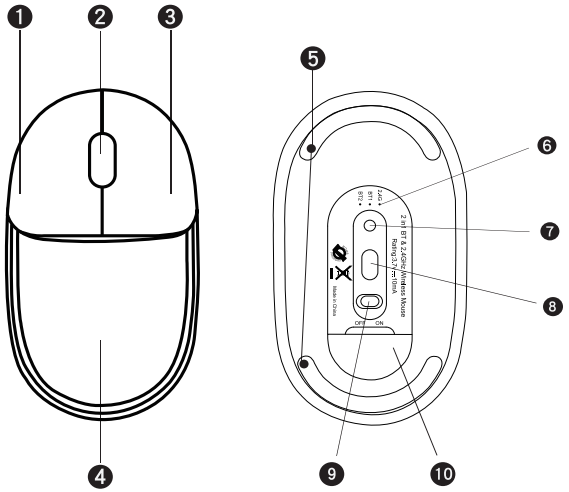

FUNCTION OVERVIEW

1.Left mouse button
2.Roller (middle key)
3.Right-click
4.Luminous area
5.Anti-slip foot mat
6.Mode indicator light
7.Mode Switch Button
8.Optical sensor
9.Power switch
10.(2.4G) Receiver

BLUETOOTH CONNECTION METHOD

1.Turn on the power switch;
2.Click the mode switch button at the bottom of the mouse, and the corresponding indicator light will light up (blue light/green light).;
3.Turn on the Bluetooth of your computer or other device, search for or select "BT3.0 Mouse" Or "BT5.2 Mouse", start Bluetooth pairing and complete the connection

英语

Force pairing:
When the mouse is in the Bluetooth channel, long press the bottom mode button for 5 seconds.The BT status light enters the flashing mode. At this point, you can re-enable the device's BT and proceed with the connection

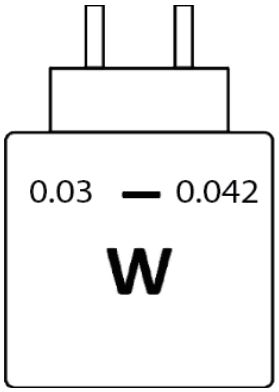

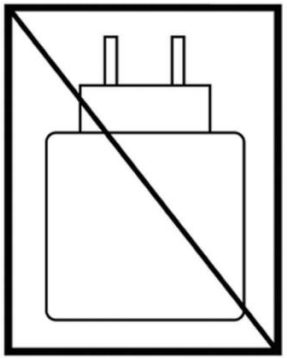

FCC Caution:

This device complies with part 15 of the FCC Rules. Operation is subject to the following two conditions: (1) This device may not cause harmful interference, and (2) this device must accept any interference received, including interference that may cause undesired operation.

Any changes or modifications not expressly approved by the party responsible for compliance could void the user's authority to operate the equipment.

NOTE: This equipment has been tested and found to comply with the limits for a Class B digital device, pursuant to Part 15 of the FCC Rules. These limits are designed to provide reasonable protection against harmful interference in a residential installation. This equipment generates, uses and can radiate radio frequency energy and, if not installed and used in accordance with the instructions, may cause harmful interference to radio communications. However, there is no guarantee that interference will not occur in a particular installation.

If this equipment does cause harmful interference to radio or television reception,
which can be determined by turning the equipment off and on, the user is encouraged to try to correct the interference by one or more of the following measures:

-- Reorient or relocate the receiving antenna.
-- Increase the separation between the equipment and receiver.
-- Connect the equipment into an outlet on a circuit different from that to which the receiver is connected.
-- Consult the dealer or an experienced radio/TV technician for help.

The device has been evaluated to meet general RF exposure requirement. The device can be used in portable exposure condition without restriction.