FCC CERTIFICATION TEST REPORT

Project Number	**: EA2108C-070**
Test Report Number	**: TR-W2109-002**
Type of Equipment	**: RFID MODULE**
Model Name	**: RFID-100**
FCC ID	**: 2AXLI-RFID-100**
Multiple Model Name	**: N/A**
Applicant	**: KT&C CO., LTD.**
Address	**: KT&C BLDG, 7, Yangcheon-ro 11-gil, Gangseo-gu, Seoul, Republic of Korea**
Manufacturer	**: KT&C CO., LTD.**
Address	**: KT&C BLDG, 7, Yangcheon-ro 11-gil, Gangseo-gu, Seoul, Republic of Korea**
Regulation	**: FCC Part 15 Subpart C Section 15.225**
Total page of Report	**: 21 Pages**
Date of Receipt	**: 2021-08-20**
Date of Issue	**: 2021-09-07**
Test Result	**: PASS**

This test report only contains the result of a single test of the sample supplied for the examination.
It is not a generally valid assessment of the features of the respective products of the mass-production.

Prepared by Song, In-yong / Senior Engineer _____ 2021-09-07
Signature Date

Reviewed by Choi, Yeong-min / Technical Manager _____ 2021-09-07
Signature Date

ENG Co., Ltd. 135-60 Gyeongchung-daero, Gonjiam-eup, Gwangju-si, Gyeonggi-do, Korea 464-942 Report Form_01 (Rev.2)
TEL: +82-31-727-8300 FAX: +82-31-746-0800 http://www.the-eng.co.kr

CONTENTS

Page

1. TEST SUMMARY 4
1.1 REGULATIONS AND RESULTS 4
1.2 PURPOSE OF THE TEST 4
1.3 TEST METHODOLOGY 4
1.4 ADDITIONS, DEVIATIONS, EXCLUSIONS FROM STANDARDS 4
2. EUT (EQUIPMENT UNDER TEST) INFORMATION 6
2.1 GENERAL DESCRIPTION 6
2.2 ADDITIONAL MODEL 6
3. TEST CONDITION 7
3.1 EQUIPMENT USED DURING TEST 7
3.2 MODE OF OPERATION DURING THE TEST 7
3.3 PRELIMINARY TESTING FOR WORST CASE CONFIGURATION 7
3.4 TEST SETUP DRAWING 8
3.5 EUT MODIFICATIONS 8
4. ANTENNA REQUIREMENT 9
4.1 CONCLUSION 9
5. TEST RESULT 10
5.1 RADIATED EMISSIONS 10
5.2 20 DB BANDWIDTH 16
5.3 FREQUENCY TOLERANCE OF CARRIER SIGNAL 17
5.4 AC POWER LINE CONDUCTED EMISSION 18
APPENDIX I – TEST INSTRUMENTATION 21

ENG Co., Ltd. 135-60 Gyeongchung-daero, Gonjiam-eup, Gwangju-si, Gyeonggi-do, Korea 464-942

TEL: +82-31-727-8300 FAX: +82-31-746-0800 http://www.the-eng.co.kr

Release Control Record

Issue Report No.	Issued Date	Details/Revisions
TR-W2109-002	2021-09-07	Initial Release
-	-	-

ENG Co., Ltd. 135-60 Gyeongchung-daero, Gonjiam-eup, Gwangju-si, Gyeonggi-do, Korea 464-942

TEL: +82-31-727-8300 FAX: +82-31-746-0800 http://www.the-eng.co.kr

1. TEST SUMMARY

1.1 Regulations and results

The sample submitted for evaluation (Referred to below as the EUT) has been tested in accordance with the following regulations or standards.

FCC Reference Section	Description	Result			
		P	F	N.T.	Note
15.205, 15.209(a) & 15.225(d)	Radiated Spurious Emissions	P			
15.207	AC Power-line Conducted Emissions	P			
15.225(a)	Field strength within the band (13.553-13.567) MHz	P			
15.225(b) & 15.225(c)	Field strength within the band (13.410-13.553) MHz and (13.567-13.710) MHz, (13.110-13.410) MHz and (13.710-14.010) MHz	P			
15.225(e)	Frequency Tolerance of Carrier Signal	P			
15.215	20 dB Bandwidth	P			

Remark:
P means Passed F means Failed N.T. means Not Tested

1.2 Purpose of the test

To determine whether the equipment under test fulfills the requirements of the regulation stated in FCC Part 15 Subpart C Section 15.225.

1.3 Test Methodology

The tests mentioned in clause 1.1 in this test report were performed according to FCC CFR 47 Part 2, CFR 47 Part 15, ANSI C63.10-2013.

1.4 Additions, deviations, exclusions from standards

No additions, deviations or exclusions have been made from standard.

1.5 Test Facility

The measurement facilities are located at 135-60 Gyeongchung-daero, Gonjiam-eup, Gwangju-si, Gyeonggi-do 12813, Korea. Our test facilities are accredited as a Conformity Assessment Body (CAB) by the FCC and ISED Canada, designated by the RRA (National Radio Research Agency), and accredited by KOLAS (Korea Laboratory Accreditation Scheme) in Korea and approved by TUV Rheinland, TUV SÜD and Korean Register of Shipping according to the requirement of ISO/IEC 17025.

Laboratory Qualification	Registration No.	Mark
FCC	KR0160	
ISED Canada	12721A	
RRA	KR0160	National Radio Research Agency
TUV Rheinland	UA 50314109-0002	TÜVRheinland
TUV SÜD	CARAT 094465 0004 Rev.00	
Korean Agency for Technology and Standards	KT733	
KOREAN REGISTER OF SHIPPING	PCT40841-TL001	

Remark. This report is not related to KOLAS accreditation and relevant regulation.

2. EUT (Equipment Under Test) INFORMATION

2.1 General Description

The KT&C CO., LTD., Model RFID-100 (referred to as the EUT in this report) is a RFID MODULE. The EUT is a device for transferring RFID (13.56 MHz) signal to an RFID TAG through wireless communication.

The product specification described herein was obtained from product data sheet or user's manual.

Kind of Class	DXX- Part 15 Low Power Communication Device Transmitter
Operating Frequency	RFID: 13.56 MHz
Modulation Types	ASK
Generated or used Freq. in EUT	13.56 MHz
Type of Antenna	■ Integrated Type ☐ Dedicated Type
	PCB Pattern Antenna
Operating Temperature	-10 °C ~ + 50 °C
Normal Test Voltage	DC 5.0 V
Electrical Rating	DC 5.0 V
External Port(s)	N/A
Test SW Version	N/A
Software Version	V1.1
Hardware Version	REV.0

2.2 Additional Model

None

3. TEST CONDITION

3.1 Equipment Used During Test

The following peripheral devices and/or interface cables were connected during the measurement:

Description	Model No.	FCC ID	Serial No.	Manufacturer.
RFID MODULE (EUT)	RFID-100	2AXLI-RFID-100	N/A	KT&C CO., LTD.
Notebook PC	15s-du0069TU	DoC	CND9503W22	HP
Notebook PC Adapter	TPN-CA14	DoC	HU10436-18165	Chicony Power Technology (Chongqing) Co., Ltd.

3.2 Mode of operation during the test

For continuous transmitting un-modulation signal, just input the DC voltage in EUT according to the manufacturer's guidance.

For continuous transmitting modulated signal, input the DC voltage in EUT and then contacts RFID tag card, according to the manufacturer's guidance. The used modulation type for the testing is ASK (13.56 MHz)

3.3 Preliminary Testing for Worst case configuration

For finding worst case configuration and operating mode, preliminary testing was performed and radiated emission and conducted emission tests were performed with the EUT set to transmit and receive at the channel with the highest output power as worst case scenario. All spurious emission tests were performed in X, Y and Z axis direction. And the worst X-axis (9 kHz ~ 30 MHz), Y-axis (30 MHz ~ 1 GHz) test condition was recorded in this test report.

Based on preliminary testing following operating modes were selected for the final test as listed below.

3.3.1 Test Channel and Frequency

Test Channel	Channel	Frequency
Center Channel	-	13.56 MHz

ENG Co., Ltd. 135-60 Gyeongchung-daero, Gonjiam-eup, Gwangju-si, Gyeonggi-do, Korea 464-942 Report Form_01 (Rev.2)
TEL: +82-31-727-8300 FAX: +82-31-746-0800 http://www.the-eng.co.kr

3.4 Test Setup Drawing

(Radiated Test below 30 MHz)

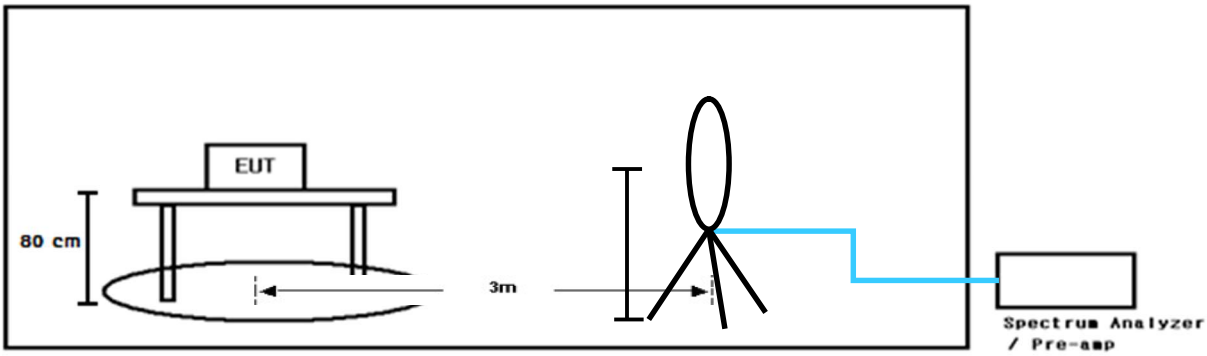

(Radiated Test below 1 GHz)

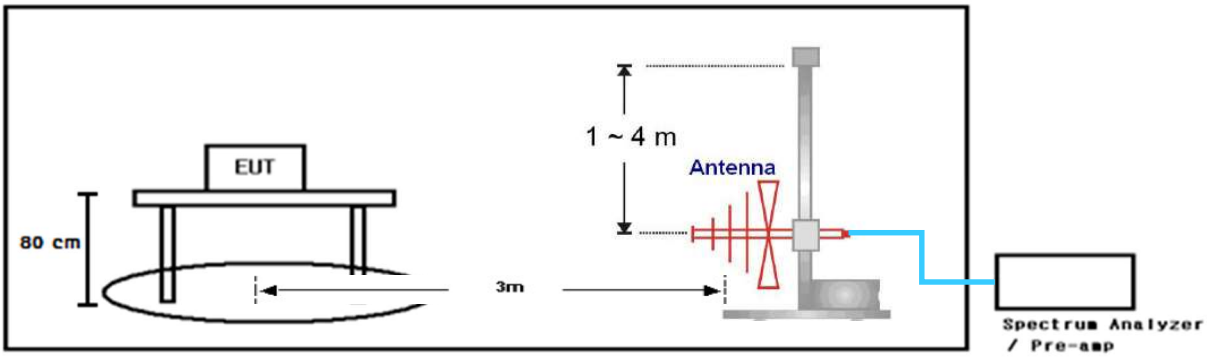

(Frequency Tolerance of Carrier Signal Test)

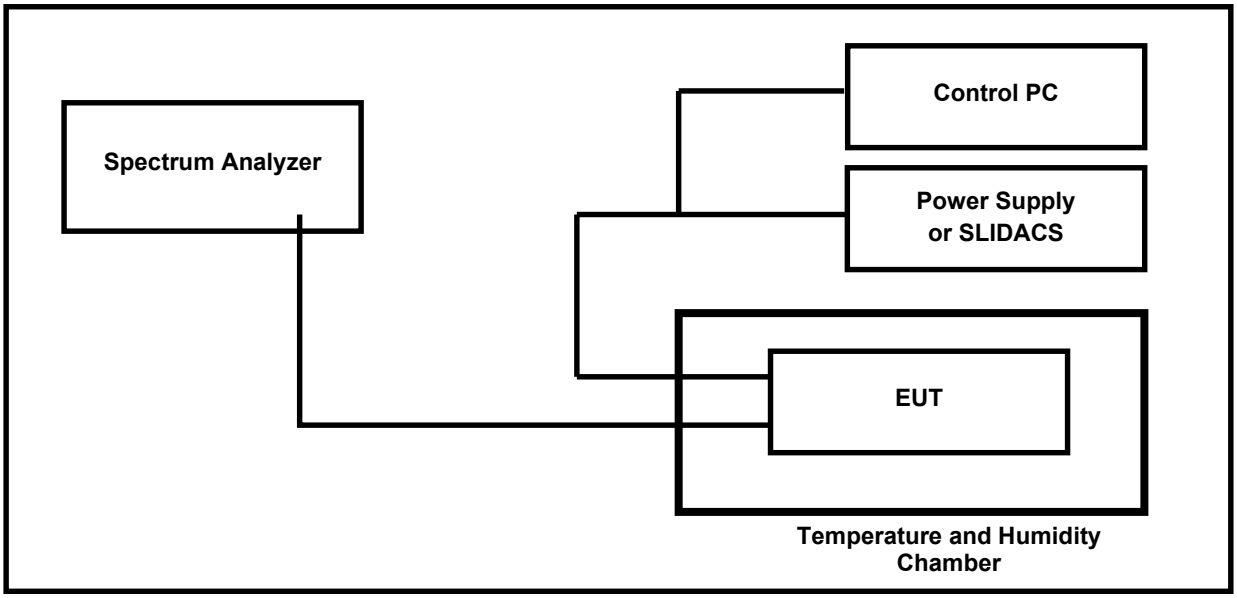

3.5 EUT Modifications

- No EMC Relevant Modifications were performed by this test laboratory.

4. ANTENNA REQUIREMENT

According to FCC CFR 47 Part 15 section 15.203, an intentional radiator shall be designed to ensure that no antenna other than that furnished by the responsible party shall be used with the device. The use of a permanently attached antenna or of an antenna that uses a unique coupling to the intentional radiator shall be considered sufficient to comply with the provision of this section. The manufacturer may design the unit so that the user can replace a broken antenna, but the use of a standard antenna jack or electrical connector is prohibited. This requirement does not apply to carrier current devices or to devices operated under the provisions of Sections 15.211, 15.213, 15.217, 15.219, or 15.221. Further, this requirement does not apply to intentional radiators that must be professionally installed, such as perimeter protection systems and some field disturbance sensors, or to other intentional radiators which, in accordance with Section 15.31 (d), must be measured at the installation site. However, the installer shall be responsible for ensuring that the proper antenna is employed so that the limits in this Part are not exceeded.

4.1 Conclusion

The EUT has an integral PCB loop antenna, so there is no consideration of replacement by the user.

ENG Co., Ltd. 135-60 Gyeongchung-daero, Gonjiam-eup, Gwangju-si, Gyeonggi-do, Korea 464-942 Report Form_01 (Rev.2)
TEL: +82-31-727-8300 FAX: +82-31-746-0800 http://www.the-eng.co.kr

5. TEST RESULT

5.1 Radiated emissions

5.1.1 Regulation

Acc. to section 15.225, and 15.209, following table shall be applied.

Frequency (MHz)	Field strength limit (μV/m) @ 30 m	Field strength limit (dBμV/m) @ 30 m	Field strength limit (dBμV/m) @ 3 m
13.110 – 13.410	106	40.5	80.5
13.410 – 13.553	334	50.5	90.5
13.553 – 13.567	15,848	84.0	124.0
13.567 – 13.710	334	50.5	90.5
13.710 – 14.010	106	40.5	80.5

Frequency (MHz)	Field strength limit (μV/m)	Field strength limit (dBμV/m)	Measurement Distance (m)
0.009 – 0.490	2400/F (kHz) = 266.7 – 4.9	48.5 – 13.8	300
0.490 – 1.705	24000/F (kHz) = 49.0 – 14.1	33.8 - 23.0	30
1.705 – 30.0	30	29.5	30
30 – 88	100	40.0	3
88 - 216	150	43.5	3
216 - 960	200	46.0	3
Above 960	500	54.0	3

Note: The emission limits shown in the above table are based on measurement instrumentation employing a CISPR quasi-peak detector. For the frequency bands (9 – 90) kHz, (110 – 490) kHz and above 1000 MHz, the radiated emission limits are based on measurements employing an average detector.

5.1.2 Method of Measurement

The preliminary radiated emission test was performed using the procedure in ANSI C63.10 2013 to determine the worse operating conditions. The radiated emissions measurements were performed on the 10 m Semi Anechoic Chamber

Radiated Emissions Test, 9 kHz to 30 MHz (Magnetic Field Test)

For frequencies from 150 kHz to 30 MHz measurements were made of the magnetic H field. The EUT was placed on the top of the 0.8-meter height, 1 × 1.5 meter non-metallic table. The measuring antenna is an electrically screened loop antenna. Emissions from the EUT are maximized by adjusting the orientation of the Loop antenna and rotating the EUT on the turntable. Manipulating the system cables also maximizes EUT emissions if applicable. The test-receiver system was set up to average, peak, and quasi-peak detector function with specified bandwidth.

Radiated Emissions Test, below 1 000 MHz

The frequency spectrum from 30 MHz to 1 000 MHz was scanned and maximum emission levels maximized at each frequency recorded. The system rotated 360°, and the antenna was varied in the height between 1.0 m and 4.0 m in order to determine the maximum emission levels. This procedure was performed for both horizontal and vertical polarization of the receiving antenna. The EUT is situated in three orthogonal planes (if appropriate).

5.1.3 Test Site Requirement for KDB 414788 D01

Acc. to KDB 414788 D01 Radiated Test Site v01r01, Semi Anechoic Chamber (SAC) shall be verified test results below 30 MHz with Open Area Test Site (OATS), so we compared test results between the measurements from our SAC and an OATS and found test results almost same, so we ***declare test result for below 30 MHz from our SAC is valid and met the requirement acc. to KDB 414788 D01 Radiated Test Site v01r01***.

5.1.4 Measurement Uncertainty

Measurement uncertainties were not taken into account and following uncertainty levels have been estimated for tests performed on the apparatus. The measurement uncertainties are given with at least 95 % confidence.

Frequency Range	Uncertainty	Frequency Range	Uncertainty
9 kHz ~ 30 MHz	±2.85 dB	30 MHz ~ 1 GHz	±4.30 dB

5.1.5 Sample Calculated Example

At 80 MHz Limit = 40.0 dBuV/m

Result(dBuV/m) = Receiver Reading (dBuV) + Antenna Factor (dB/m) - Corr. Factor (dB) =30

Where, Corr. Factor (dB) = Pre-amplifier (dB) – Cable loss (dB)

Margin = Limit – Result = 40 – 30 = 10 so the EUT has 10.0 dB margin at 80 MHz

5.1.6 Test Data

Date of Test	2021-09-03	Temperature	(23.60 ± 0.05) °C
		Relative humidity	(55.80 ± 0.05) % R.H.
Measurement Frequency Range		9 kHz ~ 1 GHz	
Test Result	***PASS***	Tested By	Do-heon Kim

Frequency range	Detector Mode	Resolution BW	Video BW	Video Filtering	Measurement distance
Below 30 MHz	Peak or Q.P.	9 kHz	30 kHz	-	3 m
30 MHz ~ 1 000 MHz	Peak or Q.P.	100 kHz	300 kHz	-	3 m

5.1.6.1 Test Data below 30 MHz

Graphical Test Data – Below 30 MHz

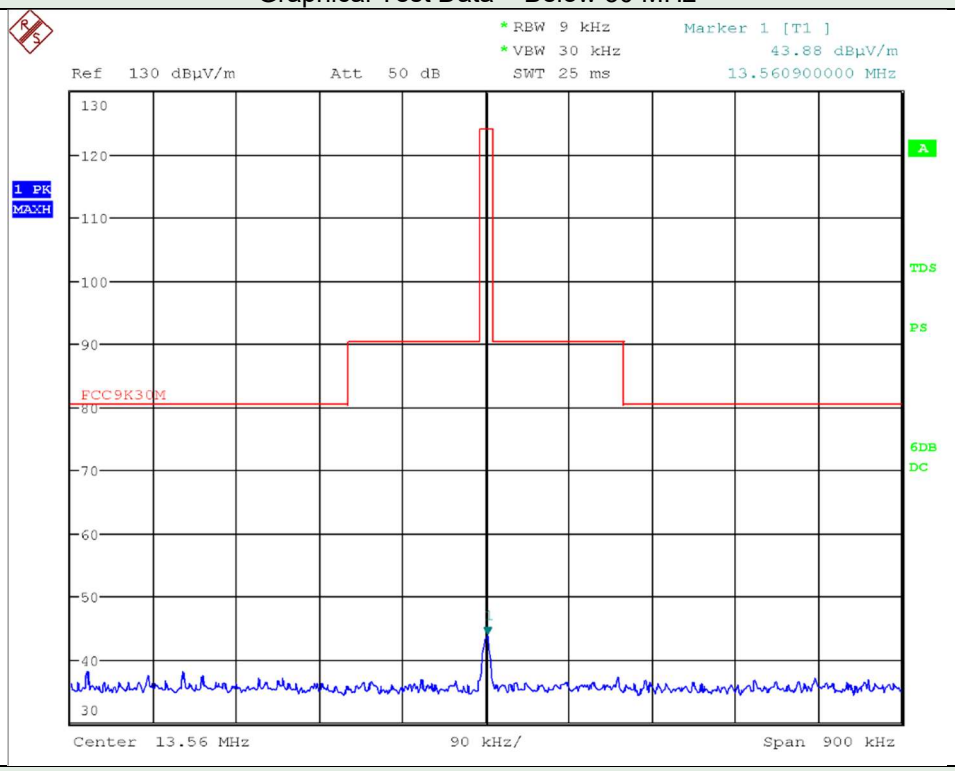

Tabulated Test Data under 15.225(a), (b)&(c)

Frequency (MHz)	Detector Mode	Pol.	Result (dBuV/m)	Limit (dBuV/m)	Margin (dB)	Height (cm)	Azimuth (Degree)
13.56	Peak	V	43.88	124.00	80.12	0	0

Graphical Test Data – Below 30 MHz

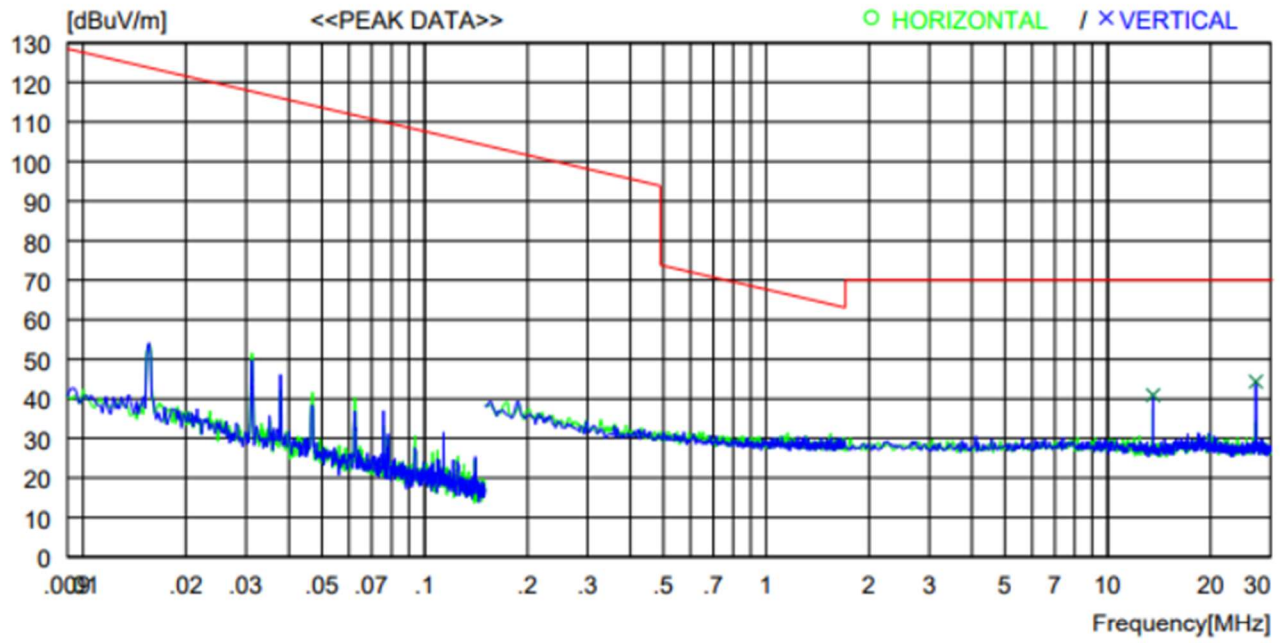

No.	FREQ [MHz]	READING PEAK [dBuV]	ANT FACTOR [dB]	LOSS [dB]	GAIN [dB]	RESULT [dBuV/m]	LIMIT [dBuV/m]	MARGIN [dB]	ANTENNA [cm]	TABLE [DEG]
----- Vertical ------										
1	13.561	53.0	19.8	0.8	32.7	40.9	70.0	29.1	0	0
2	27.142	55.9	19.9	1.2	32.7	44.3	70.0	25.7	0	0

Tabulated Test Data under 15.225(d), 15.209

Frequency (MHz)	Receiver Reading (dBuV)	Detector Mode	Pol.	Ant. Factor (dB/m)	Corr. Factor(dB)	Result (dBuV/m)	Limit (dBuV/m)	Margin (dB)	Height (cm)	Azimuth (Degree)

* Spurious emissions that 20 dB below the limits didn't be recorded

ENG Co., Ltd. 135-60 Gyeongchung-daero, Gonjiam-eup, Gwangju-si, Gyeonggi-do, Korea 464-942 Report Form_01 (Rev.2)
TEL: +82-31-727-8300 FAX: +82-31-746-0800 http://www.the-eng.co.kr

5.1.6.2 Test Data from 30 MHz to 1 GHz_Graphical Test Data

Graphical Test Data – Below 1 000 MHz (Peak)

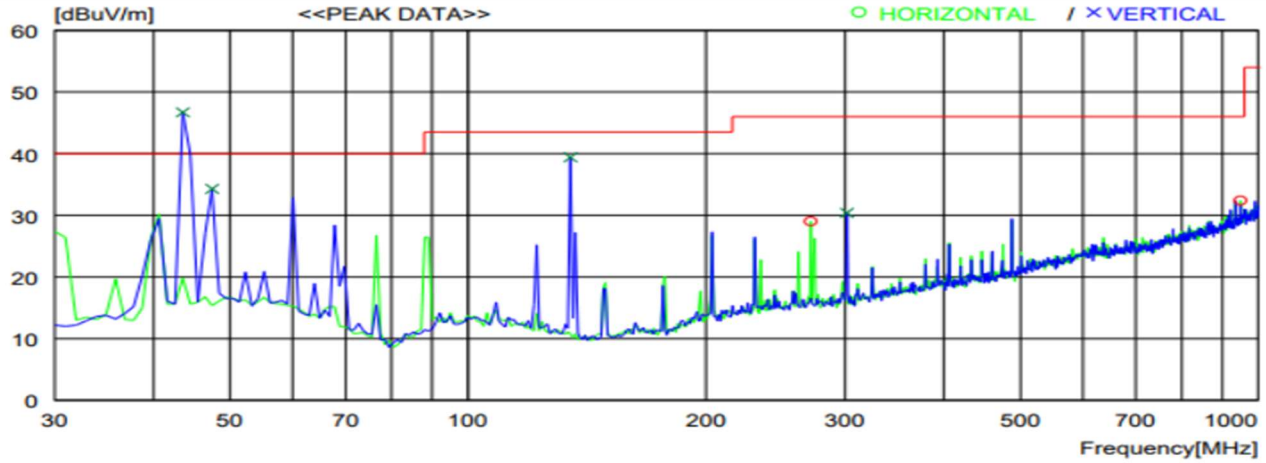

No.	FREQ [MHz]	READING PEAK [dBuV]	ANT FACTOR [dB]	LOSS [dB]	GAIN [dB]	RESULT [dBuV/m]	LIMIT [dBuV/m]	MARGIN [dB]	ANTENNA [cm]	TABLE [DEG]
----- Horizontal ------										
1	271.530	39.3	12.8	9.6	32.7	29.0	46.0	17	100	0
2	949.547	29.0	22.3	13.1	32.0	32.4	46.0	13.6	100	359
----- Vertical ------										
3	43.580	58.2	13.9	7.3	32.7	46.7	40.0	-6.7	100	0
4	47.460	45.4	14.3	7.3	32.7	34.3	40.0	5.7	100	0
5	134.760	55.3	8.3	8.5	32.7	39.4	43.5	4.1	100	146
6	301.600	40.0	13.3	9.8	32.7	30.4	46.0	15.6	100	3

Graphical Test Data – Below 1 000 MHz (Quasi Peak)

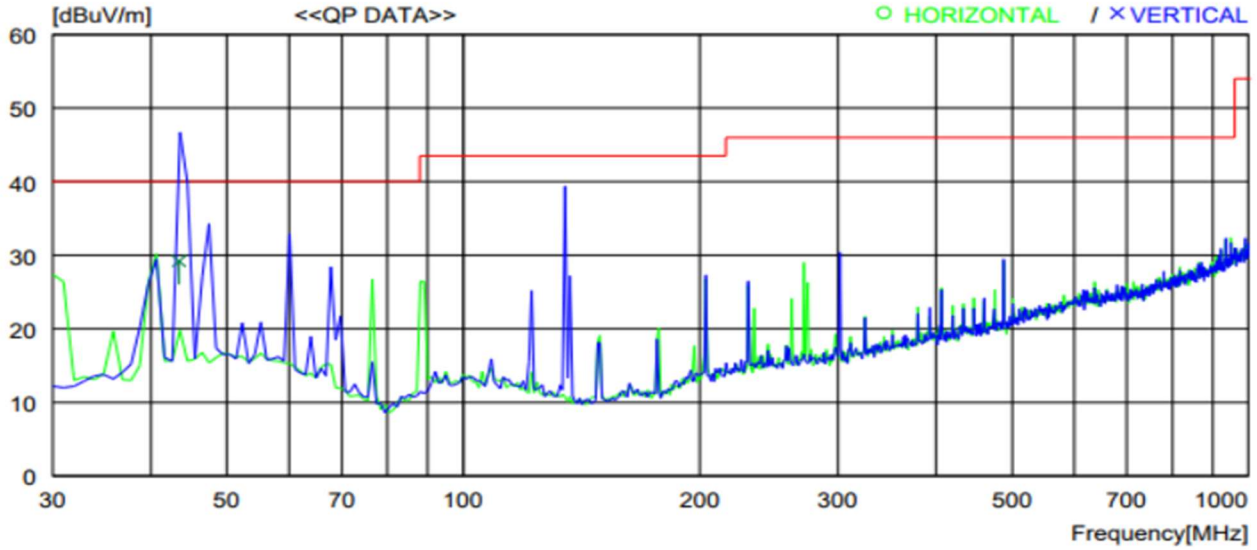

No.	FREQ [MHz]	READING QP [dBuV]	ANT FACTOR [dB]	LOSS [dB]	GAIN [dB]	RESULT [dBuV/m]	LIMIT [dBuV/m]	MARGIN [dB]	ANTENNA [cm]	TABLE [DEG]
----- Vertical ------										
1	43.440	40.8	13.8	7.3	32.7	29.2	40.0	10.8	100	0

5.1.6.3 Test Data from 30 MHz to 1 GHz_Tabulated Test Data

Tabulated Test Data under 15.225(d), and 15.209										
Frequency (MHz)	Receiver Reading (dBuV)	Detector Mode	Pol.	Ant. Factor (dB/m)	Corr. Factor(dB)	Result (dBuV/m)	Limit (dBuV/m)	Margin (dB)	Height (cm)	Azimuth (Degree)
43.580	40.8	Q-Peak	V	13.8	25.4	29.2	40.0	10.8	100	0
47.460	45.4	Peak	V	14.3	25.4	34.3	40.0	5.7	100	0
134.760	55.3	Peak	V	8.3	24.2	39.4	43.5	4.1	100	146
271.530	39.3	Peak	H	12.8	23.1	29.0	46.0	17.0	100	0
301.600	40.0	Peak	V	13.3	22.9	30.4	46.0	15.6	100	3
949.547	29.0	Peak	H	22.3	18.9	32.4	46.0	13.6	100	359

5.2 20 dB bandwidth

5.2.1 Method of Measurement

The antenna output of the EUT was connected to the spectrum analyzer. The resolution is set to 30 kHz, and peak detection was used. The 20 dB bandwidth is defined as the total spectrum over which the power is higher than the peak power minus 20 dB.

5.2.2 Test Data

Date of Test	2021-09-03	Temperature	(25.90 ± 0.87) °C
		Relative humidity	(54.10 ± 2.23) % R.H.
Test Result	***PASS***	Tested by	Do-heon Kim

Operating Frequency (MHz)	Measured Value (MHz)	Limit
13.56	13.412	F_L > 13.110 MHz
	13.794	F_H < 14.010 MHz

20 dB bandwidth measurement plot

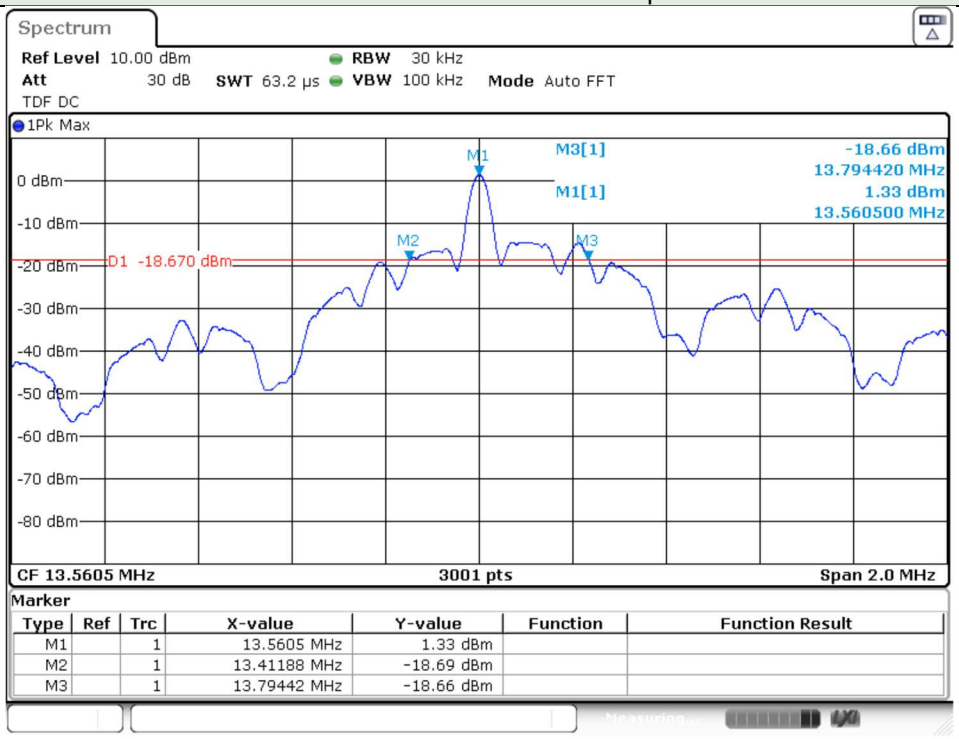

Note: F_L : Lowest frequency at 20 dB bandwidth

F_H : Highest frequency at 20 dB bandwidth

ENG Co., Ltd. 135-60 Gyeongchung-daero, Gonjiam-eup, Gwangju-si, Gyeonggi-do, Korea 464-942 Report Form_01 (Rev.2)
TEL: +82-31-727-8300 FAX: +82-31-746-0800 http://www.the-eng.co.kr

5.3 Frequency tolerance of carrier signal

5.3.1 Regulation

FCC 47CFR15-15.225(e)

The frequency tolerance of the carrier signal shall be maintained within +/- 0.01% of the operating frequency over a temperature variation of –20 degrees to +50 degrees C at normal supply voltage, and for a variation in the primary supply voltage from 85% to 115% of the rated supply voltage at a temperature of 20 degrees C. For battery-operated equipment, the equipment tests shall be performed using a new battery.

5.3.2 Method of Measurement

The EUT output was connected to the spectrum analyzer through an attenuator. Turn EUT off and set chamber temperature to -20 °C and then allow sufficient time (approximately 20 to 30 minutes after chamber reach the assigned temperature) for EUT to stabilize. Turn on EUT and measured EUT operating frequency and turn off the EUT after the measurement. The temperature was raised 10 °C step from -20 °C to +50 °C. Repeat above method for frequency measurement every 10 °C step and then record all measured frequencies on each temperature step. An external DC power supply was connected to the input of the EUT. The voltage of EUT set to 115 % of the nominal value and then was reduced to 85 % of nominal voltage. The output frequency was recorded at each step.

5.3.3 Test Data

Date of Test	2021-09-03	Temperature	(25.90 ± 0.87) °C
		Relative humidity	(54.10 ± 2.23) % R.H.
Test Result	***PASS***	Tested by	Do-heon Kim

Carrier Frequency: 13.560 000 MHz, ***LIMIT: within ± 1 356 Hz***

Temp. (°C)	Volt. (V)	Carrier Frequency Measured with Time Elapsed							
		Start Up		2 minutes		5 minutes		10 minutes	
		(MHz)	Dif* (Hz)	(MHz)	Dif* (Hz)	(MHz)	Dif* (Hz)	(MHz)	Dif* (Hz)
+50	5.00	13.560 432	432	13.560 423	423	13.560 423	423	13.560 423	423
+40	5.00	13.560 465	465	13.560 457	457	13.560 457	457	13560 457	457
+30	5.00	13.560 515	515	13.560 503	503	13.560 502	502	13.560 502	502
+20	5.75	13.560 548	548	13.560 542	542	13.560 542	542	13.560 542	542
	5.00	13.560 550	550	13.560 548	548	13.560 548	548	13.560 548	548
	4.25	13.560 563	563	13.560 549	549	13.560 553	553	13.560 553	553
+10	6.00	13.560 594	594	13.560 586	586	13.560 586	586	13.560 586	586
0	6.00	13.560 612	612	13.560 610	610	13.560 610	610	13.560 610	610
-10	6.00	13.560 609	609	13.560 613	613	13.560 613	613	13.560 613	613
-20	6.00	13.560 585	585	13.560 588	588	13.560 588	588	13.560 588	588

* Dif means Difference.

5.4 AC Power Line Conducted Emission

5.4.1 Limit

Acc. to section 15.207 (a), following table shall be applied.

Frequency Range (MHz)	Quasi-Peak (dBuV)	Average (dBuV)
0.15 - 0.5	66 to 56	56 to 46
0.5 - 5	56	46
5 -30	60	50

5.4.2 Method of Measurement

The EUT was placed on a wooden table, 0.8 m height above the horizontal ground plane and 40 cm from the vertical ground plane. Power was fed to the EUT through a 50 Ω / 50 μH + 5 Ω Artificial Mains Network (AMN). The ground plane was electrically bonded to the reference ground system and all power lines were filtered from ambient.

The receiver is set to a resolution bandwidth of 9 kHz. Peak detection is used unless otherwise noted as quasi-peak or average.

The test was performed for both Neutral and Hot lines.

5.4.3 Measurement Uncertainty

Measurement uncertainties were not taken into account and following uncertainty levels have been estimated for tests performed on the apparatus. The measurement uncertainties are given with at least 95 % confidence.

Frequency Range	Uncertainty
150 kHz ~ 30 MHz	± 2.17 dB

5.4.4 Sample Calculated Example

At 5.31 MHz QP Limit = 60.0 dBuV

Correction Factor (C. Factor) of LISN, Pulse Limiter and cable loss at 5.31 MHz = 9.7 dB

Q.P Reading from the Test receiver = 20.8 dBuV

(Calculated value for system losses by software EMC32 manufactured by Rohde & Schwarz)

Therefore Q.P Margin = 60 - 20.8 = 39.2 so the EUT has 39.2 dB margin at 5.31 MHz

ENG Co., Ltd. 135-60 Gyeongchung-daero, Gonjiam-eup, Gwangju-si, Gyeonggi-do, Korea 464-942 Report Form_01 (Rev.2)
TEL: +82-31-727-8300 FAX: +82-31-746-0800 http://www.the-eng.co.kr

5.4.5 Worst Case Test Data

Date of Test	2021-09-07	Temperature	(24.20 ± 0.05) °C
		Relative humidity	(61.80 ± 0.05) % R.H.
Measurement Frequency Range		150 kHz ~ 30MHz	
Test Result	***PASS***	Tested By	Do-heon Kim

Hot Line

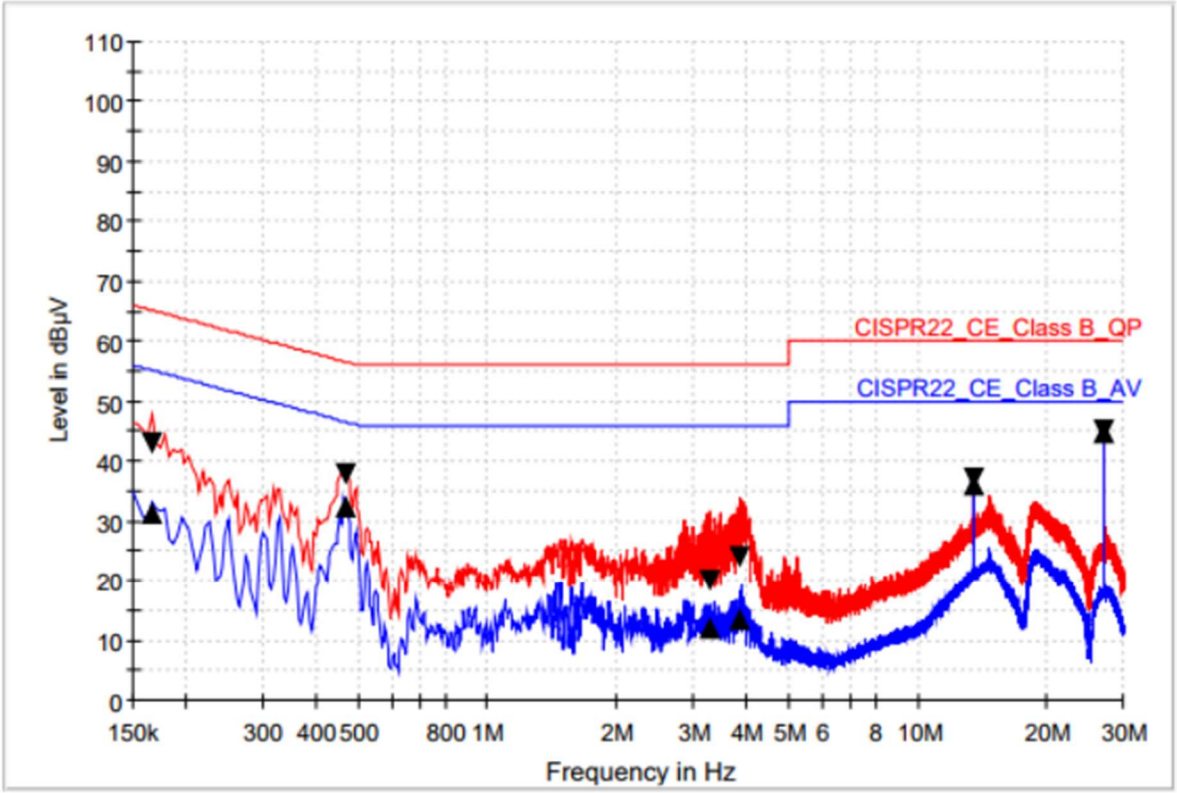

Limit and Margin1

Frequency (MHz)	QuasiPeak (dBµV)	CAverage (dBµV)	Bandwidth (kHz)	Line	Corr. (dB)	Margin - QPK (dB)	Limit - QPK (dBµV)	Margin - CAV (dB)	Limit - CAV (dBµV)
0.166000	43.0	31.3	9.000	L1	9.6	22.2	65.2	23.8	55.2
0.470000	37.7	32.4	9.000	L1	9.6	18.8	56.5	14.1	46.5
3.278000	19.9	12.1	9.000	L1	9.7	36.1	56.0	33.9	46.0
3.866000	23.9	13.4	9.000	L1	9.7	32.1	56.0	32.6	46.0
13.562000	37.2	36.1	9.000	L1	9.9	22.8	60.0	13.9	50.0
27.122000	45.0	44.9	9.000	L1	10.2	15.0	60.0	5.1	50.0

Neutral Line

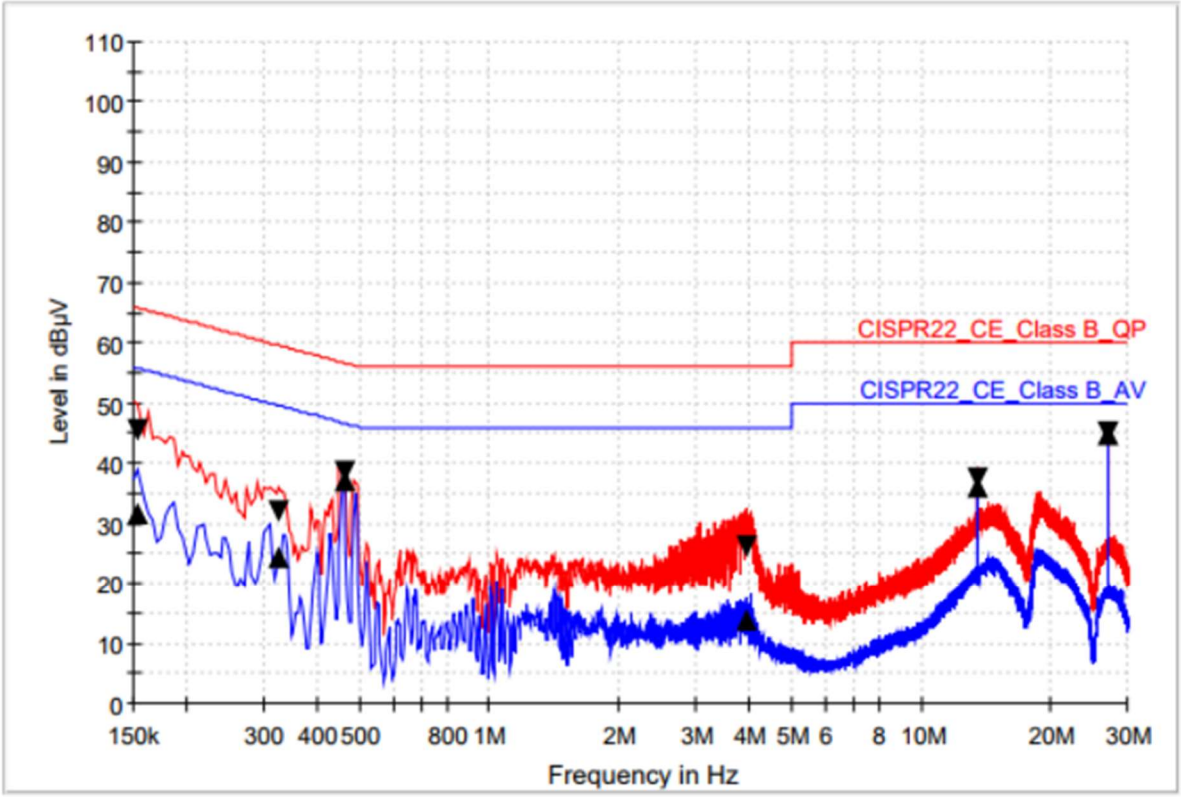

Limit and Margin1

Frequency (MHz)	QuasiPeak (dBµV)	CAverage (dBµV)	Bandwidth (kHz)	Line	Corr. (dB)	Margin - QPK (dB)	Limit - QPK (dBµV)	Margin - CAV (dB)	Limit - CAV (dBµV)
0.154000	45.4	31.7	9.000	N	9.6	20.4	65.8	24.1	55.8
0.326000	31.9	24.2	9.000	N	9.6	27.6	59.6	25.3	49.6
0.462000	38.7	37.3	9.000	N	9.6	18.0	56.7	9.4	46.7
3.938000	26.3	13.8	9.000	N	9.7	29.7	56.0	32.2	46.0
13.562000	37.5	36.2	9.000	N	9.9	22.5	60.0	13.8	50.0
27.122000	45.1	44.9	9.000	N	10.2	14.9	60.0	5.1	50.0

ENG Co., Ltd. 135-60 Gyeongchung-daero, Gonjiam-eup, Gwangju-si, Gyeonggi-do, Korea 464-942

TEL: +82-31-727-8300 FAX: +82-31-746-0800 http://www.the-eng.co.kr

Appendix I – Test Instrumentation

Description	Model No.	Serial No.	Manufacturer.	Due for Cal. Date	Cal. Interval
Signal Analyzer	FSV 13	101243	Rohde & Schwarz	2022-01-14	1 Y
Attenuator	10 dB	ENG-1	Rohde & Schwarz	2022-01-14	1 Y
DC Power Supply	U8001A	MY51080019	Agilent	2022-07-16	1 Y
Test Receiver	ESU 26	100303	Rohde & Schwarz	2022-01-14	1 Y
Loop Antenna	HFH2-Z2	100341	Rohde & Schwarz	2021-06-21	2 Y
TRILOG Broadband Antenna	VULB9163	9163.799	Schwarzbeck	2021-09-17	2 Y
Attenuator	6dB	272.4110.50	Rohde & Schwarz	2022-01-14	1 Y
Pre-Amplifier	310N	344015	Sonoma Instrument	2022-01-14	1 Y
Turn Table	DT3000-3t	1310814	INNCO SYSTEM	N/A	N/A
Antenna Master	MA4000-EP	4600814	INNCO SYSTEM	N/A	N/A
Camera Controller	HDCon4102	6531445048	PONTIS	N/A	N/A
CO3000 Controller	Co3000-4Port	CO3000/806/ 34130814/L	INNCO SYSTEM	N/A	N/A
Test Receiver	ESCI 7	100722	Rohde & Schwarz	2022-01-14	1 Y
LISN	ENV216	100110	Rohde & Schwarz	2022-01-14	1 Y

The measuring equipment utilized to perform the tests documented in this test report has been calibrated in accordance with manufacturer's recommendations, and is traceable to recognized national standards.