USER MANUAL

EN DE FR ES IT JP

Model:U6

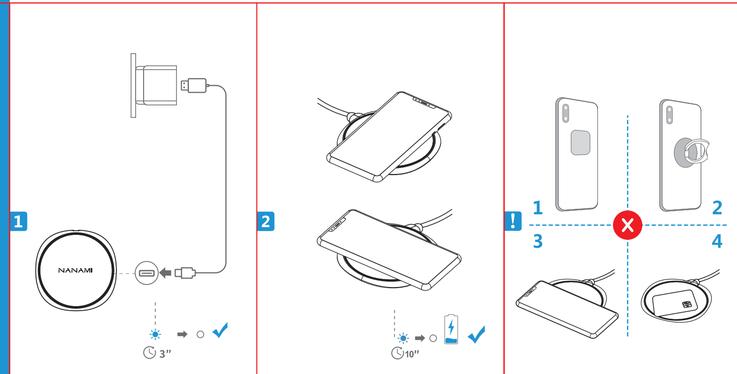

EN

Working Status	LED Indicator
Connected to power	☀ 🕒 3″ ➡ ○
Standby	○
On charging	☀ 🕒 10″ ➡ ○
Fully Charged	○
1. Metal or abnormal temperature detected 2. Using a non-Quick Charge Wall Charger	☀

For the fast and safe charge, using a Quick Charge 2.0 or 3.0 Wall Charger is highly recommended. Other Chargers may not work well with this device.

Attentions

- Please keep the charger away from water or other liquids.
- Do not place the charger too close to any magnetic stripe or clip card (ID card, bank cards, etc.) to avoid magnetic failure.
- This item is not to be used on any mobile device with metal plates, as it will cause extreme heat that may burn and / or damage the device.
- Fast charge via the plug and USB charging cable (both support QC 2.0 or QC 3.0).
- Usually we recommend that the thickness of phone case should be within 3 mm (0.12 inch). It would not charge if the thickness is more than 5 mm (0.19 inch).
- The standard temperature of wireless charger QI is 130 °F, but the temperature of our products should be controlled within 113 °F. The charger will cut off current when abnormal heating occurs. Please contact us if any damage occurs.
- We recommend that you turn off the power-consumption software before charging to effectively prevent the phone from overheating. When the temperature exceeds 113 °F during charging, it is normal for the charging speed to slow down.

DE

Arbeits status	LED-Anzeiger
Verbunden mit Mach	☀ 🕒 3″ ➡ ○
Bereithalten	○
Aufladen	☀ 🕒 10″ ➡ ○
Voll aufgeladen	○
1. Metal oder abnormale Temperatur erkannt 2. Verwenden eines nicht-Schnellladе wandla degerätS	☀

Für die schnelle und sichere Ladung mit einer Quick Charge 2.0 oder 3.0 Wall Ladegerät wird dringend empfohlen. Andere Ladegeräte funktionieren möglicherweise nicht gut mit diesem Gerät.

Aufmerksamkeiten

- Bitte halten Sie das Ladegerät von Wasser oder anderen Flüssigkeiten fern.
- Platzieren Sie das Ladegerät nicht zu nah an Magnetstreifen- oder Clipkarten (ID-Karten, Bankkarten usw.), um magnetische Fehler zu vermeiden.
- Dieser Artikel darf nicht auf mobilen Geräten mit Metallplatten verwendet werden, da dies zu extremer Hitze führen kann, die das Gerät verbrennen und / oder beschädigen könnte.
- Fast charge via the plug and USB charging cable (both support QC 2.0 or QC 3.0).
- Normalerweise empfehlen wir, dass die Dicke des Telefongehäuses innerhalb von 3 mm (0.12 Zoll) sein sollte. Es würde nicht aufladen, wenn die Dicke mehr als 5 mm (0.19 Zoll) beträgt.
- Die Standardtemperatur des kabellosen Ladegerätes QI beträgt 130°F, aber die Temperatur unserer Produkte sollte innerhalb von 113°F gemeßt werden. Das Ladegerät schaltet den Strom aus, wenn eine ungewöhnliche Erwärmung auftritt. Bitte kontaktieren Sie uns, wenn ein Schaden auftritt.
- Wir empfehlen, dass Sie vor dem Laden die Software für den Stromverbrauch ausschalten, um eine Überhitzung des Telefons zu verhindern. Wenn die Temperatur während des Ladevorgangs 113°F überschreitet, ist es normal, dass sich die Ladegeschwindigkeit verlangsamt.

FR

Statut de travail	Indicateur LED
Connecter avec un circuit électrique	☀ 🕒 3″ ➡ ○
En veille	○
En charge	☀ 🕒 10″ ➡ ○
Complètement chargé	○
1. Métal ou température anormale détectée 2. Utilisation d'un chargeur mural non rapide	☀

Pour un chargement rapide et sûr, l'utilisation d'un chargeur mural de charge rapide 2.0 ou 3.0 est fortement recommandée. D'autres chargeurs peuvent ne pas fonctionner correctement avec cet appareil.

Remarques

- Veuillez garder le chargeur éloigné de l'eau ou d'autres liquides.
- Ne placez pas le chargeur trop près d'une bande magnétique ou d'une carte magnétique (carte d'identité, carte bancaire, etc.) pour éviter toute défaillance magnétique.
- Cet article ne doit pas être utilisé sur un appareil mobile muni de plaques métalliques, ya que pourrait provoquer un calor extrême que puede quemar y / o dañar el dispositivo.
- Charge rapide via le secteur adapteur et le câble de chargement USB (tous deux compatibles avec QC 2.0 ou QC 3.0).
- En général, nous recommandons que l'épaisseur du boîtier du téléphone soit inférieure à 3 mm (0.12 pouce). Il ne chargerait pas si l'épaisseur est supérieure à 5 mm (0.19 pouce).
- La température standard du chargeur sans fil QI est de 130 °F, mais la température de nos produits doit être contrôlée dans les 113 °F. Le chargeur coupe le courant en cas de chauffage anormal. S'il vous plaît nous contacter si des dommages surviennent.
- Nous vous recommandons de désactiver le logiciel d'alimentation avant de le charger pour empêcher le téléphone de surchauffer. Lorsque la température dépasse 113 °F pendant la charge, il est normal que la vitesse de charge ralentisse.

ES

Estado de Trabajo	LED Indicator
Indicador LED	☀ 🕒 3″ ➡ ○
Colocarse	○
Cargando	☀ 🕒 10″ ➡ ○
Completamente Cargado	○
1. Metal o temperatura anormal detectada 2. Uso de un cargador de pared de carga no rápida	☀

Para una carga rápida y segura, con Quick Charge 2.0 o 3.0 Wall Charger es muy recomendable. Es posible que otros cargadores no funcionen bien con este dispositivo

Atenciones

- Mantenga el cargador alejado del agua u otros líquidos.
- No coloque el cargador demasiado cerca de una banda magnética o tarjeta de clip (tarjeta de identificación, tarjetas bancarias, etc.) para evitar fallas magnéticas.
- Este artículo no debe usarse en ningún dispositivo móvil con placas metálicas, ya que puede provocar un calor extremo que puede quemar y / o dañar el dispositivo.
- Rápida carga a través del enchufe y el cable de carga USB (ambos son compatibles con QC 2.0 o QC 3.0).
- Usually we recommend that the thickness of phone case should be within 3 mm (0.12 inch). It would not charge if the thickness is more than 5 mm (0.19 inch).
- La temperatura estándar del cargador inalámbrico QI es de 130 °F, pero la temperatura de nuestros productos debe controlarse dentro de 113 °F. El cargador cortará la corriente cuando ocurra un calentamiento anormal. Por favor contáctenos si ocurre algún daño.
- Le recomendamos que apague el software de consumo de energía antes de cargar para evitar que el teléfono se sobrecalente. Cuando la temperatura supera los 113 ° C durante la carga, es normal que la velocidad de carga disminuya.

IT

Stato di Lavoro	Indicatore LED
Connesso al potere	☀ 🕒 3″ ➡ ○
Standby	○
In carica	☀ 🕒 10″ ➡ ○
Completamente carico	○
1. Metallo o temperatura anormale rilevata 2. Uso di un caricatore da muro a carica non rapida	☀

Per una ricarica rapida e sicura, si consiglia vivamente l'uso di caricabatterie da muro Quick Charge 2.0 o 3.0. Altri caricabatterie potrebbero non funzionare bene con questo dispositivo.

Attenzioni

- Si prega di tenere il caricabatterie lontano da acqua o altri liquidi.
- Non posizionare il caricatore troppo vicino a nessuna banda magnetica o scheda a clip (carta d'identità, carte bancarie, ecc.) Per evitare guasti magnetici.
- Questo articolo non deve essere utilizzato su alcun dispositivo mobile con piastre metalliche, in quanto potrebbe causare un calore estremo che potrebbe bruciare e / o danneggiare il dispositivo.
- Carica rapida tramite spina e cavo di ricarica USB (entrambi supportano QC 2.0 o QC 3.0).
- Raccomandiamo solitamente che lo spessore della cassa del telefono dovrebbe essere entro 3 millimetri (0.12 pollici). Non si carica se lo spessore è superiore a 5 mm (0.19 pollici).
- La temperatura standard del caricabatterie wireless Qi è 130 °F, ma la temperatura dei nostri prodotti deve essere controllata entro 113 °F. Il caricabatterie interrompe la corrente quando si verifica un riscaldamento anomalo. Vi preghiamo di contattarci se si verificano danni.
- Si consiglia di spegnere il software di consumo energetico prima della ricarica per impedire efficacemente il surriscaldamento del telefono. Quando la temperatura supera 113 °F durante la carica, è normale che la velocità di ricarica rallenti.

JP

充電状態	ランプの表示
電源に接続	☀ 🕒 3″ ➡ ○
待機状態	○
充電中	☀ 🕒 10″ ➡ ○
満充電	○
1. 金属または異常温度が検知された 2. QCアダプターを使用しているい	☀

迅速且つ安全な充電をするため、QC2.0/QC3.0のアダプターをご使用ください。上述以外のアダプターでは充電ができない恐れがあります。

安全上のご注意

- 水または他の液体が、本製品にかからないようにしてください。
- 電磁故障が発生する恐れがあるので、磁気ストライプカードに近いようクリップカードのなどに本製品を使用しないでください。
- 金属は充電の時に発熱を起こすので、金属製のハックスケッターなどをつけたまま充電する場合、製品が焼損・破損する恐れがあります。したがって、金属スケッカーを外してから充電してください。
- 急速充電をするため、QC2.0/QC3.0対応のケーブル及びアダプターが必要でございます。
- スマホケースを付けたまま充電する場合、3mm以内のケースをご使用するのがオススメです。ケース厚さが5mmを超えた場合、充電できない可能性があります。
- ワイヤレス充電器の温度標準は54.4℃（130℉）ですが、本製品では温度管理機能が搭載しており、充電の温度を43℃（113℉）以下に抑えております。もし異常温度が発生した場合、電源は自動的に切断されます。何か損害が発生する場合、弊社までご連絡ください。
- 充電時の過熱を防止するため、充電の前に電力消費の多いアプリを閉じてください。また、充電中に温度がおよそ各超えた場合に、充電速度が遅くなりますのでご注意ください。

FCC STATEMENT :

This device complies with Part 15 of the FCC Rules. Operation is subject to the following two conditions:
(1) This device may not cause harmful interference, and
(2) This device must accept any interference received, including interference that may cause undesired operation.
Warning: Changes or modifications not expressly approved by the party responsible for compliance could void the user's authority to operate the equipment.

NOTE: This equipment has been tested and found to comply with the limits for a Class B digital device, pursuant to Part 15 of the FCC Rules. These limits are designed to provide reasonable protection against harmful interference in a residential installation. This equipment generates uses and can radiate radio frequency energy and, if not installed and used in accordance with the instructions, may cause harmful interference to radio communications. However, there is no guarantee that interference will not occur in a particular installation. If this equipment does cause harmful interference to radio or television reception, which can be determined by turning the equipment off and on, the user is encouraged to try to correct the interference by one or more of the following measures:

Reorient or relocate the receiving antenna.

Increase the separation between the equipment and receiver.

Connect the equipment into an outlet on a circuit different from that to which the receiver is connected.

Consult the dealer or an experienced radio/TV technician for help.

FCC Radiation Exposure Statement:

This equipment complies with FCC radiation exposure limits set forth for an uncontrolled environment. This equipment should be installed and operated with minimum distance 20cm between the radiator & your body.

- English: "
This device complies with Industry Canada licence-exempt RSS standard(s). Operation is subject to the following two conditions:
(1) this device may not cause interference, and
(2) this device must accept any interference, including interference that may cause undesired operation of the device."

- French:"
Le présent appareil est conforme aux CNR d'Industrie Canada applicables aux appareils radio exempts de licence. L'exploitation est autorisée aux deux conditions suivantes :
(1) l'appareil nedoit pas produire de brouillage, et
(2) l'utilisateur de l'appareil doit accepter tout brouillage radioélectrique subi, même si le brouillage est susceptible d'en compromettre le fonctionnement."

Warning: Changes or modifications not expressly approved by the party responsible for compliance could void the user's authority to operate the equipment.

NOTE: This equipment has been tested and found to comply with the limits for a Class B digital device, pursuant to IC Rules. These limits are designed to provide reasonable protection against harmful interference in a residential installation. This equipment generates uses and can radiate radio frequency energy and, if not installed and used in accordance with the instructions, may cause harmful interference to radio communications. However, there is no guarantee that interference will not occur in a particular installation. If this equipment does cause harmful interference to radio or television reception, which can be determined by turning the equipment off and on, the user is encouraged to try to correct the interference by one or more of the following measures:

Reorient or relocate the receiving antenna.

Increase the separation between the equipment and receiver.

Connect the equipment into an outlet on a circuit different from that to which the receiver is connected.

Consult the dealer or an experienced radio/TV technician for help.

IC Radiation Exposure Statement:
This equipment complies with IC radiation exposure limits set forth for an uncontrolled environment. This equipment should be installed and operated with minimum distance 20cm between the radiator & your body.