Powerbank 10K mAh With 9W Solar Panel

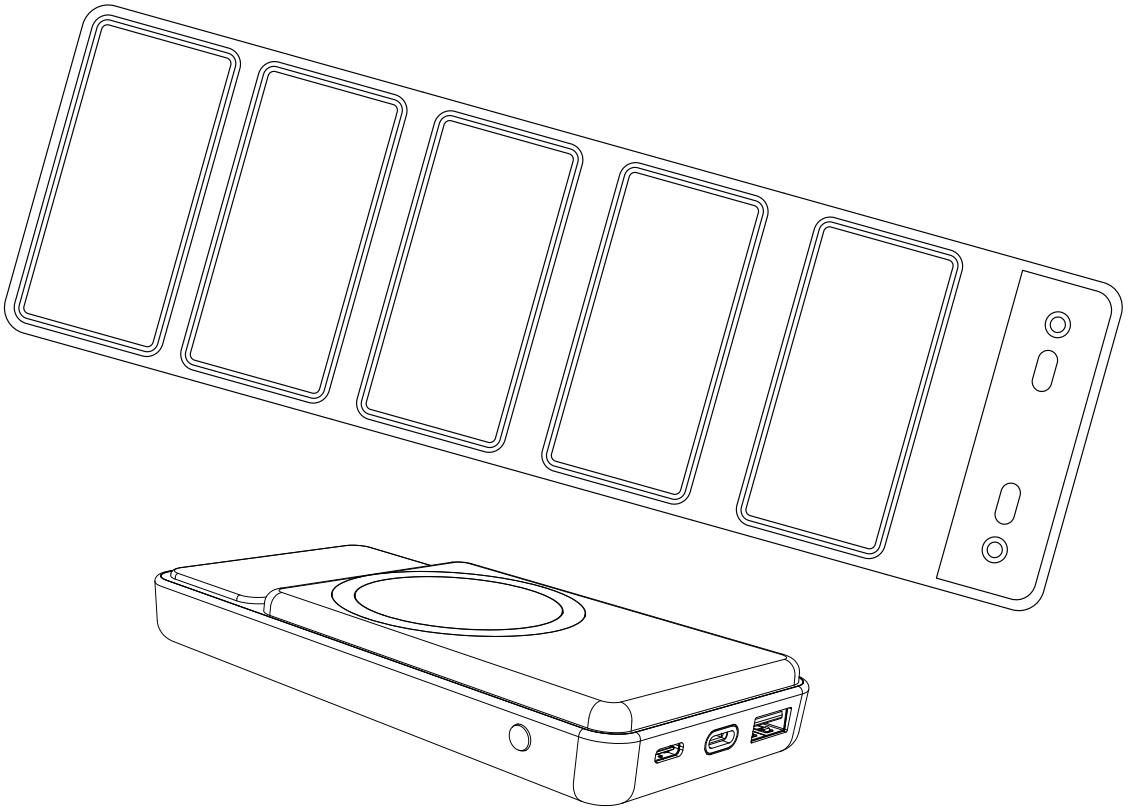

USER MANUAL

Thanks for purchasing our product, please read this user guide carefully before operation and keep it for future reference.

1. Box Contents

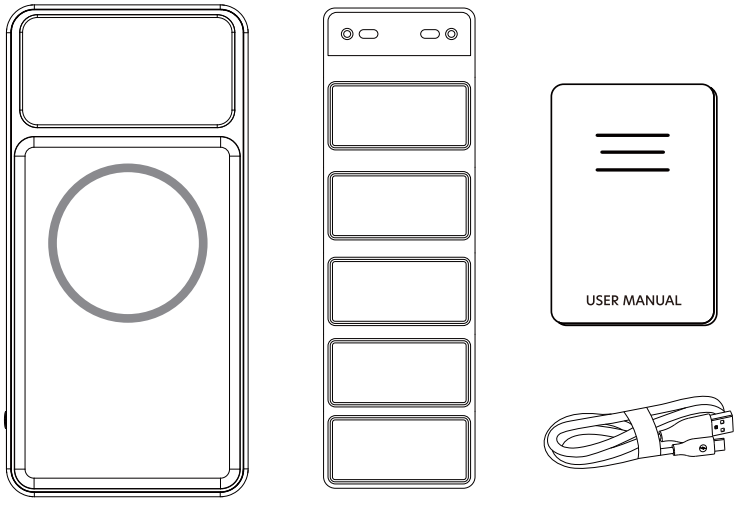

1 Powerbank
1 Solar Panel
1 USB to Type C Cable
1 User Guide

2. About the Powerbank

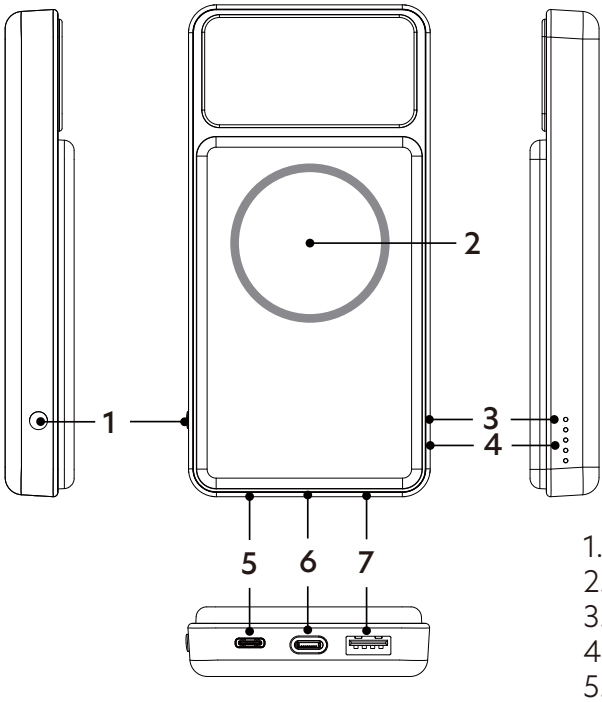

1. Power On/Off Button
2. Wireless Charging Transmitter
3. Wireless Charging/Fast Charging LED
4. Battery Level LEDs
5.Type C Input/Output
6. Lightning Input
7. USB Output

3. About the PV Solar Panel

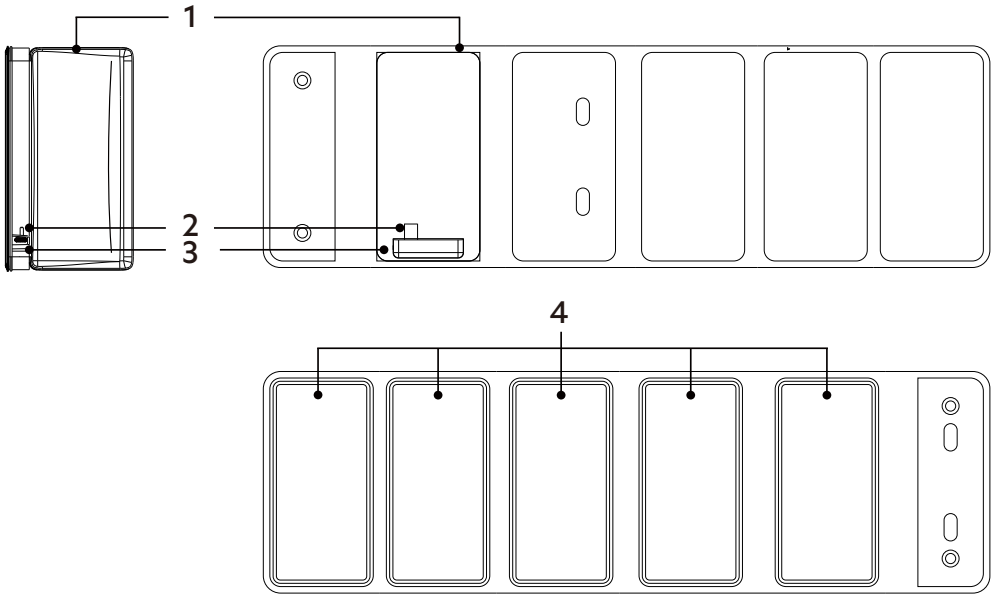

1. Storage Pouch
2. Type C Port(Male)
3. Type C Port(Female)
4. Monocrystalline

4. LED Information

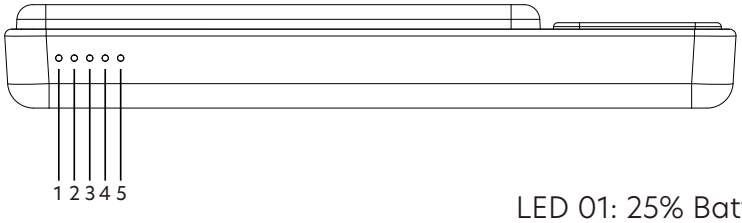

LED 01: 25% Battery Level LED(White)
LED 02: 50% Battery Level LED(White)
LED 03: 75% Battery Level LED(White)
LED 04: 100% Battery Level LED(White)
LED 05: Wireless Charging LED(Green)
Fast Charging LED(Green)

5. Technical Specifications For Powerbank

Battery Type:	Lithium Polymer
Capacity:	3.7V/10.000 mAh
Material:	Plastic
Size:	141.9x70.2x20mm
Weight:	appx. 269 g

Input:	Type C 5V/3A, 9V/2A
Output:	Type C 5V/3A, 9V/2.2A, 12V/1.67A USB 5V/3A, 9V/2A, 12V/1.5A
Wireless:	5W, 7.5W, 10W, 15W

6. Technical Specifications For PV Solar Panel

Cell Type:	Monocrystalline
Material:	PU Leather
Folding Size:	90x180x56mm
Unfolding Size:	565x180x32.5mm
Weight:	appx. 390.8g

Solar Power:	9W Max.
Output:	Type C Male 5V/1.5A Type C Female 5V/1.5A

7. Charging Your Phone Using a Charging Cable

Directly plug the cable into Type C or USB port of the powerbank, and connect the other end to the device. No need to press the power on/off button.

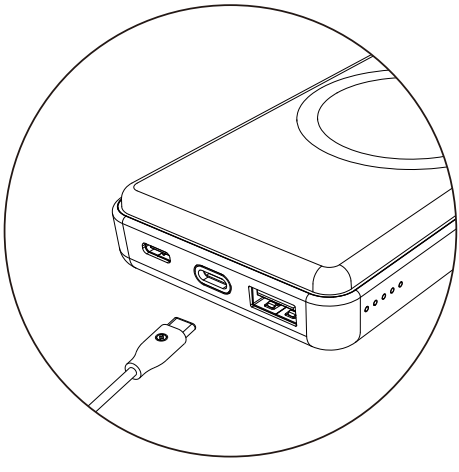

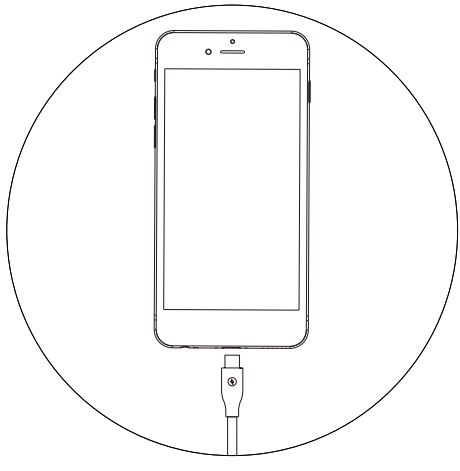

Status	LED 1	LED 2~5
Fast Charging	Solid Green	Showing the current battery level
5V Charging	Off	Showing the current battery level
Fully Charged	Off	Off

8. Charging Other Qi Phone Wirelessly

1. Press the power button to activate the wireless charging function.
2.Align the center phone with the powerbank at the wireless charging area.
If the charging icon doesn't show on the phone, try to adjust the position of the phone.

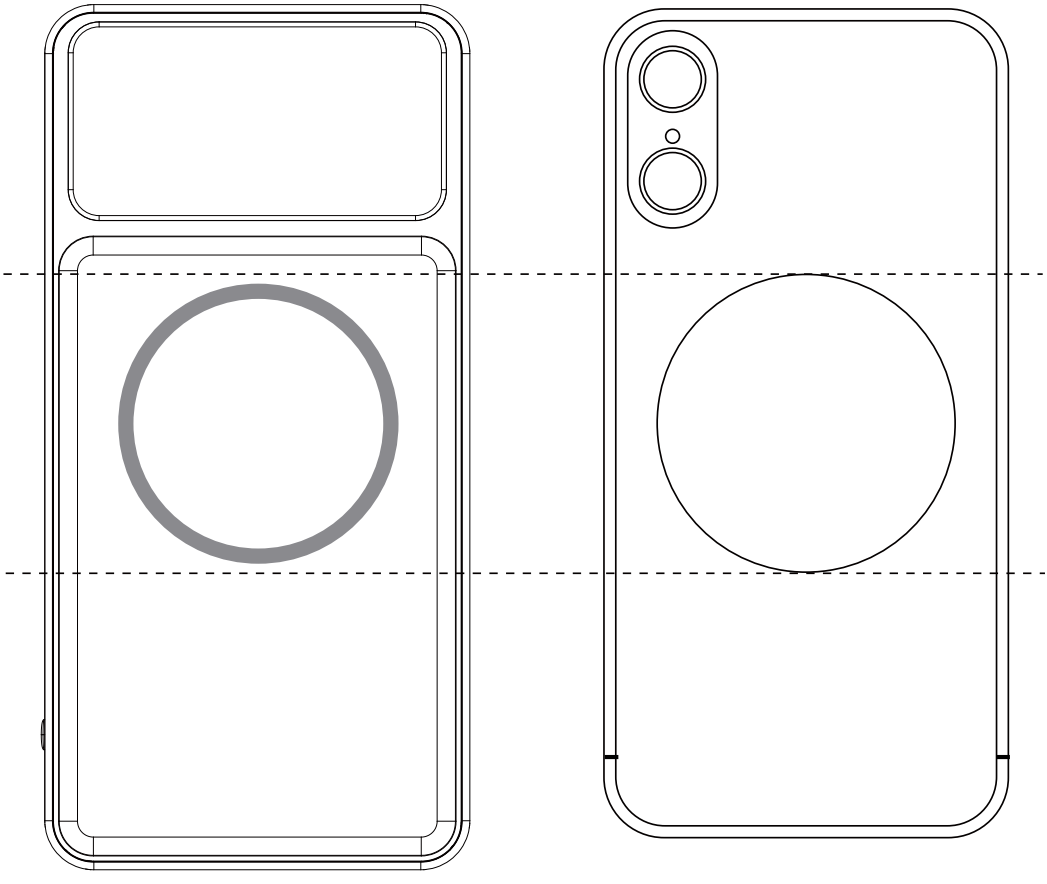

Status	LED 1	LED 2~5
Wireless Charging Activated	Solid Green	Showing the current battery level
Wireless Charging	Solid Green	Showing the current battery level
Fully Charged	Off	Off

9. Charging Your Phone Using Solar Panel

Open the solar panel and take it under the sun firstly.

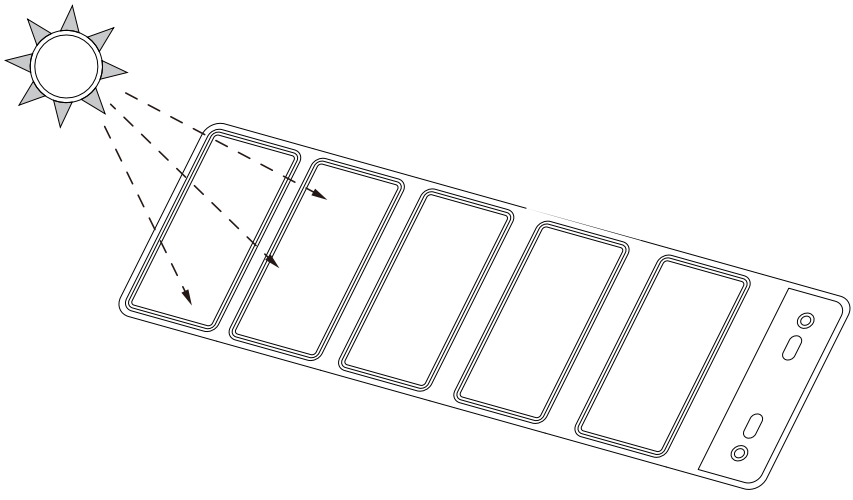

Directly plug the cable into Type C(Female) port of the solar panel, and connect the other end to the device.

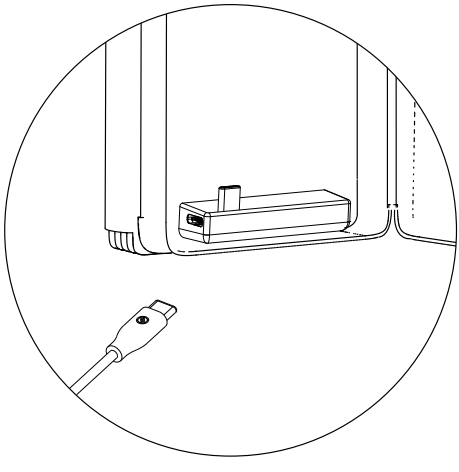

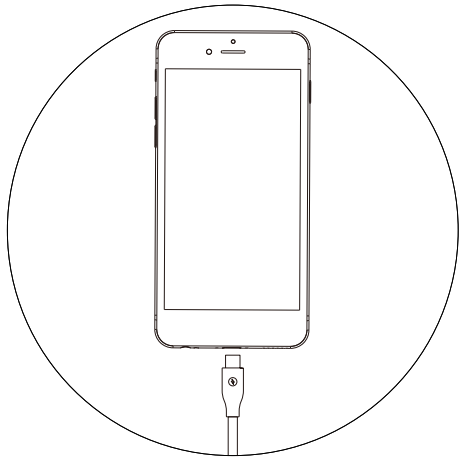

10. Charging the PowerBank

Connect the supplied USB to Type C Cable to the powerbank, and the other end to a USB charger or a free USB port on the PC.
Besides that you are able to charge the powerbank with your iPhone Lightning cable too.

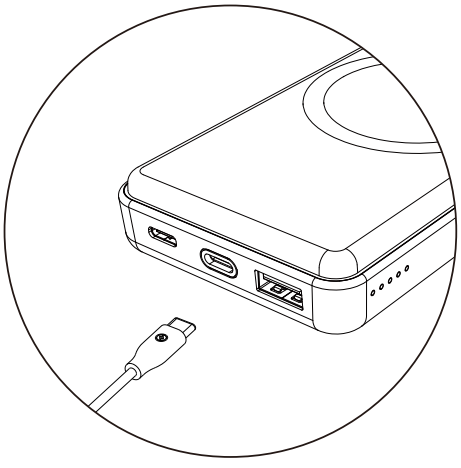

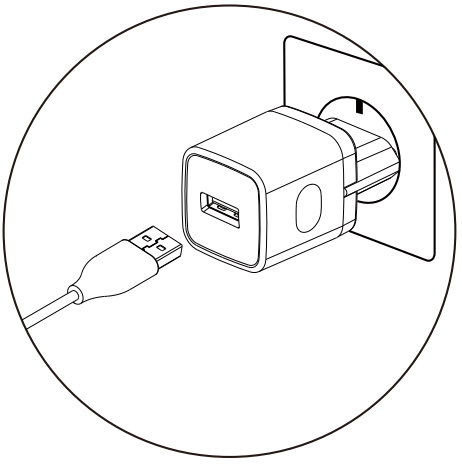

Connect the Type C to Type C Cable to Type C port(Female) of solar panel, and the other end to the powerbank or directly plug the powerbank into Type C port(Male) of solar panel.

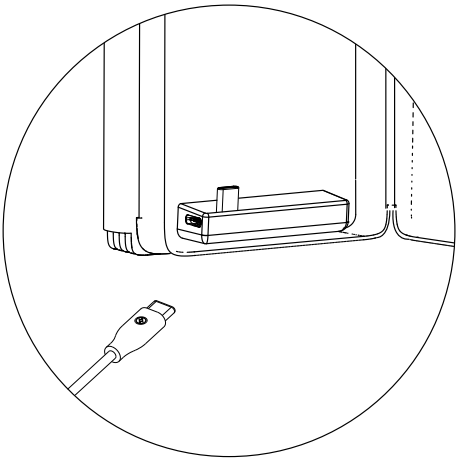

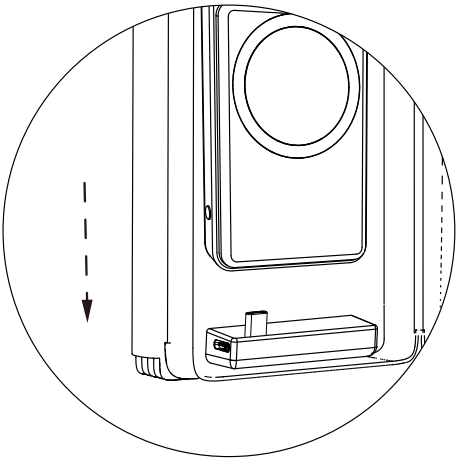

11. Turn Off Power Bank

The powerbank can be switched off automatically in appx. 30 seconds, you can also manually switch it off by double clicking the power button.

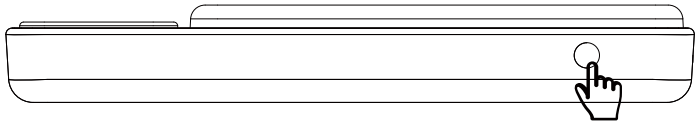

This product complies with the radio interference requirements of the European Community

This symbol indicates that this product shall not be treated as household waste.
For proper disposal, please contact the public collection in your community.

This device is in compliance with the essential requirements and other provisions of UKCA. All essential radio test suites have been carried out.

This device complies with Part 15 of the FCC Rules.
Operation is subject to the following two conditions:
(1) This device may not cause harmful interference, and
(2) This device must accept any interference received, including interference that may cause undesired operation.

FCC Warning

This device complies with part 15 of the FCC Rules. Operation is subject to the following two conditions: (1) This device may not cause harmful interference, and (2) this device must accept any interference received, including interference that may cause undesired operation.

Any Changes or modifications not expressly approved by the party responsible for compliance could void the user's authority to operate the equipment.

Note: This equipment has been tested and found to comply with the limits for a Class B digital device, pursuant to part 15 of the FCC Rules. These limits are designed to provide reasonable protection against harmful interference in a residential installation. This equipment generates uses and can radiate radio frequency energy and, if not installed and used in accordance with the instructions, may cause harmful interference to radio communications. However, there is no guarantee that interference will not occur in a particular installation. If this equipment does cause harmful interference to radio or television reception, which can be determined by turning the equipment off and on, the user is encouraged to try to correct the interference by one or more of the following measures:

-Reorient or relocate the receiving antenna.

-Increase the separation between the equipment and receiver.

-Connect the equipment into an outlet on a circuit different from that to which the receiver is connected.

-Consult the dealer or an experienced radio/TV technician for help.

The device has been evaluated to meet general RF exposure requirement. The device can be used in portable exposure condition without restriction.