AGM GLOBAL VISION

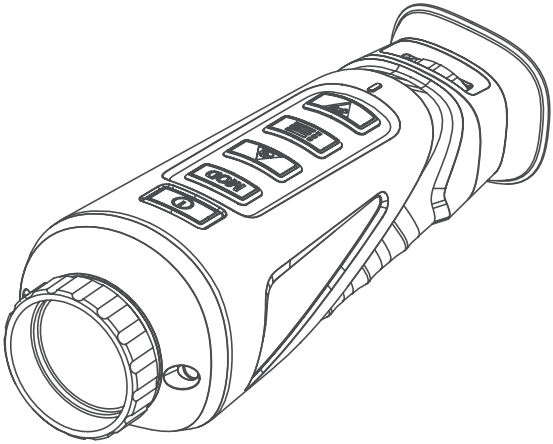

ASP TM35-640

THERMAL IMAGING MONOCULAR

USER MANUAL

© 2020 AGM Global Vision. All rights reserved.

This documentation is subject to change without notice.

No parts of this manual, in whole or in part, may be copied, photocopied, translated, or transmitted by any electronic medium or in machine-readable form without the prior written permission of AGM Global Vision.

If you have questions that are not covered in this manual, or need service, contact AGM Global Vision customer support for additional information prior to returning a product.

AGM Global Vision

173 West Main Street
PO Box 962
Springerville, AZ 85938
Tel. 928.333.4300
support@agmglobalvision.com
www.agmglobalvision.com

EXPORT INFORMATION

Buyer acknowledges that all products supplied by AGM Global Vision are subject to U.S. export control laws, including, but not limited to, the Export Administration Regulations, the International Economic Emergency Powers Act, and various U.S. embargoes and sanctions. AGM Global Vision products may not be exported, re-exported, or transferred contrary to U.S. export control laws. In particular, AGM Global Vision products may not be exported, re-exported, or transferred to prohibited countries, individuals, organizations, or entities, including but not limited to those individuals and entities listed on the List of Specially Designated Nationals and Blocked Persons administered or maintained by the U.S. Office of Foreign Assets Control ("OFAC"), the various lists maintained by the Bureau of Industry and Security of the Department of Commerce, and the U.S. State Department and Buyer represents and warrants that neither Buyer nor any of its officers, directors, or employees are on such lists. Distribution or resale by Buyer to such countries, individuals, organizations, or entities is expressly prohibited. Buyer has and will maintain a positive process to ensure compliance with this Section.

2020.09.011 - FW5.4.24

FCC INFORMATION

Please take attention that changes or modification not expressly approved by the party responsible for compliance could void the user's authority to operate the equipment.

This equipment complies with FCC/IC RSS-102 radiation exposure limits set forth for an uncontrolled environment.

FCC compliance: This product has been tested and found to comply with the limits for a Class B digital device, pursuant to Part 15 of the FCC Rules. These limits are designed to provide reasonable protection against harmful interference in a residential installation. This product generates, uses, and can radiate radio frequency energy and, if not installed and used in accordance with the instructions, may cause harmful interference to radio communications. However, there is no guarantee that interference will not occur in a particular installation. If this product does cause harmful interference to radio or television reception, which can be determined by turning the equipment off and on, the user is encouraged to try to correct the interference by one or more of the following measures:

— Reorient or relocate the receiving antenna.

— Increase the separation between the equipment and receiver.

— Connect the equipment into an outlet on a circuit different from that to which the receiver is connected.

— Consult the dealer or an experienced radio/TV technician for help.

FCC Conditions

This device complies with part 15 of the FCC Rules. Operation is subject to the following two conditions:

1. This device may not cause harmful interference.

2. This device must accept any interference received, including interference that may cause undesired operation.

EU CONFORMITY STATEMENT

This product and - if applicable - the supplied accessories too are marked with "CE" and comply therefore with the applicable harmonized European standards listed under the EMC Directive 2014/30/EU, the RoHS Directive 2011/65/EU

2012/19/EU (WEEE directive): Products marked with this symbol cannot be disposed of as unsorted municipal waste in the European Union. For proper recycling, return this product to your local supplier upon the purchase of equivalent new equipment, or dispose of it at designated collection points. For more information see: www.recyclethis.info

2006/66/EC (battery directive): This product contains a battery that cannot be disposed of as unsorted municipal waste in the European Union. See the product documentation for specific battery information. The battery is marked with this symbol, which may include lettering to indicate cadmium (Cd), lead (Pb), or mercury (Hg). For proper recycling, return the battery to your supplier or to a designated collection point. For more information see: www.recyclethis.info

INDUSTRY CANADA ICES-003 COMPLIANCE

This device meets the CAN ICES-3 (B)/NMB-3(B) standards requirements.

LIST OF CONTENTS

TITLE	PAGE
Safety Summary	5
1. GENERAL INFORMATION	**6**
1.1 System Description	6
1.2 Key Features	7
1.3 Standard Components	7
2. OPERATING INSTRUCTIONS	**8**
2.1. Basic Operations	8
2.2 Main Function	12
2.3 Client Software Introduction	17
3. MAINTENANCE	**19**
3.1 Maintenance	19
3.2 Troubleshooting	20
4. WARRANTY INFORMATION	**21**
4.1 Warranty Information and Registration	21
5. SPECIFICATIONS	**23**
5.1 Specifications	23

SAFETY SUMMARY

- Read and follow all instructions
- Read all warnings
- Only use the attachments/accessories specified by the manufacturer
- All service must be provided by the manufacturer

WARNING:

This product contains natural rubber latex, which may cause potentially fatal allergic reactions! If you are allergic to latex, it is important that you strictly avoid exposure to products that contain it.

WARNINGS AND CAUTIONS:

- All electronic operation should be in strict compliance with the electrical safety regulations, fire prevention regulations and other related regulations in your local region.
- Please use the power adapter, which is provided by a proven manufacturer. The power consumption cannot be less than the required value.
- Do not connect several devices to one power adapter as adapter overload may cause over-heat or fire hazard.
- Do not drop the device or subject it to physical shock, and do not expose it to high electromagnetism radiation. Avoid the device installation on vibrations surface or places subject to shock (ignorance can cause equipment damage).
- Do not place the device in extremely hot (refer to the specification of the device for the detailed operating temperature), cold, dusty or damp locations, and do not expose it to high electromagnetic radiation.
- The device cover for indoor use should be kept from rain and moisture.
- Exposing the device to direct sun light, low ventilation or heat source such as heater or radiator is forbidden (ignorance can cause fire danger).
- Do not aim the device at the sun or extra bright places. A blooming or smear may occur otherwise (which is not a malfunction however), and affecting the endurance of sensor at the same time.
- For long-term storage of the battery, make sure you fully charge it every 6 months, to ensure the battery quality. Otherwise, you may damage the battery.

NOTES:

The detector spectral band provides better visibility through smoke, dust, rain, smog, etc.

Infrared radiation does not travel through glass. As a result, the monocular does not detect objects if they are behind glass windows or other barriers.

1 GENERAL INFORMATION

1.1 SYSTEM DESCRIPTION

The Asp monocular is a handheld thermal camera with functions of observation, hot spot mark, distance measurement, Wi-Fi hotspot, and so on. The high-sensitivity built-in IR detector provides you with clear view even in total darkness.

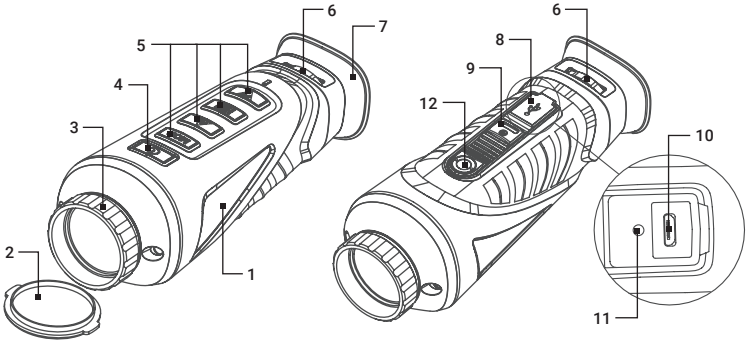

FIGURE 1-1. MAIN PARTS

TABLE 1-1. MAIN PARTS

ITEM	DESCRIPTION
1	Body
2	Lens Cap
3	Focus Ring
4	POWER Button
5	Control Buttons
6	Focus Knob

ITEM	DESCRIPTION
7	Eyepiece
8	USB Interface Cover
9	Eyelet for Lanyard
10	USB Interface
11	Battery Status Indicator
12	Tripod Screw

1.2 KEY FEATURES

- High sensitivity detector
- Adaptive AGC, Digital Detail Enhancement (DDE), 3D DNR
- 1024×768 resolution OLED display
- Distance measurement function
- The device detects and marks the hot spot of highest temperature
- A wide variety of color palettes
- Built-in memory supports video recording/snapshot capturing
- 1x, 2x, 4x, and 8x digital zoom
- Wi-Fi Hotspot
- Device can capture snapshots, record videos, and set parameters via APP after being connected to your phone with Wi-Fi hotspot
- Built-in rechargeable Li-Ion battery
- Up to 5.5 hours continuous running (with Wi-Fi hotspot function off)
- Limited 3-year warranty

1.3 STANDARD COMPONENTS

The standard components are shown in Figure 1-2 and listed in Table 1-2.
The ITEM NO. column indicates the number used to identify items in Figure 1-2.

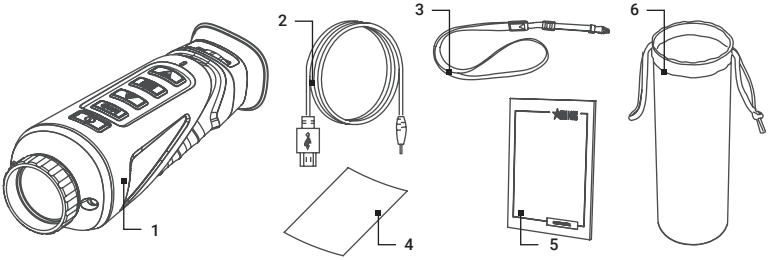

FIGURE 1-2. STANDARD COMPONENTS

TABLE 1-2. STANDARD COMPONENTS

ITEM NO.	DESCRIPTION	QUANTITY
1	Monocular	1
2	USB Cable	1
3	Lanyard	1
4	Lens Cloth	1
5	Operation Manual	1
6	Protective Bag	1

2 OPERATING INSTRUCTIONS

2.1. BASIC OPERATIONS

2.1.1 UNPACKING

The following steps must be completed prior to each mission.

1. Open the carrying case, remove the monocular, and verify that all components are included.
2. Inspect the monocular for any obvious evidence of damage to the optical surfaces, body, eyecup, operation buttons, etc. Ensure that all optical surfaces are clean and ready for use. Clean all optical surfaces with a lens tissue.

2.1.2 CHARGING THE MONOCULAR

When the monocular is turned on, the OSD (on-screen display) shows the battery status. When you see the Low Battery status, charge the monocular and ensure it's working properly.

NOTE:

Please charge the monocular with the delivered USB cable and power adapter. The charging temperature should be 0°C to 45°C (32°F to 113°F).

1. Lift the USB cover.
2. Plug in the USB cable and connect the other terminal into the power adapter.
3. Plug the power adapter to the power source.

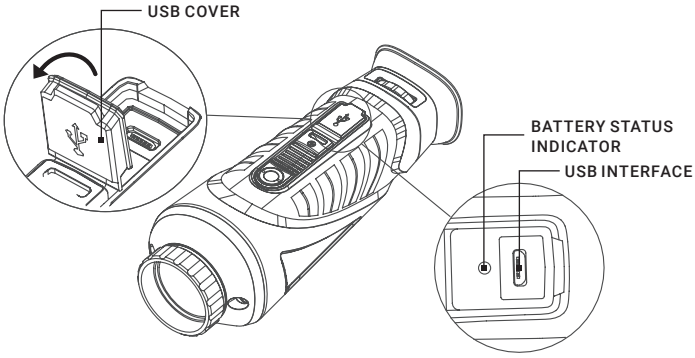

FIGURE 2-1. USB INTERFACE AND BATTERY INDICATOR

TABLE 2-1. BATTERY LED INDICATOR STATUS

INDICATOR	STATUS
Red Flash	Error occurred.
Solid Red	Battery is properly charged.
Solid Green	Battery is fully charged.
Off	Battery is not charged.

2.1.3 CONTROL BUTTONS

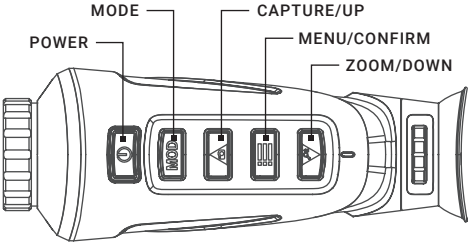

FIGURE 2-2. CONTROL BUTTONS

TABLE 2-2. CONTROL BUTTON FUNCTIONS

BUTTON	FUNCTIONS
POWER	Hold: Power On/Off
MOD MODE	Press: Switch Pallet Hold: Shutter Release
CAPTURE	Press: Capture Snapshot Hold: Start/Stop Record Video Menu Navigation: Cursor Up
MENU	Press: Sleep Mode Hold: Menu Operation Menu Navigation: Confirm
ZOOM ±	Press: Digital Zoom Menu Navigation: Cursor Down

2.1.4 POWER ON AND OFF

Power On

Hold the POWER button ⏻ for 5 seconds to power on the device. An image will appear on the display.

Refer to the figure below for the main view of the monocular display.

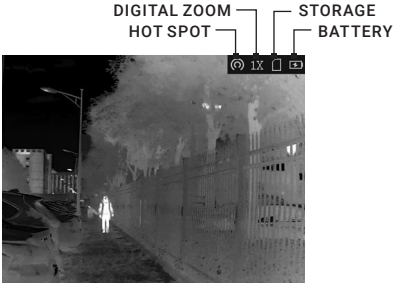

FIGURE 2-3. THE DISPLAY MAIN VIEW

Power Off

When the device is turned on, hold POWER button ⏻ for 5 seconds to power off the device.

2.1.5 SLEEP MODE

In the view mode, press the button. After a few seconds, the display will turn off. Press the button again to exit the Sleep Mode.

2.1.6 THERMAL VIEW OBSERVATION

1. Power on the monocular.
2. Hold the monocular and make sure the eyepiece covers your eye.
3. Adjust the diopter adjustment knob until the OSD text or image is clear.
4. Point the monocular towards the target of the view.
5. Point the monocular towards the target of the view. Bring the object into focus by turning the objective focus ring.

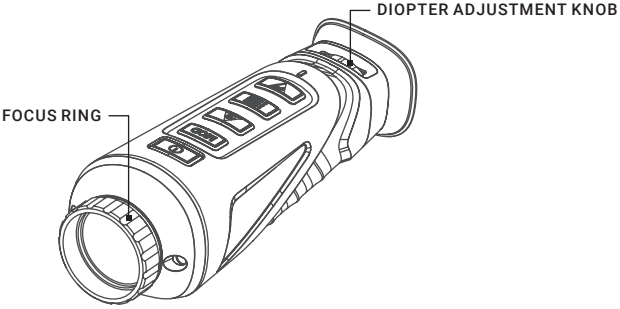

FIGURE 2-4. DIOPTER ADJUSTMENT KNOB AND FOCUS RING

NOTE:

You must perform the focus adjustment before any further use of the monocular.

5. Set palette, brightness, contrast, scene mode and FFC (Flat Field Correction), to display the best image effect.

2.1.7 PALETTE SETTINGS

You can select different palettes to display the same scene in different effects. Press MOD button to switch palettes.

TABLE 2-3. PALETTE SETTINGS

PALETTE	DESCRIPTION
WHITE HOT	The hot part is white-colored in view. The higher the temperature is, the lighter the color is.
BLACK HOT	The hot part is black-colored in view. The higher the temperature is, the more black the color is.
FUSION	The hot part is white-colored. From high temperature to low temperature, the image is colored in from white, yellow, red, pink to purple.
RED HOT	The hot part is red-colored in view. The higher the temperature is, the redder the color is.

2.1.8 DIGITAL ZOOM

Press button in the view mode, the live view will switch between 1×, 2×, 4× and 8× digital zoom.

2.1.9 SHUTTER RELEASE

In the view mode, press the MOD button once to release the shutter once.

2.1.10 RECORD/CAPTURE

Video Recording

In the view mode, hold button and start recording. In the upper left corner, the recording time displays.

Hold button again to stop recording.

FIGURE 2-5. VIDEO RECORDING

Snapshot Capturing

On the view mode, press to capture picture.

NOTE:

• When capturing succeeds, the image freezes for 1 second and a prompt shows on the display.
• For exporting captured pictures, refer to Export Files.

2.1.11 FILE EXPORT

1. Before connecting the thermal monocular to a computer, please make sure that the Wi-Fi function of the monocular is disabled.
2. Connect the thermal monocular to your PC with USB cable and open the detected removable disk.
3. Enter DCIM>100EZVIZ to view the videos and snapshots.
   - Select and copy the videos to PC and play the file with the player.
   - Select and copy the snapshots to PC and view the files.
4. Disconnect the device from your PC.

NOTES:

When you connect the device to PC for the first time, it installs the drive program automatically.

When you connect the device to PC, the device displays images, but functions such as recording, capturing and Wi-Fi hotspot are disabled.

2.2 MAIN FUNCTIONS

2.2.1 MENU OPERATION

When the device powers on, hold button for 4 seconds to display the menu.

Press and buttons to move between menu items. The active element is highlighted in orange. Press button to select menu item or change an option.

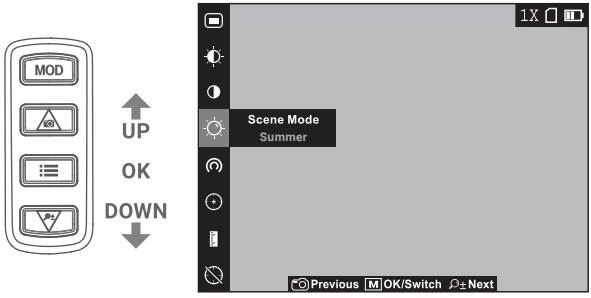

FIGURE 2-6. THE MAIN MENU

TABLE 2-4. MENU FUNCTION

MENU ITEM	SYMBOL	OPTION	FUNCTION
OSD		ON	Press to display or hide the OSD information.
		OFF	
BRIGHTNESS		5 Levels of brightness	Press to adjust the brightness.
CONTRAST		5 Levels of contrast	Press to adjust the contrast.
SCENE MODE		Summer	Press to switch between the Summer mode and Winter mode.
		Winter	
NETWORK		OFF	Press to enable or disable the Wi-Fi hotspot.
		Hotspot	
FFC		Auto / Manual / External	Press to select the FFC mode.
MEASURE		0.8m/1.2m/ 1.8m/3.0m Target Height	Press to enter distance measurement mode.
HOT TRACKING		OFF	Press to enable/disable hot spot mark (marking the spot of highest temperature).
		ON	
DPC	D	---	Press to correct dead pixel manually.
CVBS	~~CVBS~~	OFF	Press to turn on and off the CVBS Output function.
	CVBS	ON	
LANGUAGE	Aa	11 Languages	Press to select the language of interface.
VERSION		---	Press to view the firmware version and serial number.
RESTORE		---	Press to restore the device to defaults.

2.2.2 OSD

1. Hold button to show the menu.
2. Select / menu item and press button to switch the OSD mode.

When OSD (On-Screen Display) is on the information of Wi-Fi hotspot activation, digital zoom, storage memory status, and battery status displays in top right corner of viewfinder.

2.2.3 BRIGHTNESS ADJUSTMENT

1. Hold button to show the menu.
2. Select Brightness menu item and press button to adjust the brightness.

In White Hot mode, you can select one of five levels of the brightness to adjust the image lighter or darker.

In Black Hot mode, the brightness of the image turns in the opposite way.

2.2.4 CONTRAST ADJUSTMENT

1. Hold button to show the menu.
2. Select Contrast menu item and press button to adjust the image contrast. You can select one of five levels of the contrast.

2.2.5 SCENE MODE

You can select proper Scene Mode according to environment temperature to improve the display effect.

1. Hold button to go to the menu.
2. Select / Scene Mode menu item and press to switch scene.
   - Summer mode ( ) is recommended in high temperature environment.
   - Winter mode ( ) is recommended in low temperature environment.
3. Hold for 4 seconds to save settings and exit.

2.2.6 NETWORK CONFIGURATION

Connect your phone to the Wi-Fi hotspot of the monocular, you can configure the parameters and realize functions of the device.

1. Hold button to show the menu.
2. Select menu item to enable Wi-Fi hotspot function.
3. Turn on the WLAN and connect to the Wi-Fi hotspot.
   - Hotspot Name: Wlan-IPTS Serial No.
   - Hotspot Password: Serial No.
4. Search the client software on App Store (iOS System) or Google Play™ (Android System) to download and install the app.
5. Open the APP and connect your phone with the device. You can view the interface of monocular on your phone.

NOTE:

When the power is less than 15%, the Wi-Fi hotspot function will be turned off automatically.

2.2.7 FLAT FIELD CORRECTION

Flat Field Correction (FFC) function can correct nonuniformity of display.

1. Hold [ ] button to show the menu.
2. Select [ ] menu item and press [ ] button to switch the FFC mode.

   Auto: The monocular performs FFC automatically when switching on or rebooting the camera.

   Manual: Hold [MOD] button in live view to correct the nonuniformity of display.

   External: Cover the lens cap, then hold [MOD] button in live view to correct the nonuniformity of display.
3. Hold [ ] button to confirm.

2.2.8 DISTANCE MEASUREMENT

The device can detect the distance between the target and the observation position.

NOTE:

When measuring the distance, keep the hand and the position steady. Otherwise, the accuracy may be affected.

1. Hold [ ] button to show the menu.
2. Select [ ] menu item and press [ ] button to enter the Distance Measurement mode.
3. Press [ ] button to go to the target setting interface.

   1) Press [ ] or [ ] to select the target from Wolf (0.8m), Bear (3.0m), Deer (1.2m), and Custom (1.8m).

   2) Set the target and press [ ] to confirm.
4. Align the center of top mark with the edge of target top. Press [ ].

The cursor blinks on the top edge of the target.

5. Align the center of bottom mark with the edge of target bottom. Press [ ].

The left top of the image displays the distance measurement result and the height of the target.

FIGURE 2-7. DISTANCE MEASUREMENT

NOTE:

Go to distance measurement interface, and press to view the result of the previous measuring target.

2.2.9 HOT TRACKING

The device can detect the highest temperature spot in the scene and mark it on display.

1. Hold button to show the menu.
2. Select / and press button to enable/disable hot spot mark (marking the spot of highest temperature).

When the hot spot mark is enabled, the mark displays in the spot of the highest temperature. When the scene changes, the mark moves.

2.2.10 DEFECTIVE PIXELS CORRECTION

Defective Pixels Correction (DPC) function can correct the defective pixels on the screen which are not performed as expected.

Before you start switch the palettes mode to White Hot mode.

1. Hold button to show the menu.
2. Select menu item.
3. Press button to select the offset. The offset refers to the moving length of cursor.
4. Press and to select the moving direction.
5. Press to move the cursor to the position of dead pixel.
6. Hold to correct the dead pixel.

2.2.11 CVBS OUTPUT

You can view the video on CVBS monitor, to get a better and clear image, more convenient to check the detail.

1. Connect the USB-CVBS cable to USB port of thermal monocular and to monitor's CVBS port.

NOTE:

USB-CVBS cable need to be purchase separately.

NOTE:

CVBS Output function doesn't support hot plug, so please connect the cable before power on.

2. Hold button to show the menu.
3. Select **CVBS** menu item and press button to turn on or turn off the CVBS video output.

2.2.12 LANGUAGE SETTING

You can select different languages of user interface.

1. Hold button to show the menu.
2. Select Aa Language menu item and press button to select the language.

The following languages are supported: English, Russian, German, Czech, French, Spanish, Danish, Norwegian, Swedish, Finnish, Hungarian, Italian, Polish, Portuguese, Romanian, Slovak, Spanish.

3. Hold to save settings and exit.

2.3 CLIENT SOFTWARE INTRODUCTION

We recommend using T-Vision (V5.4.12 and below) software. Install the client software on your mobile phone first, and then connect your phone to the hotspot of the monocular. Refer to chapter 2.2.6 for details of hotspot connection.

NOTE:

The device password is set by user at first activation. If the password was lost or forgotten, it can be reset. To make a reset, provide the following action:

1. **When the monocular is turned on, hold the button for three seconds to activate the OSD menu.**
2. **Move the cursor to menu item and press the button to restore all parameters to default settings.**

1. Open the APP and connect the phone or pad with the device.

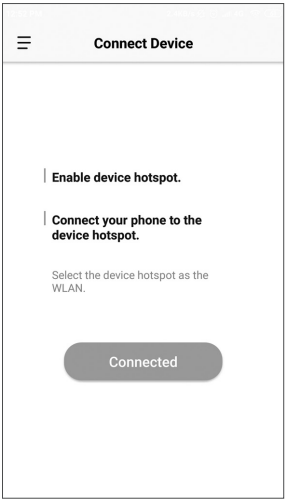

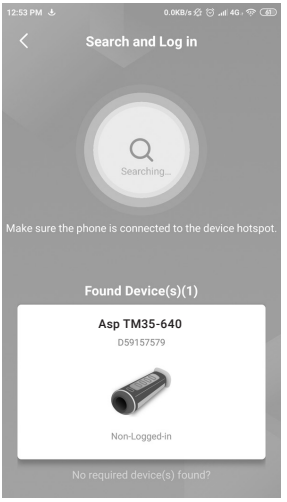

2. If the device is inactivated, set the password and activate it. If the device is activated, enter the password to add it to app.

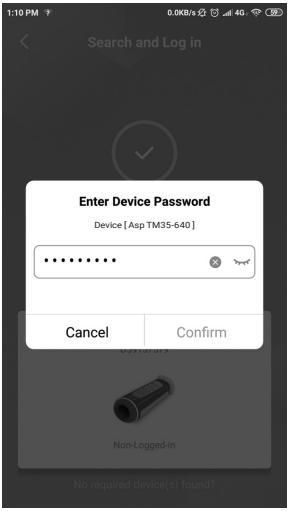

3. When the device is added, the live view can be seen. You can view the interface of the monocular on the software. User can change such image parameters as brightness, contrast, zoom, palettes directly via phone or pad as well as record video on phone/pad memory.

3 MAINTENANCE

3.1 MAINTENANCE

3.1.1 CLEANING PROCEDURES

1. Gently brush off any dirt from the body of the device using a clean, soft cloth.
2. Moisten the cloth with fresh water and gently wipe down the external surfaces (except lenses).
3. Dry any wet surfaces (except lenses) using another dry, clean, soft cloth.
4. Using a lens brush, carefully remove all loose dirt from the lenses.
5. Dampen a cotton swab with ethanol and slowly, gently wipe down the lenses. Clean the glass surfaces using circular movements, starting from the center of the lens and moving out towards the edge, without touching the lens holder. Change the cotton swab after each circular stroke. Repeat this step until the glass surfaces are clean.
6. Clean the accessories with a soft brush (or cloth) dampened with soap and water.

3.1.2 PREPARING FOR EXTENDED STORAGE

CAUTION:

Thoroughly dry each item before placing them into the storage case.

To prepare the monocular for extended storage:

1. Clean the monocular and accessories.
2. Place all items into the storage case.

3.1.3 VIEW DEVICE INFORMATION

1. Hold **button** to show the menu of device.
2. Select , and press **button**. You can view the device information such as version, and serial No.

3.1.4 UPGRADE DEVICE

Please get the upgrade package first.

1. Connect the device to your PC with USB cable.
2. Open the detected disk, copy the upgrade file and paste it to the root directory of the device.
3. Disconnect the device from your PC.
4. Reboot the device.

The device upgrades automatically. The upgrading process will be displayed in the main interface.

3.1.5 RESTORE DEVICE

1. Hold **button** to show the menu of device.
2. Select and press **button** to restore the device to defaults according to the prompt.

3.2 TROUBLESHOOTING

Table 3-1 lists the most common malfunctions that may occur with your equipment. Perform the tests, inspections, and corrective actions in the order they appear in the table.

This table does not list all the malfunctions that may occur with your device, or all of the tests, inspections, and corrective actions that may be necessary to fix them. If the equipment malfunction is not corrected by the suggested actions, or a problem occurs that is not listed in this table, please contact AGM Global Vision's Customer Support center or your retailer.

TABLE 3-1. TROUBLESHOOTING

MALFUNCTION	CORRECTIVE ACTION
The charge indicator flashes improperly.	Examine whether the device is charged with standard power adapter and the charging temperature is 0°C to 45°C (32°F to 113°F).
Device power indicator is off.	Examine whether the device is off-battery.
The image of the monocular is not clear.	Perform the sight adjustment referring to section 2.1.5.
Wi-Fi is not found.	Examine whether the Wi-Fi function is turned on. If not, go to OSD menu and turn on Wi-Fi.
Capturing or recording fails.	Examine the items below: 1. Whether the device is connected to your PC and disabled the capturing and recording. 2. Whether the storage space is full. 3. Whether the device is low-battery.
The PC cannot identify the monocular.	Examine the items below: 1. Whether the device is connected to your PC with standard USB cable. 2. If you use other USB cables, make sure the cable length is no longer than 1 m. 3. Whether the Wi-Fi function is turned on. If so, go to OSD menu and turn off Wi-Fi.

4 WARRANTY INFORMATION

4.1 WARRANTY INFORMATION AND REGISTRATION

4.1.1 WARRANTY INFORMATION

This product is guaranteed to be free from manufacturing defects in material and workmanship under normal use for a period of three (3) years from the date of purchase. In the event that a defect covered by the warranty below occurs during the applicable period stated above, AGM Global Vision, at its discretion, will either repair or replace the product; such action on the part of AGM Global Vision shall be the full extent of AGM Global Vision's liability, and the Customer's sole and exclusive reparation. This warranty does not cover a product if it has been (a) used in ways other than its normal and customary manner; (b) subjected to misuse; (c) subjected to alterations, modifications or repairs by the Customer or by any party other than AGM Global Vision without prior written consent of AGM Global Vision; (d) is the result of a special order or categorized as "close-out" merchandise or merchandise sold "as-is" by either AGM Global Vision or the AGM Global Vision dealer; or (e) merchandise that has been discontinued by the manufacturer and either parts or replacement units are not available due to reasons beyond the control of AGM Global Vision. AGM Global Vision shall not be responsible for any defects or damage that in AGM Global Vision's view are a result from the mishandling, abuse, misuse, improper storage or improper operation of the device, including use in conjunction with equipment that is electrically or mechanically incompatible with, or of inferior quality to, the product, as well as failure to maintain the environmental conditions specified by the manufacturer. This warranty is extended only to the original purchaser. Any breach of this warranty shall be enforced unless the customer notifies AGM Global Vision at the address noted below within the applicable warranty period.

The customer understands and agrees that except for the foregoing warranty, no other warranties written or oral, statutory, expressed or implied, including any implied warranty of merchantability or fitness for a particular purpose, shall apply to the product. All such implied warranties are hereby and expressly disclaimed.

4.1.2 LIMITATION OF LIABILITY

AGM Global Vision will not be liable for any claims, actions, suits, proceedings, costs, expenses, damages, or liabilities arising out of the use of this product. Operation and use of the product are the sole responsibility of the Customer. AGM Global Vision's sole undertaking is limited to providing the products and services outlined herein in accordance with the terms and conditions of this Agreement. The provision of products sold and services performed by AGM Global Vision to the Customer shall not be interpreted, construed, or regarded, either expressly or implied, as being for the benefit of or creating any obligation toward any third party of legal entity outside AGM Global Vision and

the Customer; AGM Global Vision's obligations under this Agreement extend solely to the Customer. AGM Global Vision's liability hereunder for damages, regardless of the form or action, shall not exceed the fees or other charges paid to AGM Global Vision by the customer or customer's dealer. AGM Global Vision shall not, in any event, be liable for special, indirect, incidental, or consequential damages, including, but not limited to, lost income, lost revenue, or lost profit, whether such damages were foreseeable or not at the time of purchase, and whether or not such damages arise out of a breach of warranty, a breach of agreement, negligence, strict liability, or any other theory of liability.

4.1.3 PRODUCT REGISTRATION

In order to validate the warranty on your product, the customer must complete and submit AGM Global Vision PRODUCT REGISTRATION FORM on our website (www.agmglobalvision.com/customer-support).

4.1.4 OBTAINING WARRANTY SERVICE

To obtain warranty service on your unit, the End-user (Customer) must notify the AGM Global Vision service department via e-mail. Send any requests to **support@agmglobalvision.com** to receive a Return Merchandise Authorization number (RMA). When returning any device, please take the product to your retailer, or send the product, postage paid and with a copy of your sales receipt, to AGM Global Vision's service center at the address listed above. All merchandise must be fully insured with the correct postage; AGM Global Vision will not be responsible for improper postage or merchandise that becomes lost or damaged during shipment. When sending product back, please clearly write the RMA# on the outside of the shipping box. Please include a letter that indicates your RMA#, the Customer's Name, a Return Address, reason for the return, contact information (valid telephone numbers and/or an e-mail address), and proof of purchase that will help us to establish the valid start date of the warranty. Product merchandise returns that do not have an RMA# listed may be refused, or a significant delay in processing may occur. Estimated Warranty service time is 10-20 business days. The End-user/Customer is responsible for postage to AGM Global Vision for warranty service. AGM Global Vision will cover return postage/shipping after warranty repair to the End-user/Customer only if the product is covered by the aforementioned warranty. AGM Global Vision will return the product after warranty service by domestic UPS Ground service and/or domestic mail. Should any other requested, required, or international shipping methods be necessary, the postage/shipping fee will be the responsibility of the End-user/Customer.

For service, repair or replacement, please contact:

AGM Global Vision

173 West Main Street
PO Box 962
Springerville, AZ 85938
Tel. 928.333.4300
support@agmglobalvision.com
www.agmglobalvision.com

5 SPECIFICATIONS

5.1 SPECIFICATIONS

ITEM	DATA
Image sensor	Vanadium Oxide Uncooled Focal Plane Arrays
Detector Pitch	17um
Response Wavebond	8um to 14um
NETD	< 35mk (@25°C, F#=1.0)
Refresh Rate	50 Hz
Max. Resolution	640×512
Lens (Focal Length)	35mm
F number	1.0
Field of View	17.7° × 14.2°
Optical Magnification	1.4×
Digital Zoom	1×, 2×, 4×, 8×
Flat Field Correction	Auto, Manual, External Correction
Palettes	Black Hot, White Hot, Red Hot, Fusion
Monitor	0.39-inch, OLED, 1024 × 768
Hot Track	Yes
Storage	Built-in memory module (16GB)
Record Video	Support on-board video recording
Capture Snapshot	Yes
Wi-Fi	Yes (Hotspot)
CVBS Output	Yes (via USB)
Battery	Built-in rechargeable Lithium battery
Operating Time	Up to 5.5 hours
Battery Capacity Display	Yes
Power	5V DC/2A, 2W
Working Temperature	-30°C to 55°C (-22°F to 131°F)
Interface	USB Type C
Protection Level	IP67
Dimensions	202 × 74 × 66 mm (7.9 × 2.9 × 2.6 in)
Weight	480 g (16.9 oz)

**All data subject to change without notice.*

AGM GLOBAL VISION

AGM Global Vision

MAIN OFFICE
173 West Main Street
PO Box 962
Springerville, AZ 85938
USA
Tel. +1.928.333.4300
info@agmglobalvision.com
www.agmglobalvision.com

EUROPEAN OFFICE
Andrey Lyapchev #7
Sofia, P.C. 1756
Bulgaria
Tel. +44.292.255.0509
info@agmglobalvision.eu
www.agmglobalvision.eu