TEST REPORT

Product	:	JSOM CONNECT MODULE
Trade mark	:	JABIL
Model/Type reference	:	CONNECT
Serial Number	:	JSZKSCNJV0012111000032
Report Number	:	EED32N80136902
FCC ID	:	2AXNJ-JSOM-CN
Date of Issue	:	Jun. 02, 2021
Test Standards	:	47 CFR Part 15 Subpart C
Test result	:	PASS

Prepared for:

Jabil

10560 Dr M.L.K. Jr St N, St. Petersburg, Florida, United States

Prepared by:

Centre Testing International Group Co., Ltd.
Hongwei Industrial Zone, Bao'an 70 District,
Shenzhen, Guangdong, China
TEL: +86-755-3368 3668
FAX: +86-755-3368 3385

Compiled by: Martin Lee — Reviewed by: Aaron Ma

Approved by: David Wang — Date: Jun. 02, 2021

Check No.:1224190321

2 Content

1 COVER PAGE 1
2 CONTENT 2
3 VERSION 3
4 TEST SUMMARY 4
5 GENERAL INFORMATION 5
5.1 CLIENT INFORMATION 5
5.2 GENERAL DESCRIPTION OF EUT 5
5.3 PRODUCT SPECIFICATION SUBJECTIVE TO THIS STANDARD 5
5.4 TEST CONFIGURATION 7
5.5 TEST ENVIRONMENT 7
5.6 DESCRIPTION OF SUPPORT UNITS 7
5.7 TEST LOCATION 8
5.8 MEASUREMENT UNCERTAINTY (95% CONFIDENCE LEVELS, K=2) 8
6 EQUIPMENT LIST 9
7 TEST RESULTS AND MEASUREMENT DATA 11
7.1 ANTENNA REQUIREMENT 11
7.2 MAXIMUM CONDUCTED OUTPUT POWER 12
7.3 DTS BANDWIDTH 13
7.4 MAXIMUM POWER SPECTRAL DENSITY 14
7.5 BAND EDGE MEASUREMENTS AND CONDUCTED SPURIOUS EMISSION 15
7.6 RADIATED SPURIOUS EMISSION & RESTRICTED BANDS 16
8 APPENDIX A 43
PHOTOGRAPHS OF TEST SETUP 44
PHOTOGRAPHS OF EUT CONSTRUCTIONAL DETAILS 45

3 Version

Version No.	Date	Description
00	Jun. 02, 2021	Original

4 Test Summary

Test Item	Test Requirement	Result
Antenna Requirement	47 CFR Part 15 Subpart C Section 15.203/15.247 (c)	PASS
AC Power Line Conducted Emission	47 CFR Part 15 Subpart C Section 15.207	N/A
DTS Bandwidth	47 CFR Part 15 Subpart C Section 15.247 (a)(2)	PASS
Maximum Conducted Output Power	47 CFR Part 15 Subpart C Section 15.247 (b)(3)	PASS
Maximum Power Spectral Density	47 CFR Part 15 Subpart C Section 15.247 (e)	PASS
Band edge measurements	47 CFR Part 15 Subpart C Section 15.247(d)	PASS
Conducted Spurious Emissions	47 CFR Part 15 Subpart C Section 15.247(d)	PASS
Radiated Spurious Emission & Restricted bands	47 CFR Part 15 Subpart C Section 15.205/15.209	PASS

Remark:
N/A: The EUT powered by DC, So Not Applicable.
Company Name and Address shown on Report, the sample(s) and sample Information were provided by the applicant who should be responsible for the authenticity which CTI hasn't verified.

5 General Information

5.1 Client Information

Applicant:	Jabil
Address of Applicant:	10560 Dr M.L.K. Jr St N, St. Petersburg, Florida, United States
Manufacturer:	Jabil
Address of Manufacturer:	10560 Dr M.L.K. Jr St N, St. Petersburg, Florida, United States
Factory:	Jabil Precision Industry (Guangzhou) CO., LTD.
Address of Factory:	5th floor, Building C, No. 1199, Hulin Road, Huangpu District, Guangzhou, GuangDong (510700), China

5.2 General Description of EUT

Product Name:	JSOM CONNECT MODULE
Mode No.:	CONNECT
Trade mark:	JABIL
EUT Supports Radios application:	Bluetooth 5.0 single mode: 2402-2480MHz 2.4GHz: Wi-Fi: 802.11b/g/n(HT20): 2412MHz~2472MHz; 802.11n(HT40): 2422MHz~2462MHz
Sample Received Date:	Apr. 19, 2021
Sample tested Date:	Apr. 19, 2021 to May 22, 2021

5.3 Product Specification subjective to this standard

Operation Frequency:	IEEE 802.11b/g/n(HT20): 2412MHz to 2472MHz IEEE 802.11n(HT40): 2422MHz to 2462MHz			
Modulation Type:	IEEE for 802.11b: DSSS(CCK, DQPSK, DBPSK) IEEE for 802.11g :OFDM(64QAM, 16QAM, QPSK, BPSK) IEEE for 802.11n(HT20 and HT40) : OFDM (64QAM, 16QAM, QPSK, BPSK)			
Number of Channel:	IEEE 802.11b/g, IEEE 802.11n HT20: 13 Channels IEEE 802.11n HT40: 9 Channels			
Channel Separation:	5MHz			
Product Type:	☐ Mobile ☐ Portable ☒ Fix Location			
Antenna Type:	PCB antenna	PCB	Flex	FPC Self-adhesive
Antenna Gain:	4.97dBi	3.45dBi	4.03dBi	2.17dBi
Power Supply:	DC 3.135V~3.465V			
Test Voltage:	DC 3.3V			

Note: Only the maximum antenna gain was tested.

Operation Frequency each of channel (802.11b/g/n HT20)							
Channel	Frequency	Channel	Frequency	Channel	Frequency	Channel	Frequency
1	2412MHz	5	2432MHz	9	2452MHz	13	2472MHz
2	2417MHz	6	2437MHz	10	2457MHz		
3	2422MHz	7	2442MHz	11	2462MHz		
4	2427MHz	8	2447MHz	12	2467MHz		

Operation Frequency each of channel (802.11n HT40)					
Channel	Frequency	Channel	Frequency	Channel	Frequency
3	2422MHz	6	2437MHz	9	2452MHz
4	2427MHz	7	2442MHz	10	2457MHz
5	2432MHz	8	2447MHz	11	2462MHz

Note:
In section 15.31(m), regards to the operating frequency range over 10 MHz, the lowest frequency, the middle frequency, and the highest frequency of channel were selected to perform the test, and the selected channel see below:

802.11b/g/n (HT20)

Channel	Frequency
The lowest channel	2412MHz
The middle channel	2442MHz
The highest channel	2472MHz

802.11n (HT40)

Channel	Frequency
The lowest channel	2422MHz
The middle channel	2442MHz
The highest channel	2462MHz

5.4 Test Configuration

EUT Test Software Settings:	
Software:	AmebaD_mptool_2V0
EUT Power Grade:	Default
Use test software to set the lowest frequency, the middle frequency and the highest frequency keep transmitting of the EUT.	
Test Mode:	
We have verified the construction and function in typical operation. All the test modes were carried out with the EUT in transmitting operation, which was shown in this test report and defined as follows:	
Per-scan all kind of data rate in lowest channel, and found the follow list which it was worst case.	
Mode	Data rate
802.11b	1Mbps
802.11g	6Mbps
802.11n(HT20)	6.5Mbps
802.11n(HT40)	13.5Mbps
According to ANSI C63.10 standards, the test results are both the “worst case” and “worst setup” 1Mbps for 802.11b, 6Mbps for 802.11g, 6.5Mbps for 802.11n(HT20) and 6.5Mbps for 802.11n(HT40).	

5.5 Test Environment

Operating Environment:	
Radiated Spurious Emissions:	
Temperature:	22~25.0 °C
Humidity:	50~55 % RH
Atmospheric Pressure:	1010mbar
RF Conducted:	
Temperature:	22~25.0 °C
Humidity:	50~55 % RH
Atmospheric Pressure:	1010mbar

5.6 Description of Support Units

The EUT has been tested with associated equipment below.

Associated equipment name		Manufacture	model	S/N serial number	Supplied by	Certification
AE1	Notebook	DELL	DELL 3490	D245DX2	/	FCC ID
AE2	DC	/	10209898	/	/	DOC

5.7 Test Location

All tests were performed at:

Centre Testing International Group Co., Ltd
Building C, Hongwei Industrial Park Block 70, Bao'an District, Shenzhen, China
Telephone: +86 (0) 755 33683668 Fax:+86 (0) 755 33683385
No tests were sub-contracted.
FCC Designation No.: CN1164

5.8 Measurement Uncertainty (95% confidence levels, k=2)

No.	Item	Measurement Uncertainty
1	Radio Frequency	7.9×10^{-8}
2	RF power, conducted	0.46dB (30MHz-1GHz)
		0.55dB (1GHz-18GHz)
3	Radiated Spurious emission test	3.3dB (9kHz-30MHz)
		4.3dB (30MHz-1GHz)
		4.5dB (1GHz-18GHz)
		3.4dB (18GHz-40GHz)
4	Conduction emission	3.5dB (9kHz to 150kHz)
		3.1dB (150kHz to 30MHz)
5	Temperature test	0.64°C
6	Humidity test	3.8%
7	DC power voltages	0.026%

6 Equipment List

RF test system					
Equipment	**Manufacturer**	**Mode No.**	**Serial Number**	**Cal. Date (mm-dd-yyyy)**	**Cal. Due date (mm-dd-yyyy)**
Spectrum Analyzer	R&S	FSV40	101200	12-28-2020	12-27-2021
Signal Generator	Keysight	N5182B	MY53051549	12-28-2020	12-27-2021
Temperature/ Humidity Indicator	biaozhi	HM10	1804186	06-29-2020	06-28-2021
High-pass filter	Sinoscite	FL3CX03WG18 NM12-0398-002	---	---	---
High-pass filter	MICRO-TRONICS	SPA-F-63029-4	---	---	---
DC Power	Keysight	E3642A	MY56376072	12-28-2020	12-27-2021
PC-1	Lenovo	R4960d	---	---	---
Power unit	R&S	OSP120	101374	12-28-2020	12-27-2021
RF control unit	JS Tonscend	JS0806-2	158060006	12-28-2020	12-27-2021
BT&WI-FI Automatic test software	JS Tonscend	JS1120-3	---	---	---

3M Semi/full-anechoic Chamber					
Equipment	**Manufacturer**	**Model No.**	**Serial Number**	**Cal. date (mm-dd-yyyy)**	**Cal. Due date (mm-dd-yyyy)**
3M Chamber & Accessory Equipment	TDK	SAC-3	---	05-24-2019	05-23-2022
TRILOG Broadband Antenna	Schwarzbeck	VULB9163	9163-618	05-16-2020 05-15-2021	05-15-2021 05-14-2022
Loop Antenna	Schwarzbeck	FMZB 1519B	1519B-076	04-25-2018 04-24-2021	04-24-2021 04-23-2024
Receiver	R&S	ESCI7	100938-003	10-16-2020	10-15-2021
Multi device Controller	maturo	NCD/070/10711 112	---	---	---
Temperature/ Humidity Indicator	Shanghai qixiang	HM10	1804298	06-29-2020	06-28-2021
Cable line	Fulai(7M)	SF106	5219/6A	---	---
Cable line	Fulai(6M)	SF106	5220/6A	---	---
Cable line	Fulai(3M)	SF106	5216/6A	---	---
Cable line	Fulai(3M)	SF106	5217/6A	---	---

3M full-anechoic Chamber					
Equipment	**Manufacturer**	**Model No.**	**Serial Number**	**Cal. date (mm-dd-yyyy)**	**Cal. Due date (mm-dd-yyyy)**
RSE Automatic test software	JS Tonscend	JS36-RSE	10166	---	---
Receiver	Keysight	N9038A	MY57290136	03-04-2021	03-03-2022
Spectrum Analyzer	Keysight	N9020B	MY57111112	03-04-2021	03-03-2022
Spectrum Analyzer	Keysight	N9030B	MY57140871	03-04-2021	03-03-2022
TRILOG Broadband Antenna	Schwarzbeck	VULB 9163	9163-1148	04-25-2018 04-24-2021	04-24-2021 04-23-2024
Horn Antenna	Schwarzbeck	BBHA 9170	9170-832	04-25-2018 04-24-2021	04-24-2021 04-23-2024
Horn Antenna	ETS-LINDGREN	3117	00057407	07-10-2018	07-09-2021
Preamplifier	EMCI	EMC184055SE	980596	05-20-2020 05-19-2021	05-19-2021 05-18-2022
Preamplifier	EMCI	EMC001330	980563	04-22-2020 04-21-2021	04-21-2021 04-20-2022
Preamplifier	JS Tonscend	980380	EMC051845 SE	12-31-2020	12-30-2021
Temperature/ Humidity Indicator	biaozhi	GM1360	EE1186631	04-27-2020 04-26-2021	04-26-2021 04-25-2022
Fully Anechoic Chamber	TDK	FAC-3	---	01-09-2021	01-08-2024
Filter bank	JS Tonscend	JS0806-F	188060094	04-10-2021	04-09-2024
Cable line	Times	SFT205-NMSM-2.50M	394812-0001	---	---
Cable line	Times	SFT205-NMSM-2.50M	394812-0002	---	---
Cable line	Times	SFT205-NMSM-2.50M	394812-0003	---	---
Cable line	Times	SFT205-NMSM-2.50M	393495-0001	---	---
Cable line	Times	EMC104-NMNM-1000	SN160710	---	---
Cable line	Times	SFT205-NMSM-3.00M	394813-0001	---	---
Cable line	Times	SFT205-NMNM-1.50M	381964-0001	---	---
Cable line	Times	SFT205-NMSM-7.00M	394815-0001	---	---
Cable line	Times	HF160-KMKM-3.00M	393493-0001	---	---

7 Test results and Measurement Data

7.1 Antenna Requirement

Standard requirement:	47 CFR Part 15C Section 15.203 /247(c)
15.203 requirement: An intentional radiator shall be designed to ensure that no antenna other than that furnished by the responsible party shall be used with the device. The use of a permanently attached antenna or of an antenna that uses a unique coupling to the intentional radiator, the manufacturer may design the unit so that a broken antenna can be replaced by the user, but the use of a standard antenna jack or electrical connector is prohibited. 15.247(b) (4) requirement: The conducted output power limit specified in paragraph (b) of this section is based on the use of antennas with directional gains that do not exceed 6 dBi. Except as shown in paragraph (c) of this section, if transmitting antennas of directional gain greater than 6 dBi are used, the conducted output power from the intentional radiator shall be reduced below the stated values in paragraphs (b)(1), (b)(2), and (b)(3) of this section, as appropriate, by the amount in dB that the directional gain of the antenna exceeds 6 dBi.	
EUT Antenna:	Please see Internal photos
The antenna is PCB antenna. The best case gain of the antenna is 4.97dBi.	

7.2 Maximum Conducted Output Power

Test Requirement:	47 CFR Part 15C Section 15.247 (b)(3)
Test Method:	ANSI C63.10 2013
Test Setup:	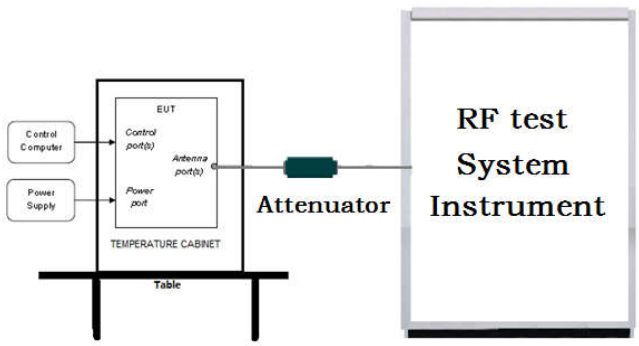
Test Procedure:	1. PKPM1 Peak power meter measurement The maximum peak conducted output power may be measured using a broadband peak RF power meter. The power meter shall have a video bandwidth that is greater than or equal to the DTS bandwidth and shall use a fast-responding diode detector. 2. Method AVGPM-G Average power measurement Method AVGPM-G is a measurement using a gated RF average power meter. Alternatively, measurements may be performed using a wideband gated RF power meter provided that the gate parameters are adjusted such that the power is measured only when the EUT is transmitting at its maximum power control level. Because the measurement is made only during the ON time of the transmitter, no duty cycle correction factor is required.
Limit:	30dBm
Test Mode:	Refer to clause 5.3
Test Results:	Refer to Appendix A

7.3 DTS Bandwidth

Test Requirement:	47 CFR Part 15C Section 15.247 (a)(2)
Test Method:	ANSI C63.10 2013
Test Setup:	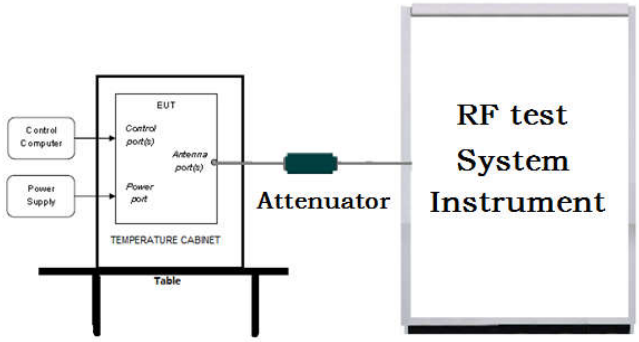 Remark: Offset=Cable loss+ attenuation factor.
Test Procedure:	a) Set RBW = 100 kHz. b) Set the VBW ⩾[3 × RBW]. c) Detector = peak. d) Trace mode = max hold. e) Sweep = auto couple. f) Allow the trace to stabilize. g) Measure the maximum width of the emission that is constrained by the frequencies associated with the two outermost amplitude points (upper and lower frequencies) that are attenuated by 6 dB relative to the maximum level measured in the fundamental emission.
Limit:	≥ 500 kHz
Test Mode:	Refer to clause 5.3
Test Results:	Refer to Appendix A

7.4 Maximum Power Spectral Density

Test Requirement:	47 CFR Part 15C Section 15.247 (e)
Test Method:	ANSI C63.10 2013
Test Setup:	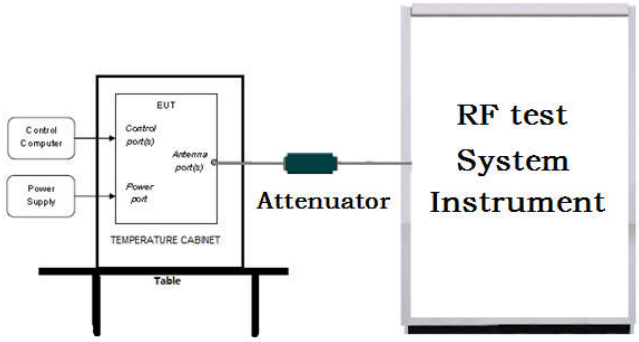 Remark: Offset=Cable loss+ attenuation factor.
Test Procedure:	a) Set analyzer center frequency to DTS channel center frequency. b) Set the span to 1.5 times the DTS bandwidth. c) Set the RBW to 3 kHz ＜ RBW ＜ 100 kHz. d) Set the VBW ＞ [3 × RBW]. e) Detector = peak. f) Sweep time = auto couple. g) Trace mode = max hold. h) Allow trace to fully stabilize. i) Use the peak marker function to determine the maximum amplitude level within the RBW. j) If measured value exceeds requirement, then reduce RBW (but no less than 3 kHz) and repeat.
Limit:	≤8.00dBm/3kHz
Test Mode:	Refer to clause 5.3
Test Results:	Refer to Appendix A

7.5 Band Edge Measurements and Conducted Spurious Emission

Test Requirement:	47 CFR Part 15C Section 15.247 (d)
Test Method:	ANSI C63.10 2013
Test Setup:	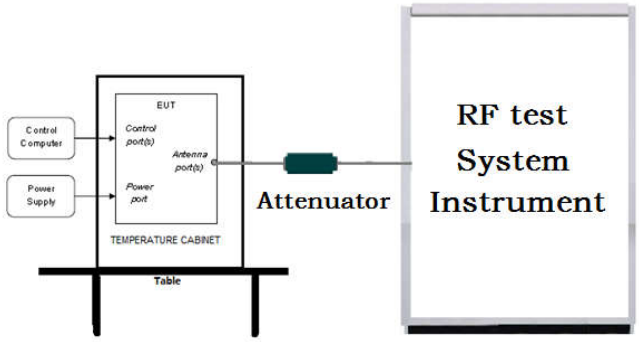 Remark: Offset=Cable loss+ attenuation factor.
Test Procedure:	a) Set RBW = 100KHz. b) Set VBW = 300KHz. c) Sweep time = auto couple. d) Detector = peak. e) Trace mode = max hold. f) Allow trace to fully stabilize. g) Use peak marker function to determine the peak amplitude level.
Limit:	In any 100 kHz bandwidth outside the frequency band in which the spread spectrum intentional radiator is operating, the radio frequency power that is produced by the intentional radiator shall be at least 20 dB below that in the 100 kHz bandwidth within the band that contains the highest level of the desired power, based on either an RF conducted or a radiated measurement.
Test Mode:	Refer to clause 5.3
Test Results:	Refer to Appendix A

7.6 Radiated Spurious Emission & Restricted bands

Test Requirement:	47 CFR Part 15C Section 15.209 and 15.205
Test Method:	ANSI C63.10 2013
Test Site:	Measurement Distance: 3m (Semi-Anechoic Chamber)
Receiver Setup:	

Frequency	Detector	RBW	VBW	Remark
0.009MHz-0.090MHz	Peak	10kHz	30kHz	Peak
0.009MHz-0.090MHz	Average	10kHz	30kHz	Average
0.090MHz-0.110MHz	Quasi-peak	10kHz	30kHz	Quasi-peak
0.110MHz-0.490MHz	Peak	10kHz	30kHz	Peak
0.110MHz-0.490MHz	Average	10kHz	30kHz	Average
0.490MHz -30MHz	Quasi-peak	10kHz	30kHz	Quasi-peak
30MHz-1GHz	Quasi-peak	100 kHz	300kHz	Quasi-peak
Above 1GHz	Peak	1MHz	3MHz	Peak
	Peak	1MHz	10kHz	Average

Limit:

Frequency	Field strength (microvolt/meter)	Limit (dBuV/m)	Remark	Measurement distance (m)
0.009MHz-0.490MHz	2400/F(kHz)	-	-	300
0.490MHz-1.705MHz	24000/F(kHz)	-	-	30
1.705MHz-30MHz	30	-	-	30
30MHz-88MHz	100	40.0	Quasi-peak	3
88MHz-216MHz	150	43.5	Quasi-peak	3
216MHz-960MHz	200	46.0	Quasi-peak	3
960MHz-1GHz	500	54.0	Quasi-peak	3
Above 1GHz	500	54.0	Average	3

Note: 15.35(b), Unless otherwise specified, the limit on peak radio frequency emissions is 20dB above the maximum permitted average emission limit applicable to the equipment under test. This peak limit applies to the total peak emission level radiated by the device.

Test Setup:	

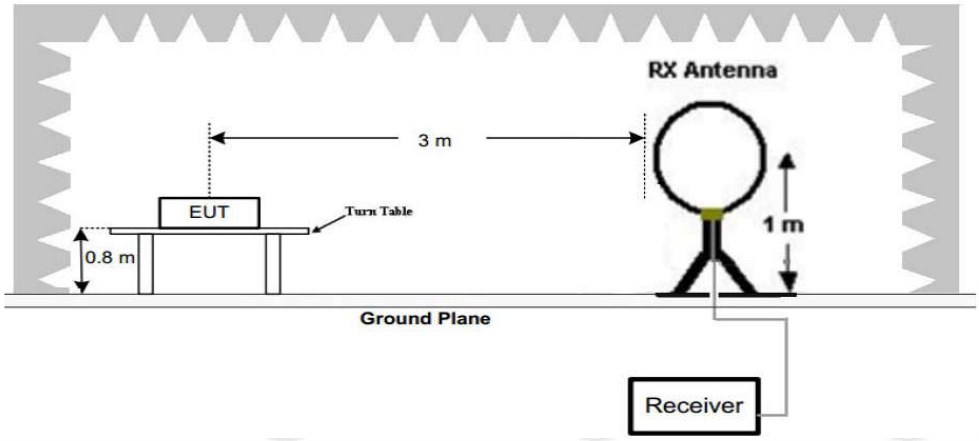

Figure 1. Below 30MHz

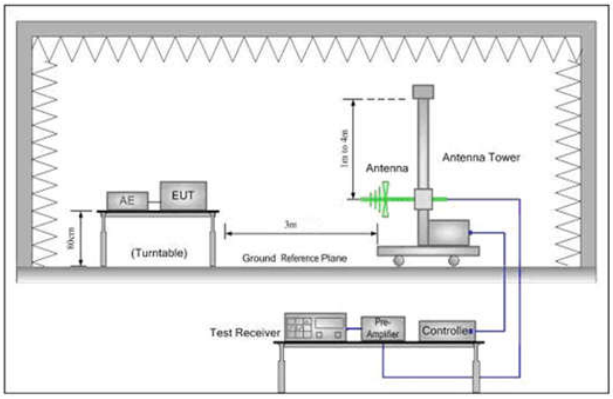

Figure 2. 30MHz to 1GHz

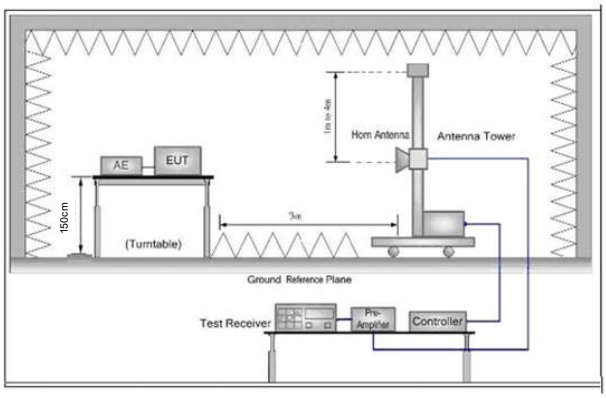

Figure 3. Above 1 GHz

Test Procedure:	a. 1) Below 1G: The EUT was placed on the top of a rotating table 0.8 meters above the ground at a 3 meter semi-anechoic camber. The table was rotated 360 degrees to determine the position of the highest radiation. 2) Above 1G: The EUT was placed on the top of a rotating table 1.5 meters above the ground at a 3 meter semi-anechoic camber. The table was rotated 360 degrees to determine the position of the highest radiation. Note: For the radiated emission test above 1GHz: Place the measurement antenna away from each area of the EUT determined to be a source of emissions at the specified measurement distance, while keeping the measurement antenna aimed at the source of emissions at each frequency of significant emissions, with polarization oriented for maximum response. The measurement antenna may have to be higher or lower than the EUT, depending on the radiation pattern of the emission and staying aimed at the emission source for receiving the maximum signal. The final measurement antenna elevation shall be that which maximizes the emissions. The measurement antenna elevation for maximum emissions shall be restricted to a range of heights of from 1 m to 4 m above the ground or reference ground plane. b. The EUT was set 3 meters away from the interference-receiving antenna, which was mounted on the top of a variable-height antenna tower. c. The antenna height is varied from one meter to four meters above the ground to determine the maximum value of the field strength. Both

	horizontal and vertical polarizations of the antenna are set to make the measurement. d. For each suspected emission, the EUT was arranged to its worst case and then the antenna was tuned to heights from 1 meter to 4 meters (for the test frequency of below 30MHz, the antenna was tuned to heights 1 meter) and the rotatable table was turned from 0 degrees to 360 degrees to find the maximum reading. e. The test-receiver system was set to Peak Detect Function and Specified Bandwidth with Maximum Hold Mode. f. If the emission level of the EUT in peak mode was 10dB lower than the limit specified, then testing could be stopped and the peak values of the EUT would be reported. Otherwise the emissions that did not have 10dB margin would be re-tested one by one using peak, quasi-peak or average method as specified and then reported in a data sheet. g. Test the EUT in the lowest channel (2402MHz),the middle channel (2440MHz),the Highest channel (2480MHz) h. The radiation measurements are performed in X, Y, Z axis positioning for Transmitting mode, and found the X axis positioning which it is the worst case. i. Repeat above procedures until all frequencies measured was complete.
Test Mode:	Refer to clause 5.3
Test Results:	Pass

Radiated Spurious Emission below 1GHz:

During the test, the Radiates Emission from 30MHz to 1GHz was performed in all modes, only the worst case middle channel of 1Mbps for 802.11g was recorded in the report.

Test Graph

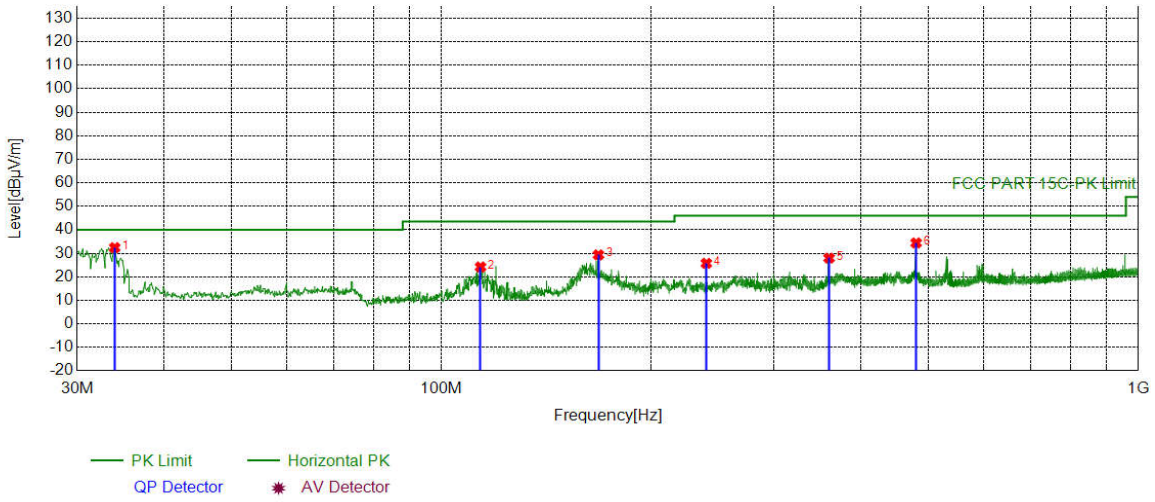

NO	Freq. [MHz]	Factor [dB]	Reading [dBµV]	Level [dBµV/m]	Limit [dBµV/m]	Margin [dB]	Result	Polarity	Remark
1	33.9774	-19.64	52.06	32.42	40.00	7.58	PASS	Horizontal	PK
2	113.8164	-19.03	43.23	24.20	43.50	19.30	PASS	Horizontal	PK
3	168.0448	-20.59	49.93	29.34	43.50	14.16	PASS	Horizontal	PK
4	240.0260	-16.77	42.51	25.74	46.00	20.26	PASS	Horizontal	PK
5	360.0270	-13.80	41.76	27.96	46.00	18.04	PASS	Horizontal	PK
6	480.0280	-11.20	45.62	34.42	46.00	11.58	PASS	Horizontal	PK

Test Graph

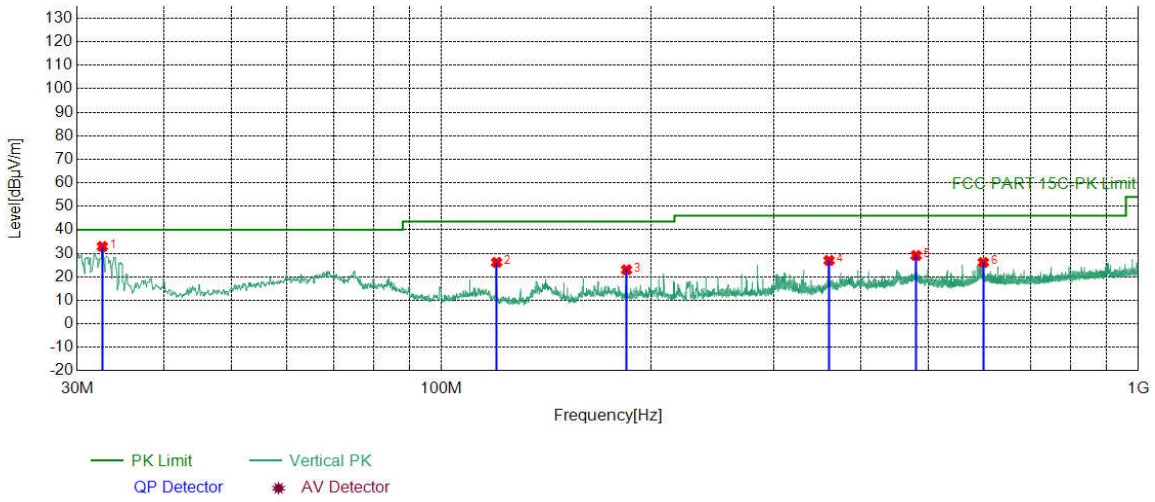

NO	Freq. [MHz]	Factor [dB]	Reading [dBµV]	Level [dBµV/m]	Limit [dBµV/m]	Margin [dB]	Result	Polarity	Remark
1	32.6193	-19.69	52.58	32.89	40.00	7.11	PASS	Vertical	PK
2	120.0250	-20.08	46.23	26.15	43.50	17.35	PASS	Vertical	PK
3	184.3424	-19.36	42.36	23.00	43.50	20.50	PASS	Vertical	PK
4	360.0270	-13.80	40.75	26.95	46.00	19.05	PASS	Vertical	PK
5	480.0280	-11.20	40.27	29.07	46.00	16.93	PASS	Vertical	PK
6	599.2529	-8.65	34.76	26.11	46.00	19.89	PASS	Vertical	PK

Radiated Spurious Emission above 1GHz:

Mode:			802.11b Transmitting			Channel:		2412 MHz	
NO	Freq. [MHz]	Factor [dB]	Reading [dBμV]	Level [dBμV/m]	Limit [dBμV/m]	Margin [dB]	Result	Polarity	Remark
1	1543.8544	1.83	42.63	44.46	74.00	29.54	Pass	H	PK
2	1973.6974	4.41	42.63	47.04	74.00	26.96	Pass	H	PK
3	3984.0656	-18.92	61.01	42.09	74.00	31.91	Pass	H	PK
4	4824.1216	-16.22	60.39	44.17	74.00	29.83	Pass	H	PK
5	7235.2824	-11.79	55.40	43.61	74.00	30.39	Pass	H	PK
6	11949.5966	-5.54	53.49	47.95	74.00	26.05	Pass	H	PK
7	1453.4453	1.43	42.16	43.59	74.00	30.41	Pass	V	PK
8	2018.7019	4.61	42.07	46.68	74.00	27.32	Pass	V	PK
9	3998.0665	-18.89	66.54	47.65	74.00	26.35	Pass	V	PK
10	6372.2248	-12.88	55.94	43.06	74.00	30.94	Pass	V	PK
11	9233.4156	-7.90	53.98	46.08	74.00	27.92	Pass	V	PK
12	13146.6764	-3.41	52.26	48.85	74.00	25.15	Pass	V	PK

Mode:			802.11b Transmitting			Channel:		2442 MHz	
NO	Freq. [MHz]	Factor [dB]	Reading [dBμV]	Level [dBμV/m]	Limit [dBμV/m]	Margin [dB]	Result	Polarity	Remark
1	2131.3131	4.54	43.25	47.79	74.00	26.21	Pass	H	PK
2	3998.0665	-18.89	61.43	42.54	74.00	31.46	Pass	H	PK
3	4884.1256	-16.20	59.14	42.94	74.00	31.06	Pass	H	PK
4	6863.2576	-12.04	53.93	41.89	74.00	32.11	Pass	H	PK
5	9320.4214	-7.96	53.17	45.21	74.00	28.79	Pass	H	PK
6	12432.6288	-4.74	53.60	48.86	74.00	25.14	Pass	H	PK
7	2019.5020	4.61	40.49	45.10	74.00	28.90	Pass	V	PK
8	4263.0842	-17.52	60.78	43.26	74.00	30.74	Pass	V	PK
9	5316.1544	-14.77	58.85	44.08	74.00	29.92	Pass	V	PK
10	8502.3668	-10.55	60.36	49.81	74.00	24.19	Pass	V	PK
11	11834.5890	-6.01	54.06	48.05	74.00	25.95	Pass	V	PK
12	14336.7558	0.17	50.90	51.07	74.00	22.93	Pass	V	PK

Mode:			802.11b Transmitting			Channel:		2472 MHz	
NO	Freq. [MHz]	Factor [dB]	Reading [dBμV]	Level [dBμV/m]	Limit [dBμV/m]	Margin [dB]	Result	Polarity	Remark
1	1838.4838	3.57	40.44	44.01	74.00	29.99	Pass	H	PK
2	3999.0666	-18.89	59.19	40.30	74.00	33.70	Pass	H	PK
3	6310.2207	-12.91	54.15	41.24	74.00	32.76	Pass	H	PK
4	7701.3134	-11.04	54.57	43.53	74.00	30.47	Pass	H	PK
5	9873.4582	-7.15	53.17	46.02	74.00	27.98	Pass	H	PK
6	13705.7137	-1.76	51.33	49.57	74.00	24.43	Pass	H	PK
7	1863.4863	3.76	40.88	44.64	74.00	29.36	Pass	V	PK
8	4255.0837	-17.58	62.46	44.88	74.00	29.12	Pass	V	PK
9	5311.1541	-14.78	58.18	43.40	74.00	30.60	Pass	V	PK
10	6390.2260	-12.87	56.85	43.98	74.00	30.02	Pass	V	PK
11	8503.3669	-10.54	55.25	44.71	74.00	29.29	Pass	V	PK
12	11912.5942	-5.76	53.85	48.09	74.00	25.91	Pass	V	PK

Mode:			802.11g Transmitting			Channel:		2412 MHz	
NO	Freq. [MHz]	Factor [dB]	Reading [dBμV]	Level [dBμV/m]	Limit [dBμV/m]	Margin [dB]	Result	Polarity	Remark
1	1189.2189	0.81	43.48	44.29	74.00	29.71	Pass	H	PK
2	1937.0937	4.22	41.70	45.92	74.00	28.08	Pass	H	PK
3	4250.0833	-17.62	58.64	41.02	74.00	32.98	Pass	H	PK
4	6980.2654	-11.82	55.30	43.48	74.00	30.52	Pass	H	PK
5	10576.5051	-6.57	53.65	47.08	74.00	26.92	Pass	H	PK
6	14395.7597	1.15	49.11	50.26	74.00	23.74	Pass	H	PK
7	1147.6148	0.83	43.44	44.27	74.00	29.73	Pass	V	PK
8	2130.7131	4.55	44.09	48.64	74.00	25.36	Pass	V	PK
9	4258.0839	-17.56	61.49	43.93	74.00	30.07	Pass	V	PK
10	6646.2431	-12.67	56.75	44.08	74.00	29.92	Pass	V	PK
11	10790.5194	-6.25	52.74	46.49	74.00	27.51	Pass	V	PK
12	14392.7595	1.10	49.89	50.99	74.00	23.01	Pass	V	PK

Mode:			802.11g Transmitting			Channel:		2442 MHz	
NO	Freq. [MHz]	Factor [dB]	Reading [dBμV]	Level [dBμV/m]	Limit [dBμV/m]	Margin [dB]	Result	Polarity	Remark
1	1649.2649	2.61	41.16	43.77	74.00	30.23	Pass	H	PK
2	4252.0835	-17.61	58.61	41.00	74.00	33.00	Pass	H	PK
3	5967.1978	-13.17	54.50	41.33	74.00	32.67	Pass	H	PK
4	7330.2887	-11.64	55.01	43.37	74.00	30.63	Pass	H	PK
5	10293.4862	-6.50	53.18	46.68	74.00	27.32	Pass	H	PK
6	14381.7588	0.92	50.57	51.49	74.00	22.51	Pass	H	PK
7	2052.5053	4.72	40.47	45.19	74.00	28.81	Pass	V	PK
8	3726.0484	-19.74	58.03	38.29	74.00	35.71	Pass	V	PK
9	4258.0839	-17.56	68.35	50.79	74.00	23.21	Pass	V	PK
10	5165.1443	-14.90	75.74	60.84	74.00	13.16	Pass	V	PK
11	5167.1445	-14.88	63.59	48.71	54.00	5.29	Pass	V	AV
12	10254.4836	-6.76	53.35	46.59	74.00	27.41	Pass	V	PK
13	13759.7173	-1.69	51.38	49.69	74.00	24.31	Pass	V	PK

Mode:			802.11g Transmitting			Channel:		2472 MHz	
NO	Freq. [MHz]	Factor [dB]	Reading [dBμV]	Level [dBμV/m]	Limit [dBμV/m]	Margin [dB]	Result	Polarity	Remark
1	1426.2426	1.41	42.24	43.65	74.00	30.35	Pass	H	PK
2	2124.3124	4.61	45.87	50.48	74.00	23.52	Pass	H	PK
3	4262.0841	-17.53	59.16	41.63	74.00	32.37	Pass	H	PK
4	6400.2267	-12.86	57.02	44.16	74.00	29.84	Pass	H	PK
5	9217.4145	-7.89	52.80	44.91	74.00	29.09	Pass	H	PK
6	14366.7578	0.67	50.69	51.36	74.00	22.64	Pass	H	PK
7	2130.3130	4.55	43.31	47.86	74.00	26.14	Pass	V	PK
8	4255.0837	-17.58	66.70	49.12	74.00	24.88	Pass	V	PK
9	5331.1554	-14.73	57.26	42.53	74.00	31.47	Pass	V	PK
10	6655.2437	-12.64	56.09	43.45	74.00	30.55	Pass	V	PK
11	10300.4867	-6.46	52.15	45.69	74.00	28.31	Pass	V	PK
12	14362.7575	0.60	50.37	50.97	74.00	23.03	Pass	V	PK

Mode:			802.11n(HT20) Transmitting			Channel:		2412 MHz	
NO	Freq. [MHz]	Factor [dB]	Reading [dBμV]	Level [dBμV/m]	Limit [dBμV/m]	Margin [dB]	Result	Polarity	Remark
1	1432.0432	1.42	42.46	43.88	74.00	30.12	Pass	H	PK
2	2125.9126	4.60	43.57	48.17	74.00	25.83	Pass	H	PK
3	3866.0577	-19.15	58.06	38.91	74.00	35.09	Pass	H	PK
4	5786.1857	-13.62	56.13	42.51	74.00	31.49	Pass	H	PK
5	7640.3094	-11.15	54.38	43.23	74.00	30.77	Pass	H	PK
6	11453.5636	-6.18	52.86	46.68	74.00	27.32	Pass	H	PK
7	1028.8029	0.92	43.07	43.99	74.00	30.01	Pass	V	PK
8	1554.2554	1.91	41.72	43.63	74.00	30.37	Pass	V	PK
9	2004.7005	4.57	42.66	47.23	74.00	26.77	Pass	V	PK
10	3997.0665	-18.90	63.05	44.15	74.00	29.85	Pass	V	PK
11	6970.2647	-11.82	56.49	44.67	74.00	29.33	Pass	V	PK
12	12667.6445	-4.64	53.72	49.08	74.00	24.92	Pass	V	PK

Mode:			802.11n(HT20) Transmitting			Channel:		2442 MHz	
NO	Freq. [MHz]	Factor [dB]	Reading [dBμV]	Level [dBμV/m]	Limit [dBμV/m]	Margin [dB]	Result	Polarity	Remark
1	1747.4747	3.10	41.01	44.11	74.00	29.89	Pass	H	PK
2	4262.0841	-17.53	59.54	42.01	74.00	31.99	Pass	H	PK
3	5589.1726	-14.30	55.16	40.86	74.00	33.14	Pass	H	PK
4	6986.2658	-11.82	56.85	45.03	74.00	28.97	Pass	H	PK
5	10813.5209	-6.25	53.00	46.75	74.00	27.25	Pass	H	PK
6	14346.7565	0.34	50.54	50.88	74.00	23.12	Pass	H	PK
7	1597.4597	2.27	42.51	44.78	74.00	29.22	Pass	V	PK
8	1980.8981	4.45	40.40	44.85	74.00	29.15	Pass	V	PK
9	4256.0837	-17.58	64.80	47.22	74.00	26.78	Pass	V	PK
10	6663.2442	-12.61	56.04	43.43	74.00	30.57	Pass	V	PK
11	10206.4804	-7.09	52.70	45.61	74.00	28.39	Pass	V	PK
12	14400.7601	1.21	48.67	49.88	74.00	24.12	Pass	V	PK

Mode:			802.11n(HT20) Transmitting			Channel:		2472 MHz	
NO	Freq. [MHz]	Factor [dB]	Reading [dBμV]	Level [dBμV/m]	Limit [dBμV/m]	Margin [dB]	Result	Polarity	Remark
1	1973.6974	4.41	40.72	45.13	74.00	28.87	Pass	H	PK
2	4258.0839	-17.56	62.15	44.59	74.00	29.41	Pass	H	PK
3	5698.1799	-13.93	55.66	41.73	74.00	32.27	Pass	H	PK
4	7093.2729	-11.60	55.70	44.10	74.00	29.90	Pass	H	PK
5	9179.4120	-8.05	53.70	45.65	74.00	28.35	Pass	H	PK
6	11303.5536	-6.61	54.76	48.15	74.00	25.85	Pass	H	PK
7	1952.0952	4.30	40.82	45.12	74.00	28.88	Pass	V	PK
8	4250.0833	-17.62	67.00	49.38	74.00	24.62	Pass	V	PK
9	5332.1555	-14.72	58.83	44.11	74.00	29.89	Pass	V	PK
10	6958.2639	-11.82	53.52	41.70	74.00	32.30	Pass	V	PK
11	8528.3686	-10.49	54.60	44.11	74.00	29.89	Pass	V	PK
12	11727.5818	-6.21	53.67	47.46	74.00	26.54	Pass	V	PK

Mode:			802.11n(HT40) Transmitting			Channel:		2422 MHz	
NO	Freq. [MHz]	Factor [dB]	Reading [dBμV]	Level [dBμV/m]	Limit [dBμV/m]	Margin [dB]	Result	Polarity	Remark
1	1102.8103	0.85	43.05	43.90	74.00	30.10	Pass	H	PK
2	2125.1125	4.61	44.68	49.29	74.00	24.71	Pass	H	PK
3	3207.0138	-20.31	58.53	38.22	74.00	35.78	Pass	H	PK
4	5991.1994	-13.02	54.81	41.79	74.00	32.21	Pass	H	PK
5	9251.4168	-7.92	53.23	45.31	74.00	28.69	Pass	H	PK
6	13732.7155	-1.72	50.99	49.27	74.00	24.73	Pass	H	PK
7	1100.4100	0.85	44.08	44.93	74.00	29.07	Pass	V	PK
8	1988.8989	4.49	41.87	46.36	74.00	27.64	Pass	V	PK
9	4262.0841	-17.53	63.64	46.11	74.00	27.89	Pass	V	PK
10	7040.2694	-11.72	55.81	44.09	74.00	29.91	Pass	V	PK
11	8505.3670	-10.54	56.72	46.18	74.00	27.82	Pass	V	PK
12	11356.5571	-6.35	53.48	47.13	74.00	26.87	Pass	V	PK

Mode:			802.11n(HT40) Transmitting			Channel:		2442 MHz	
NO	Freq. [MHz]	Factor [dB]	Reading [dBμV]	Level [dBμV/m]	Limit [dBμV/m]	Margin [dB]	Result	Polarity	Remark
1	1329.6330	1.16	43.60	44.76	74.00	29.24	Pass	H	PK
2	1788.2788	3.24	41.08	44.32	74.00	29.68	Pass	H	PK
3	4199.0799	-18.02	58.41	40.39	74.00	33.61	Pass	H	PK
4	5024.1349	-15.79	55.91	40.12	74.00	33.88	Pass	H	PK
5	9271.4181	-7.93	53.29	45.36	74.00	28.64	Pass	H	PK
6	14395.7597	1.15	48.58	49.73	74.00	24.27	Pass	H	PK
7	1327.8328	1.15	46.56	47.71	74.00	26.29	Pass	V	PK
8	1975.8976	4.42	42.47	46.89	74.00	27.11	Pass	V	PK
9	3994.0663	-18.90	58.87	39.97	74.00	34.03	Pass	V	PK
10	5991.1994	-13.02	61.02	48.00	74.00	26.00	Pass	V	PK
11	9227.4152	-7.90	53.26	45.36	74.00	28.64	Pass	V	PK
12	14396.7598	1.17	49.54	50.71	74.00	23.29	Pass	V	PK

Mode:			802.11n(HT40) Transmitting			Channel:		2462 MHz	
NO	Freq. [MHz]	Factor [dB]	Reading [dBμV]	Level [dBμV/m]	Limit [dBμV/m]	Margin [dB]	Result	Polarity	Remark
1	1331.2331	1.16	42.99	44.15	74.00	29.85	Pass	H	PK
2	1854.0854	3.69	40.60	44.29	74.00	29.71	Pass	H	PK
3	4438.0959	-17.01	57.85	40.84	74.00	33.16	Pass	H	PK
4	6153.2102	-13.18	54.62	41.44	74.00	32.56	Pass	H	PK
5	8956.3971	-8.79	52.12	43.33	74.00	30.67	Pass	H	PK
6	12582.6388	-4.24	53.11	48.87	74.00	25.13	Pass	H	PK
7	1332.2332	1.17	47.06	48.23	74.00	25.77	Pass	V	PK
8	3330.0220	-19.92	60.66	40.74	74.00	33.26	Pass	V	PK
9	5324.1549	-14.74	58.76	44.02	74.00	29.98	Pass	V	PK
10	7367.2912	-11.57	54.41	42.84	74.00	31.16	Pass	V	PK
11	10385.4924	-6.31	53.41	47.10	74.00	26.90	Pass	V	PK
12	13366.6911	-3.01	51.62	48.61	74.00	25.39	Pass	V	PK

Remark:

1) The field strength is calculated by adding the Antenna Factor, Cable Factor & Preamplifier. The basic equation with a sample calculation is as follows:

   Final Test Level =Receiver Reading + Antenna Factor + Cable Factor – Preamplifier Factor

2) Scan from 9kHz to 25GHz, the disturbance above 18GHz and below 30MHz was very low. As shown in this section, for frequencies above 1GHz, the field strength limits are based on average limits. However, the peak field strength of any emission shall not exceed the maximum permitted average limits specified above by more than 20 dB under any condition of modulation. So, only the peak measurements were shown in the report.

Restricted bands:

Test plot as follows:

Mode:	802.11b Transmitting	Channel:	2412 MHz
Remark:			

Test Graph

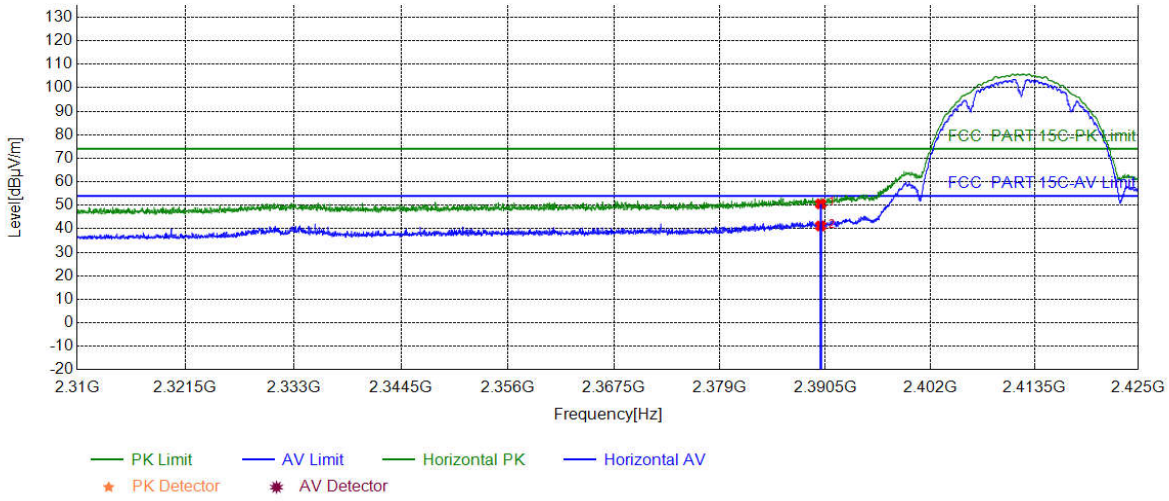

NO	Freq. [MHz]	Factor [dB]	Reading [dBµV]	Level [dBµV/m]	Limit [dBµV/m]	Margin [dB]	Result	Polarity	Remark
1	2390.0000	5.77	44.84	50.61	74.00	23.39	PASS	Horizontal	PK
2	2390.0000	5.77	35.46	41.23	54.00	12.77	PASS	Horizontal	AV

Mode:	802.11b Transmitting	Channel:	2412 MHz
Remark:			

Test Graph

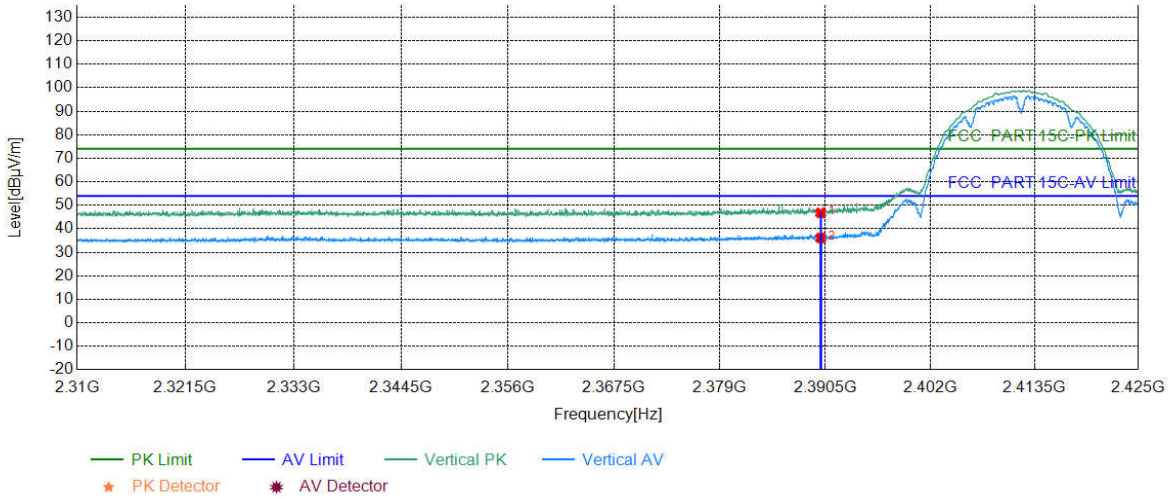

NO	Freq. [MHz]	Factor [dB]	Reading [dBµV]	Level [dBµV/m]	Limit [dBµV/m]	Margin [dB]	Result	Polarity	Remark
1	2390.0000	5.77	41.00	46.77	74.00	27.23	PASS	Vertical	PK
2	2390.0000	5.77	30.34	36.11	54.00	17.89	PASS	Vertical	AV

Mode:	802.11b Transmitting	Channel:	2472 MHz
Remark:			

Test Graph

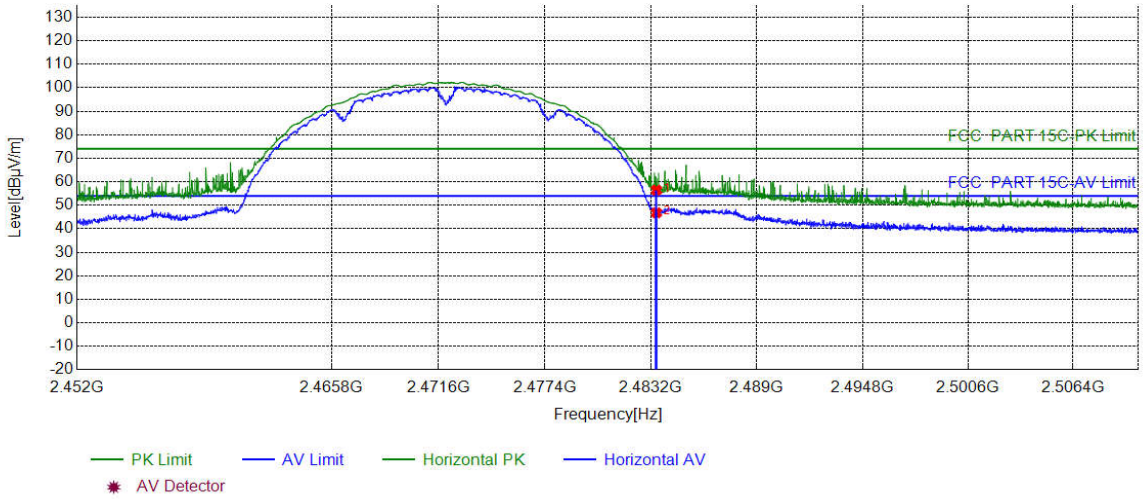

NO	Freq. [MHz]	Factor [dB]	Reading [dBµV]	Level [dBµV/m]	Limit [dBµV/m]	Margin [dB]	Result	Polarity	Remark
1	2483.5000	6.57	49.86	56.43	74.00	17.57	PASS	Horizontal	PK
2	2483.5000	6.57	40.25	46.82	54.00	7.18	PASS	Horizontal	AV

Mode:	802.11b Transmitting	Channel:	2472 MHz
Remark:			

Test Graph

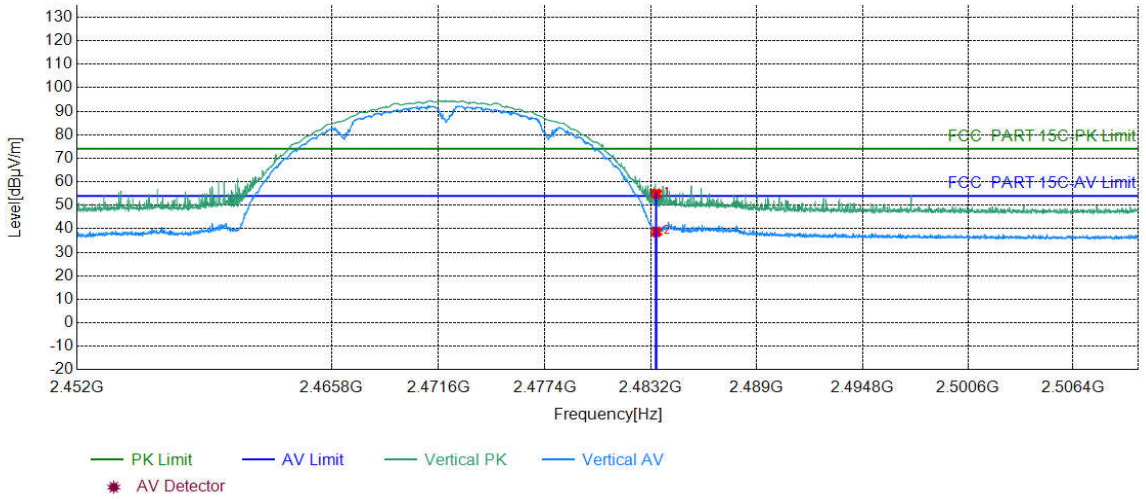

NO	Freq. [MHz]	Factor [dB]	Reading [dBµV]	Level [dBµV/m]	Limit [dBµV/m]	Margin [dB]	Result	Polarity	Remark
1	2483.5000	6.57	48.29	54.86	74.00	19.14	PASS	Vertical	PK
2	2483.5000	6.57	32.14	38.71	54.00	15.29	PASS	Vertical	AV

Mode:	802.11g Transmitting	Channel:	2412 MHz
Remark:			

Test Graph

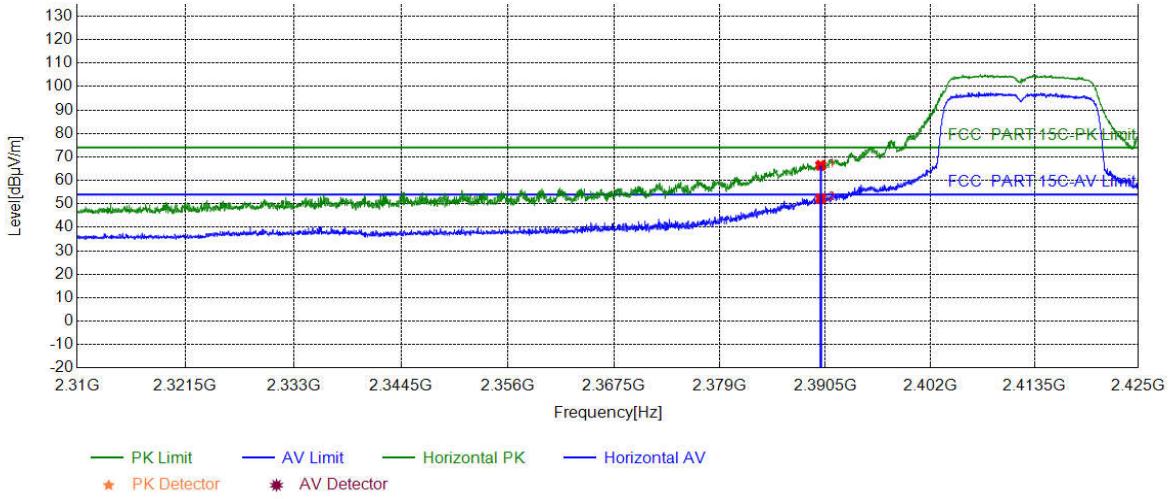

NO	Freq. [MHz]	Factor [dB]	Reading [dBµV]	Level [dBµV/m]	Limit [dBµV/m]	Margin [dB]	Result	Polarity	Remark
1	2390.0000	5.77	60.65	66.42	74.00	7.58	PASS	Horizontal	PK
2	2390.0000	5.77	44.46	50.23	54.00	3.77	PASS	Horizontal	AV

Mode:	802.11g Transmitting	Channel:	2412 MHz
Remark:			

Test Graph

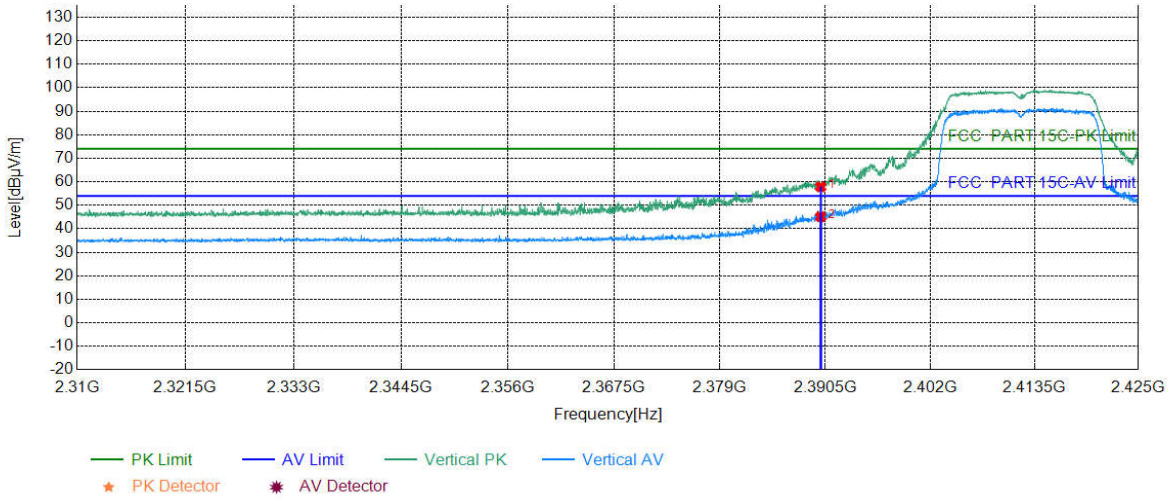

NO	Freq. [MHz]	Factor [dB]	Reading [dBµV]	Level [dBµV/m]	Limit [dBµV/m]	Margin [dB]	Result	Polarity	Remark
1	2390.0000	5.77	52.11	57.88	74.00	16.12	PASS	Vertical	PK
2	2390.0000	5.77	39.35	45.12	54.00	8.88	PASS	Vertical	AV

Mode:	802.11g Transmitting	Channel:	2472 MHz
Remark:			

Test Graph

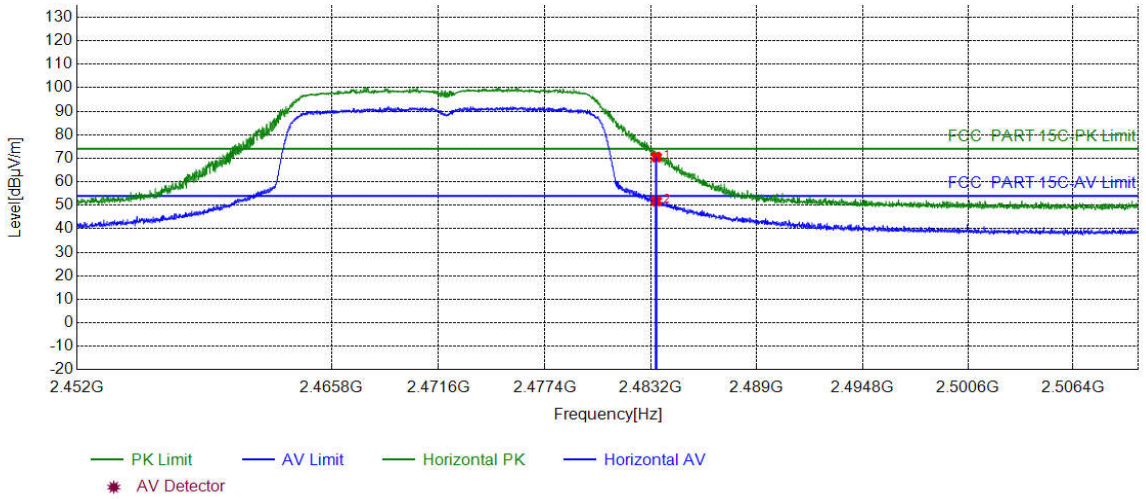

NO	Freq. [MHz]	Factor [dB]	Reading [dBµV]	Level [dBµV/m]	Limit [dBµV/m]	Margin [dB]	Result	Polarity	Remark
1	2483.5000	6.57	63.94	70.51	74.00	3.49	PASS	Horizontal	PK
2	2483.5000	6.57	45.23	51.80	54.00	2.20	PASS	Horizontal	AV

Mode:	802.11g Transmitting	Channel:	2472 MHz
Remark:			

Test Graph

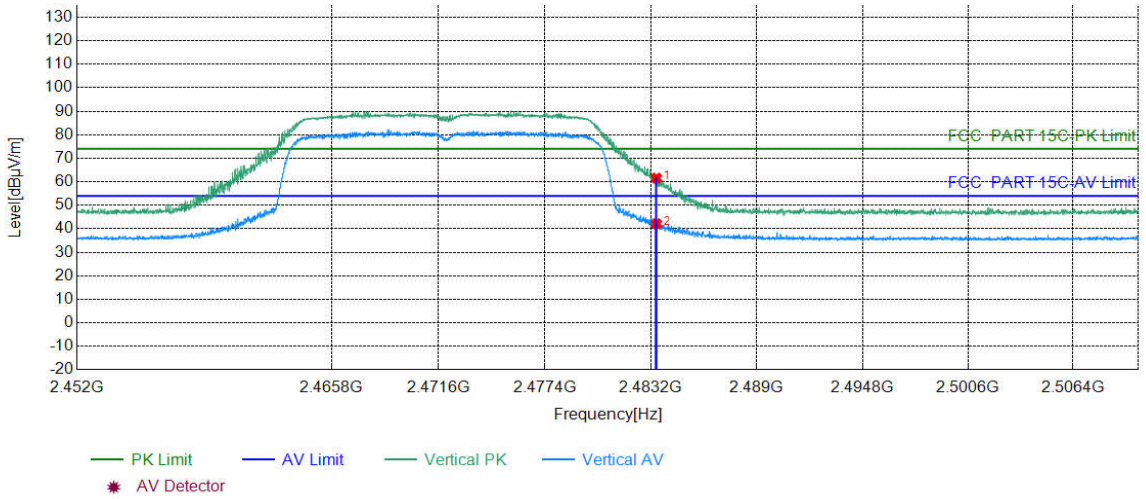

NO	Freq. [MHz]	Factor [dB]	Reading [dBµV]	Level [dBµV/m]	Limit [dBµV/m]	Margin [dB]	Result	Polarity	Remark
1	2483.5000	6.57	55.01	61.58	74.00	12.42	PASS	Vertical	PK
2	2483.5000	6.57	35.60	42.17	54.00	11.83	PASS	Vertical	AV

Mode:	802.11n(HT20) Transmitting	Channel:	2412 MHz
Remark:			

Test Graph

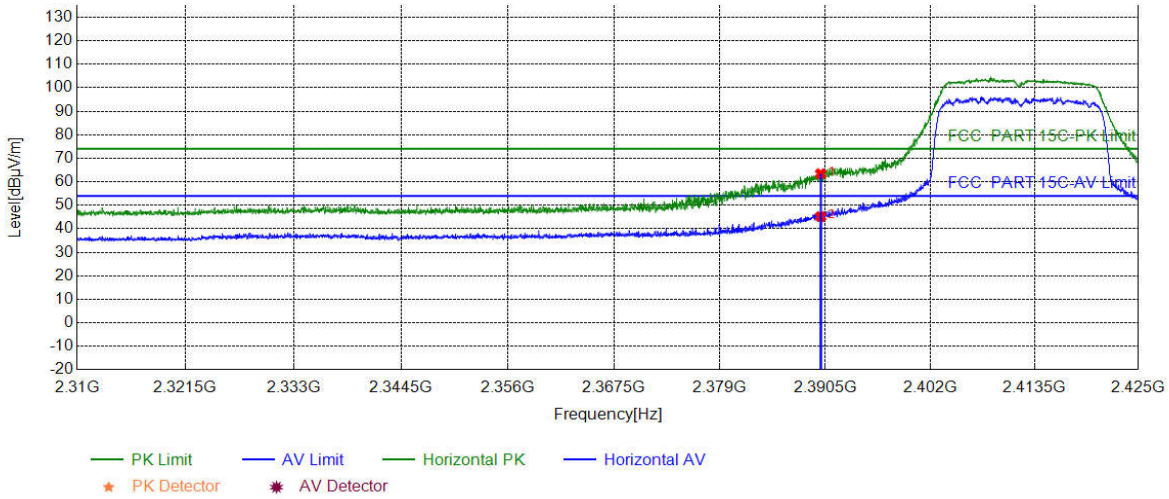

NO	Freq. [MHz]	Factor [dB]	Reading [dBμV]	Level [dBμV/m]	Limit [dBμV/m]	Margin [dB]	Result	Polarity	Remark
1	2390.0000	5.77	57.66	63.43	74.00	10.57	PASS	Horizontal	PK
2	2390.0000	5.77	39.40	45.17	54.00	8.83	PASS	Horizontal	AV

Mode:	802.11n(HT20) Transmitting	Channel:	2412 MHz
Remark:			

Test Graph

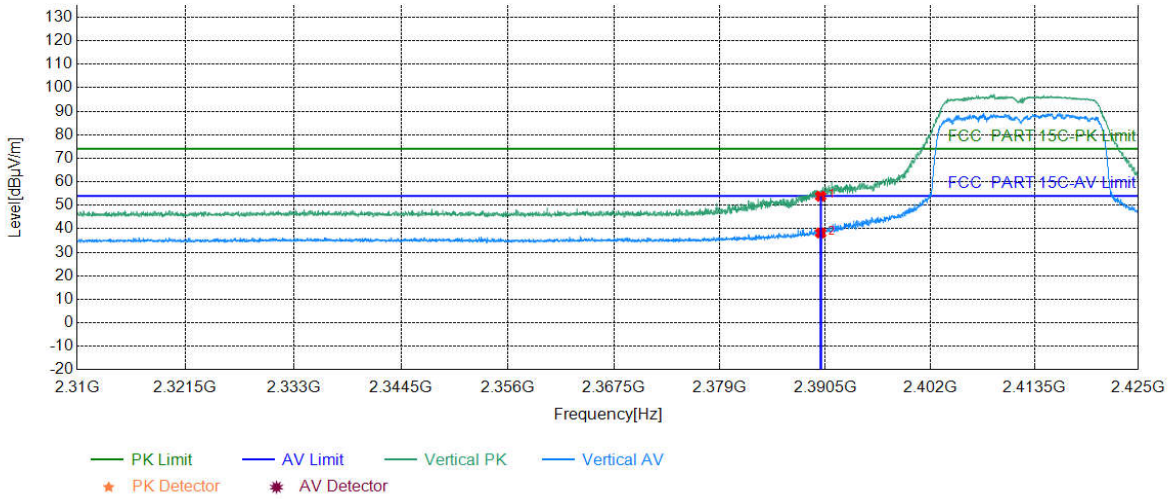

NO	Freq. [MHz]	Factor [dB]	Reading [dBμV]	Level [dBμV/m]	Limit [dBμV/m]	Margin [dB]	Result	Polarity	Remark
1	2390.0000	5.77	48.09	53.86	74.00	20.14	PASS	Vertical	PK
2	2390.0000	5.77	32.46	38.23	54.00	15.77	PASS	Vertical	AV

Mode:	80211 n(HT20) Transmitting	Channel:	2472 MHz
Remark:			

Test Graph

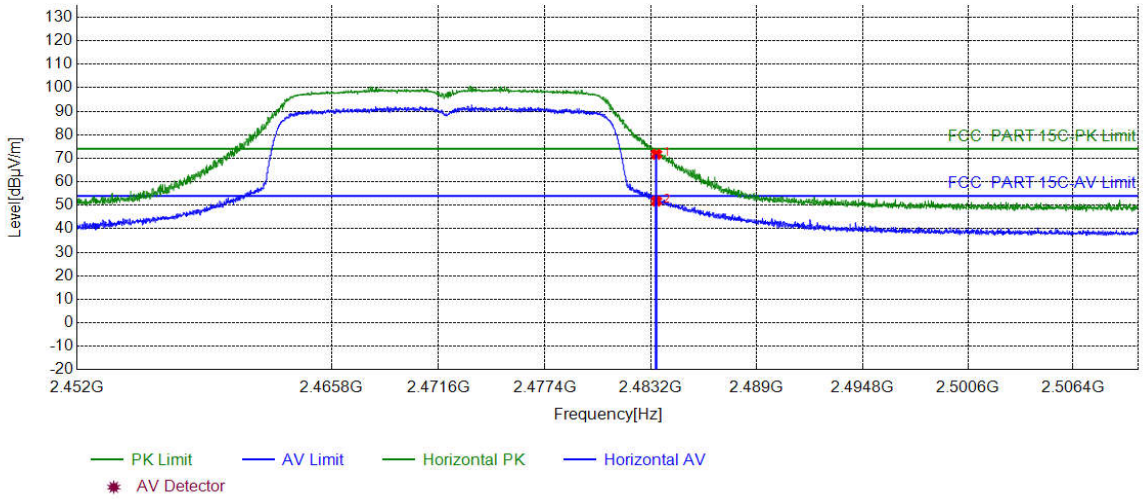

NO	Freq. [MHz]	Factor [dB]	Reading [dBµV]	Level [dBµV/m]	Limit [dBµV/m]	Margin [dB]	Result	Polarity	Remark
1	2483.5000	6.57	65.14	71.71	74.00	2.29	PASS	Horizontal	PK
2	2483.5000	6.57	45.21	51.78	54.00	2.22	PASS	Horizontal	AV

Mode:	802.11n(HT20) Transmitting	Channel:	2472 MHz
Remark:			

Test Graph

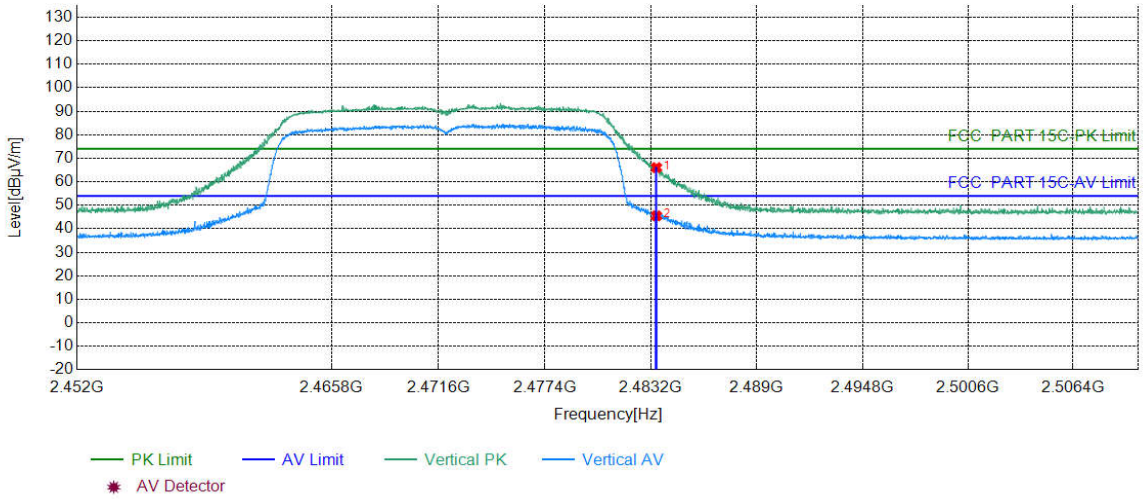

NO	Freq. [MHz]	Factor [dB]	Reading [dBµV]	Level [dBµV/m]	Limit [dBµV/m]	Margin [dB]	Result	Polarity	Remark
1	2483.5000	6.57	59.47	66.04	74.00	7.96	PASS	Vertical	PK
2	2483.5000	6.57	38.96	45.53	54.00	8.47	PASS	Vertical	AV

Mode:	802.11n(HT40) Transmitting	Channel:	2422 MHz
Remark:			

Test Graph

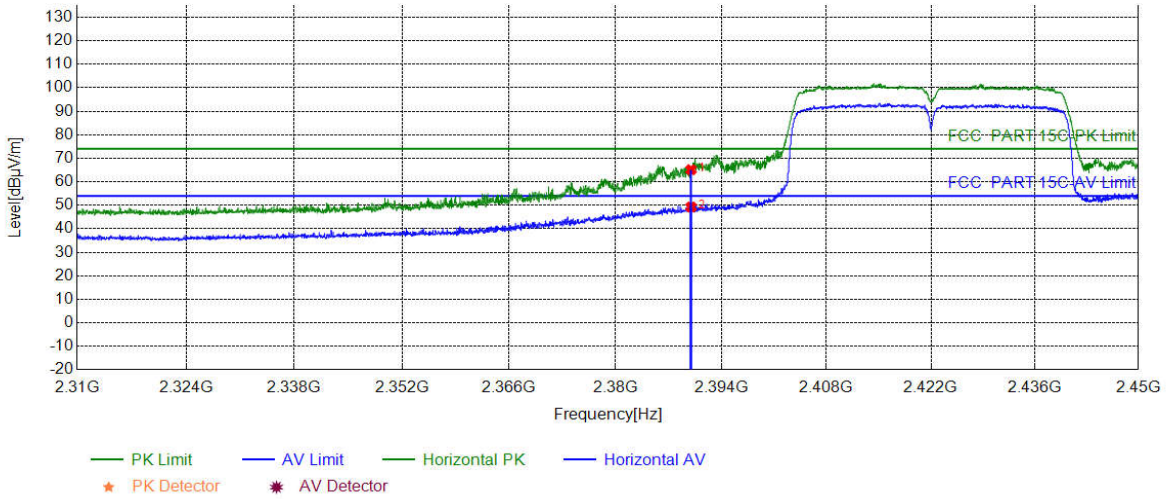

NO	Freq. [MHz]	Factor [dB]	Reading [dBμV]	Level [dBμV/m]	Limit [dBμV/m]	Margin [dB]	Result	Polarity	Remark
1	2390.0000	5.77	59.38	65.15	74.00	8.85	PASS	Horizontal	PK
2	2390.0000	5.77	43.51	49.28	54.00	4.72	PASS	Horizontal	AV

Mode:	802.11n(HT40) Transmitting	Channel:	2422 MHz
Remark:			

Test Graph

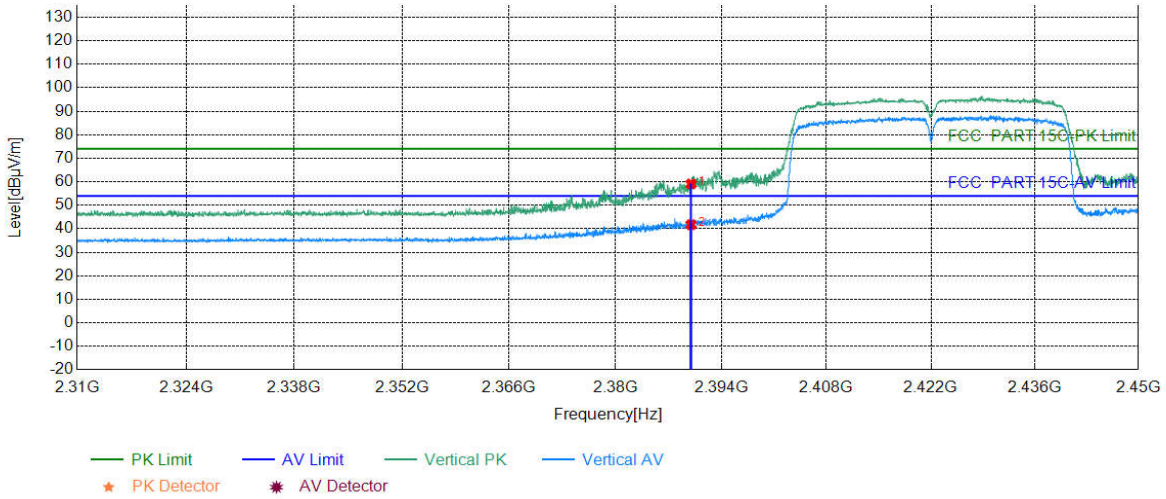

NO	Freq. [MHz]	Factor [dB]	Reading [dBμV]	Level [dBμV/m]	Limit [dBμV/m]	Margin [dB]	Result	Polarity	Remark
1	2390.0000	5.77	53.31	59.08	74.00	14.92	PASS	Vertical	PK
2	2390.0000	5.77	35.99	41.76	54.00	12.24	PASS	Vertical	AV

Mode:	802.11n(HT40) Transmitting	Channel:	2462 MHz
Remark:			

Test Graph

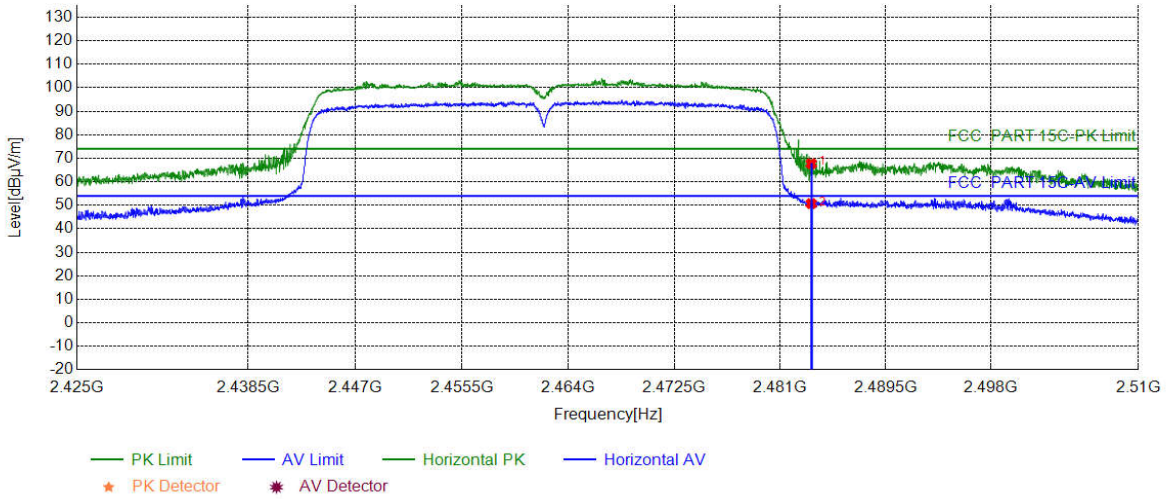

NO	Freq. [MHz]	Factor [dB]	Reading [dBµV]	Level [dBµV/m]	Limit [dBµV/m]	Margin [dB]	Result	Polarity	Remark
1	2483.5000	6.57	61.18	67.75	74.00	6.25	PASS	Horizontal	PK
2	2483.5000	6.57	44.15	50.72	54.00	3.28	PASS	Horizontal	AV

Mode:	802.11n(HT40) Transmitting	Channel:	2462 MHz
Remark:			

Test Graph

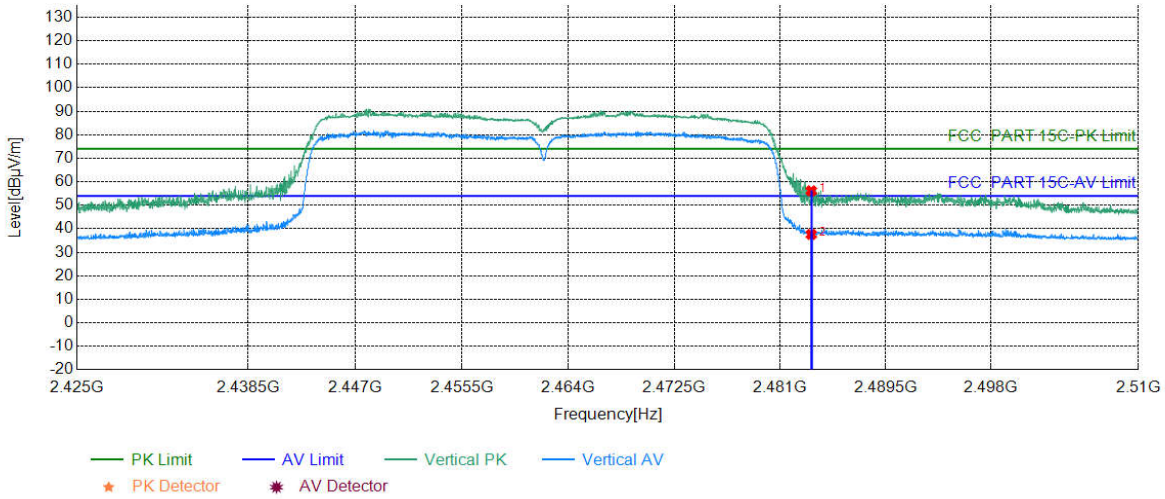

NO	Freq. [MHz]	Factor [dB]	Reading [dBµV]	Level [dBµV/m]	Limit [dBµV/m]	Margin [dB]	Result	Polarity	Remark
1	2483.5000	6.57	49.60	56.17	74.00	17.83	PASS	Vertical	PK
2	2483.5000	6.57	31.04	37.61	54.00	16.39	PASS	Vertical	AV

Note:
The field strength is calculated by adding the Antenna Factor, Cable Factor & Preamplifier. The basic equation with a sample calculation is as follows:
Final Test Level =Receiver Reading - Correct Factor
Correct Factor = Preamplifier Factor– Antenna Factor–Cable Factor

8 Appendix A

Refer to Appendix: 2.4G WIFI of EED32N80136902.