FIREFOX

6-AXIS GYRO 4 CHANNEL SERIES

RoHS

FIREFOX

14+

INSTRUCTION MANUAL

Contents

1	Important Note Additional Safety Precautions And Warnings
2	Warning And The Guide Of Using Battery
3	Helicopter Parameters Packaging List
4	Introduction of transmitter function PARTS
5	Batteries Charging Method first flight Preparation caution
6	Installation method of remote controller battery Direction of operation
7	Flight Operation Steps
8-9	Flight Yaw correction method
10	Parts replacement instructions
11	Abnormal Problem Solving Method

6 axis gyro mode, Barometer setting, flying ultra-stable, especially for beginners flight

Important Note FIREFOX

■ Please read the manual to learn the function of the this product before operation. Damage to the product and potential personal injury may occur if you make an operational error.

This is a RC helicopter, not a toy. You should not only have a prudent operation, but also to have an operational basis. All children using it should be under adult supervision. The manual includes safety, operation and maintenance. In order to avoid causing damage or serious injury, please obey the instructions and warnings before you using this product.

Additional Safety Precautions And Warnings FIREFOX

1.Recommended age of users: Not suitable for children under 14 years old.
2.Operate it in an open space, away from the traffic and people.
3.Obey the instructions and warnings, includes the use of optional equipment.
4.It has to stay away from chemicals. Small parts and electric equipment must be out of the reach of children.
5.Keep away from water because this product has no waterproof function.
6.Do not put any parts in the mouth, it will cause injury or death.
7.Don't operate the model if the transmitter's battery is in low voltage.
8.Don't view the beam of the light emitting diodes, it would effect the eyesight.
9.The motor and electric equipment will be heat after flight. Please do not touch them to avoid scald.
10.In order to avoid causing damage, please do not touch the high-speed.

重要说明 火狐

■ 操作前，请阅读整个说明书以便了解该产品的功能。未能正确地操作本产品可能会导致产品损坏，对人身财产造成严重损害。这是一个 的模型产品，而不是一玩具。 不仅要谨慎操作，还需要具备操作常识和操作基础。若未能安全使用该产品，会毁坏该产品或者对人身，或者对其他财产造成损失。本产品不供没有成人监督下的儿童直接使用。本手册内容包括安全、操作、维护。因此，在装配，安装或使用产品前。我们必须阅读并遵守本手册中所有的提示和警告,以便正确操作,避免造成损伤或严重伤害。

附加安全措施防范和警告 火狐

1. 年龄建议：不适合14岁以下的儿童，这不是一个玩具。
2. 始终在开放的空间操作你的模型，远离车辆、交通和人。
3. 必须仔细地遵循操作说明和警告，包括可选设备的使用方法。（充电器，可选充电电池等）
4. 始终保持远距离所有的化学品，细小部件跟用电设备需远离儿童接触。
5. 应避免与水接触，尤其此设备的设计不具备防水功能；水汽也会导致电子产品损害。
6. 切勿将模型的任何部件放在嘴里，因为它可能会导致严重受伤甚至死亡。
7. 当遥控器电池电压过低的时切勿操作你的模型。
8. 请勿直视发光二极管的光束，以免影响眼睛。
9. 飞行器在飞行中和飞行后，马达及电子元件会产生高温，请勿触摸，以免发生烫伤危险。
10. 请勿触碰高速旋转的螺旋桨，以免造成损伤。

Warning And The Guide Of Using Battery FIREFOX

Note: Using the original factory USB charger can ensure charging safety. Suggest you use the original factory USB charger part, other chargers may cause battery damage and property damage.

Warnings! The battery will fire, explode or leak if not strictly observing this item described below. :

1. Do not immerse the battery in water or seawater, and keep the battery in a cool dry environment during stands by period.
2. Keep all batteries out of the reach of little children. Consult a doctor immediately if a battery is swallowed.
3. Do not use or leave the battery near a heat source such as fire or heater.
4. Use the battery charger specifically for that purpose when recharging.
5. Do not reverse the positive (+) and negative (-) terminals.
6. Do not connect the battery to an electrical outlet.
7. Do not dispose the battery in fire or heat.
8. Do not short-circuit the battery by directly connecting the positive (+) and negative (-) terminals with metal objects such as wire.
9. Do not transport or store the battery together with metal objects such as necklaces, hairpins etc.
10. Do not strike or throw the battery against hard surface.
11. Do not directly solder the battery.
12. Do not unpack the battery with a nail or other sharp object.
13. Never disassembling the battery in any way.

Note: The battery can not be placed for a long time under full power and low power. Otherwise, the battery will not be charged or the battery will be wrapped. For long-term storage, please charge the battery to 3.7V and store it in a dry and safe place.

电池使用警告与向导 火狐

注意：FIREFOX 附带充电器可以安全的给电池充电，建议使用原厂的USB充电器。使用其它充电器有可能将电池充坏导致财产损失！

警告！不仔细阅读下述事项可能导致电池泄露、爆炸或起火：

1. 不能把电池进入水中，长时间不用时把电池放在阴凉和干燥的地方保存。
2. 电池应放在小孩接触不到的地方，如果小孩不小心吞咽电池应立即寻求医疗救济助。
3. 不能在产热源的附近使用或存放电池，比如火源或加热炉。
4. 充电时必需使用符合规格的充电器。
5. 请勿将正负板接反。
6. 请勿将电池直接连接到墙上插座或车载点烟式插座上。
7. 请勿将电池投入火中或给电池加热。
8. 禁止用导线或其它金属物体将电池正负极短路。
9. 禁止将电池与项链、发夹或其它金属物体一起运输或贮存。
10. 禁止撞击、投掷电池，使电池受到硬物撞击。
11. 禁止直接焊接电池端子。
12. 禁止用钉子或其它尖锐物体刺穿电池壳体，禁止锤击或脚踏电池。
13. 禁止以任何方式分解电池。

注意：电池不能在满电和低电状态下长期放置，否则会造成电池不能充电或者电池鼓包，长期放置请将电池充至3.7V电压，并在干燥安全的地方存放。

Helicopter Parameters FIREFOX

Length	268 mm
Height	80 mm
Weight	52G
Propeller length	249 mm
Tail Rotor blade Diameter	37 mm
Battery Specification	300mAh
Flight time	About 15 min
Main Motor	8520
Tail Motor	0615
Charge time	About 75 min

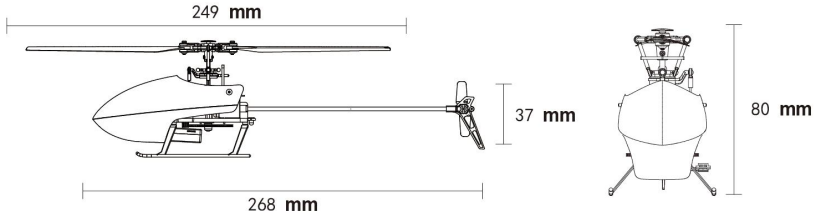

Packaging List FIREFOX

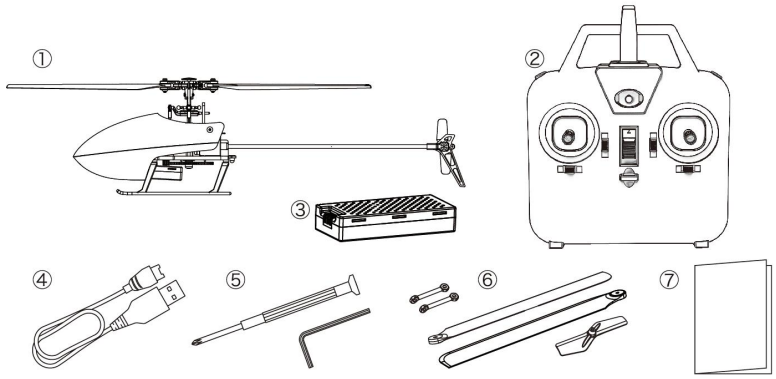

① Helicopter ② Remote Control ③ Lipo battery ④USB charger

⑤ Phillips screwdriver+hex wrench ⑥Upper connecting rod / Propeller / tail rotor ⑦ Instruction manual

飞机参数 火狐

长度	268 mm
高度	80 mm
重量	52G
主桨长度	249 mm
尾桨直径	37 mm
电池规格	300mAh
飞行时间	大约15分钟
主马达	8520
尾马达	0615
充电时间	75分钟

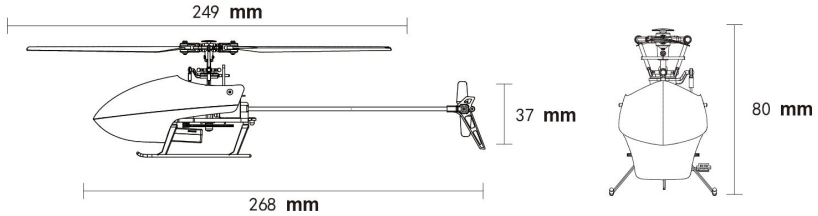

包装清单 火狐

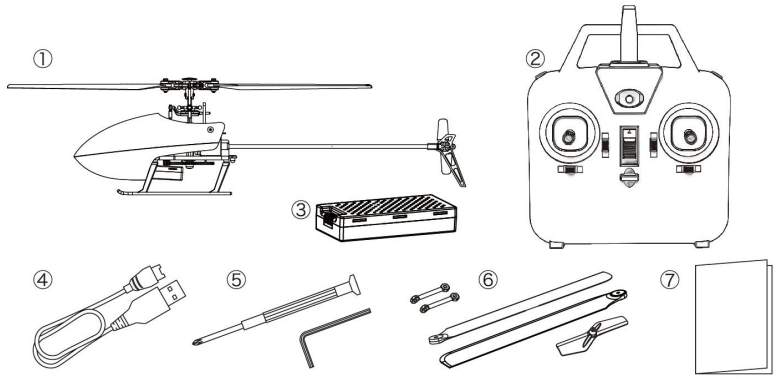

① 直升机 ② 遥控器 ③ 锂电池 ④USB充电器

⑤ 十字螺丝刀+六角扳手 ⑥上连杆/螺旋桨/尾桨 ⑦ 使用说明书

Introduction of transmitter function FIREFOX

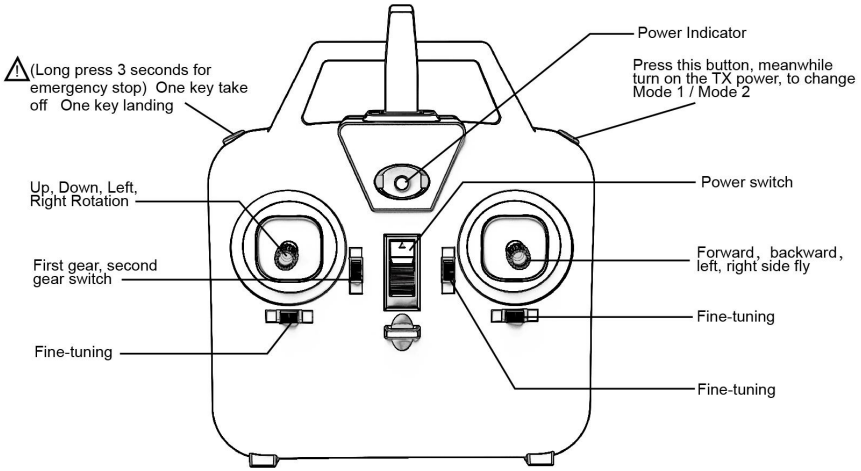

PARTS FIREFOX

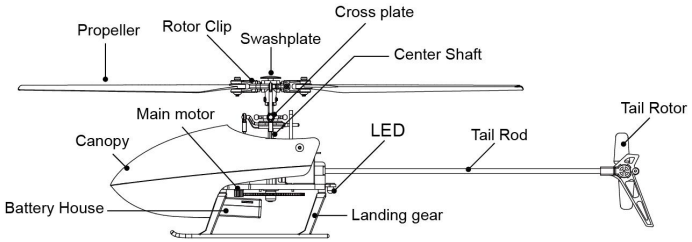

遥控器功能说明 火狐

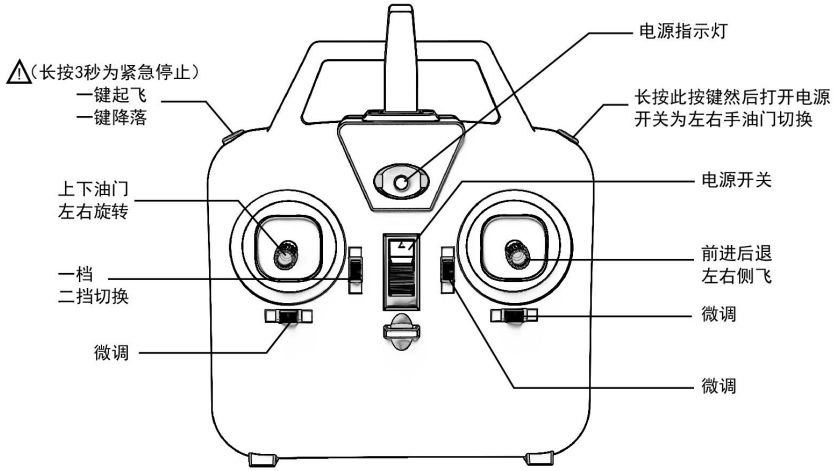

直升机零件名称 火狐

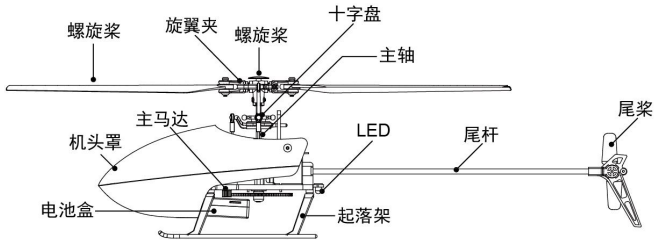

Abnormal Problem Solving Method FIREFOX

	Problem	Possible Cause	Solution
1	Connect the battery with helicopter, then the signal light keeps flashing and without response when operate.	The helicopter without bind with the transmitter.	Bind the transmitter again
2	The helicopter without any response when you connect the battery.	Check the power supply of helicopter and transmitter; Check the battery's voltage of the helicopter and transmitter; Batteries had a poor connecting.	Check the installation site of Transmitter's batteries; Use full voltage batteries; Install the batteries again; Confirm the batteries have a good connecting.
3	Push the throttle but the motor not at work, the receiver's signal light keep flashing	Helicopter's battery has a low voltage; The lipo battery has a poor connecting.	Charge the battery or change a full charge battery; Connect the battery with receiver again.
4	Turn on the helicopter after bind, the main blade can rotate but the helicopter can not take off	Helicopter has a low voltage; The main shaft and the gear may loose.	Charge the battery or change a full charge battery; Press the main shaft and gear tightly
5	The helicopter is violently shaking	Main rotor deformed cross shaft bent tail rotor bent Blade clamp screws are too tight to cause the main blade can not rotate	Change the main blade; Change the cross shaft; Change tail rotor; Loose the blade clamp screw.
6	Helicopter spinning to left after take off.	Tail motor has a poor power; The blades loose; Tail motor was broken.	Check the connection of tail blade and motor shaft. if loose, change tail blade or tail motor.
7	The helicopter has a little yaw:	made a operational error of the trimming button	1.According to its yaw direction, push the trimming button in the opposite direction; 2.Reset the hovering point.
8	The helicopter has a serious yaw.		Check the servo if work properly; Check the swash plate; Check the rod sticks if loosing.

异常问题解决方法 火狐

	状况	原因	对策
1	电池与接收机连接后，接收机提示灯持续闪烁，操作无反应。	发射机与接收机对码失败。	请重新执行发射机与接收机对码
2	电池与接收机连接后，直升机没有任何反应。	检查发射机与接收机是否接通电源；检查发射机与接收机电池电压。	打开发射机，确认电池安装位置；使用完全充饱电的电池；重新插入电池。
3	推动油门摇杆时，马达不转，且接收机提示灯开始闪烁。	直升机电池电压不足。	将电池充电或更换一个充饱电的电池。
4	对码成功后，起动直升机，主桨有持续转动，但不能飞。	直升机电池电压不足主轴齿轮松开。	将电池充电或更换一个充饱的电池, 将主轴与齿轮压紧。
5	直升机震动的很厉害。	主桨变形,横轴弯曲,尾桨变形， 桨夹螺丝锁太紧，导致主桨不动。	更换主桨, 更换横轴, 更换尾桨, 将桨夹螺丝适当拧松。
6	直升机起飞向左打转。	尾马达力量不足 桨叶松动 尾马达损坏	检查尾桨叶与马达轴的配合， 如果松动更换尾桨叶。马达损坏 更换尾马达.
7	起飞后飞机出现轻微偏航：	误操作微调键	1. 向偏航方向打微调，只到修正为止 2. 重新设置悬停
8	起飞后飞机出现严重偏航		1. 检查舵机是否工作正常 2. 检查十字盘是否正常 3. 检查连杆是否掉落

This device complies with Part 15 of the FCC Rules. Operation is subject to the following two conditions: (1) this device may not cause harmful interference, and (2) this device must accept any interference received, including interference that may cause undesired operation

NOTE: This equipment has been tested and found to comply with the limits for a Class B digital device, pursuant to Part 15 of the FCC Rules. These limits are designed to provide reasonable protection against harmful interference in a residential installation. This equipment generates, uses and can radiate radio frequency energy and, if not installed and used in accordance with the instructions, may cause harmful interference to radio communications. However, there is no guarantee that
interference will not occur in a particular installation.
If this equipment does cause harmful interference to radio or television reception, which can be determined by turning the equipment off and on, the user is encouraged to try to correct the interference by one or more of the following measures:
-- Reorient or relocate the receiving antenna.
-- Increase the separation between the equipment and receiver.
-- Connect the equipment into an outlet on a circuit different from that to which the receiver is connected.
-- Consult the dealer or an experienced radio/TV technician for help.

Warning: changes or modifications not expressly approved by the party responsible for compliance could void the user's authority to operate the equipment

The devices has been evaluated to meet general RF exposure requirement， the device can be used in portable exposure condition without estriction