HONOR MAX

DRONE USER MANUAL

1.0 WELCOME

Thanks for purchasing a HONOR MAX Drone, get ready to have the time of your life! We're sure your HONOR MAX will bring you a world of great experiences in the air. Please take the time to read the following safety warnings and operating instructions carefully. Please also keep this instruction manual for future reference and maintenance.

1.1 BEFORE YOU GET UP IN THE AIR

Connect the Drone battery to the included Batter charging base and insert the USB charging cable into any computer USB port. While the battery is charging please take the time to read the instructions and familiarize yourself with the controls of your HONOR MAX.

WARNING:

PLEASE DO NOT MOVE THE CAMERA MANUALLY IT CAN DAMAGE THE GIMBAL AND CAMERA.

1.2 GENERAL SAFETY

- Do not fly your Drone any closer than 30 meters from people, animals or buildings. Check to make sure you are no closer than 5.5 kilometres from any airfields or airports.
- You must only fly during the day and keep your drone within visual line-of sight
- Please do not attempt to touch the Drone when the Remote Control is powered on, or if the rotor blades are turning.
- When flying your Drone, please keep in mind the privacy of others.
- This product shoud be operated by the people who are over 14 years old. It is a precision device that combined machinery, electronics with air mechanics and high frequency transmission into a single unit. It requires correct assembly and debugging to avoid any accident. The user should operate and control this product in a safe manner. In case of incorrect operation, it may cause serious injury or damage property. It can also be lost due to incorrect operation.
- This product is suitable for experienced UAV pilots no less than 14 years of age.
- In the event of a problem during using, operating, or maintaining, please contact the local sales agent, retailer or keep in touch with the responsible staff of our company.
- Please use the original parts made by Helicute for any re-equipping or maintenance to ensure flying safety. Please operate and use only under the scope of the product function permitted. Using un-approved parts will void warranty. DO NOT use for any illegal purpose or use beyond the scope of which your local laws and regulations have stipulated.

1.2.1 Warning

- You have the responsibility to make sure that this model of aircraft won't cause injury to others' body or cause any damage to property.
- Our company and distributors won't be responsible for any incorrect operation, which may cause loss or damage or injury to the body.
- Children ages 14 and up should use this product under the guidance of an adult. This product is FORBIDDEN to be used by children under 14 years old.
- Playing on the road or near high traffic areas is strictly FORBIDDEN so as not to cause an accident.
- Small parts are included with this product. Please place it beyond the reach of the children to avoid a CHOKING HAZARD or parts being mistakenly swallowed.

1.3 BATTERY INSTALLATION & CHARGING

DRONE

- Insert the Drone battery into the Charging base, the insert the charging lineof the charging base into any USB port.
- **Remark:** Do not turn on the battery when charging.
  Only use the Battery charging base and USB charging cable which provided by our factory.

NOTE:

PLEASE MAKE SURE THE BATTERY IS TURNED OFF BEFORE CHARGING, OTHERWISE THE BATTERY WILL NOT CHARGE.

- **CONTROLLER**

Insert one side of the USB connector into the port of remote control, and the other side into any computer USB port.
Remark: Do not turn on the controller when charging.
Only the original charging cable make from our factory can be used.

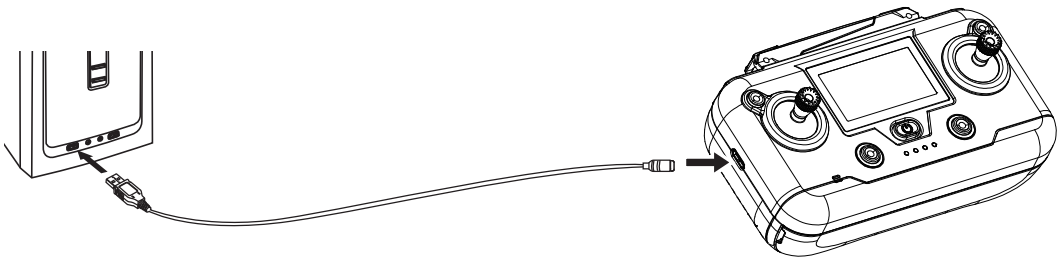

- **Please DO NOT** disassemble or re-equip the aircraft as it may cause a breakdown of the aircraft during flying.
- Batteries in the battery compartment of the charger should be inserted into the designated power source which has the same logo as the product.
- When charging the battery, please conduct it under the surveillance of an adult. Please also keep it far away from any combustible object when charging. Please keep this aircraft within eyesight when charging.
- The aircraft should be kept far away from any other electric compliance or equipment as far as possible or kept far away from the place where having the magnetic object nearby as they may cause interference with each other.
- Please keep the safe distance from the high-speed rotating rotor so as not to cause twisted or danger of being wounded or being cut.
- Engine will heat up. Please DO NOT touch it to avoid being burned or injured.
- To comply with the command of the magnetic environment requirement formulated by the Aviation Radio Bureau and the related authority, during the regulated period in certain areas, please stop using the remote controller of this model when such regulation command is issued.
- Understand airspace restrictions and requirements.

1.3.2 BATTERY SAFETY

- Always unwind all cables before charging.
- Do not over charge the battery. Once the charging process is completed, remove the battery from the charger as soon as possible.
- Only use the included or replacement charging cable and batteries.
- You must charge the Lithium polymer battery in a safe area away from flammable materials.
- The battery is only to be charged under adult supervision, do not leave charging batteries unattended.
- Do not charge the battery in temperatures hotter than 40°C or colder than 0°C.
- Do not cover the batteries when charging. Do not leave batteries in direct sunlight.
- Do not bend, puncture, crush or scratch the drone's battery. Do not store batteries in your pockets, on your person or in extreme temperatures.
- Never plug in a battery and leave it to charge unattended overnight

2.0 CONTROLLER OVERVIEW

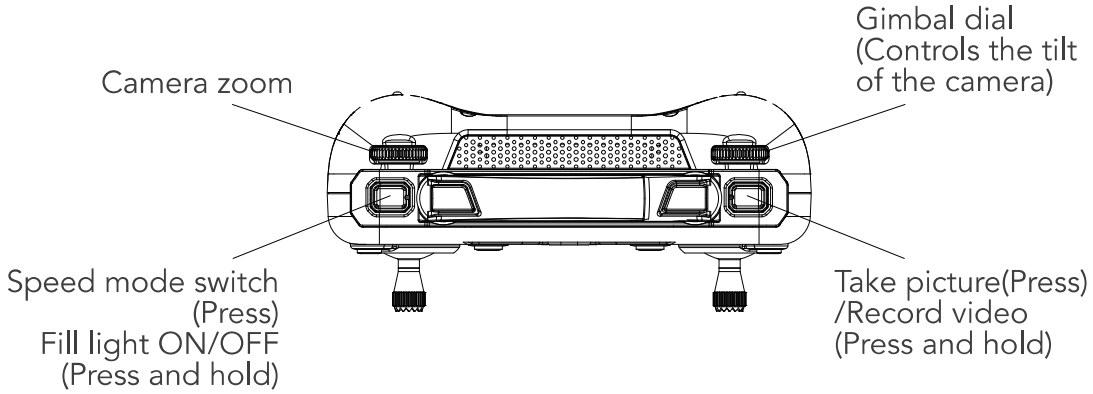

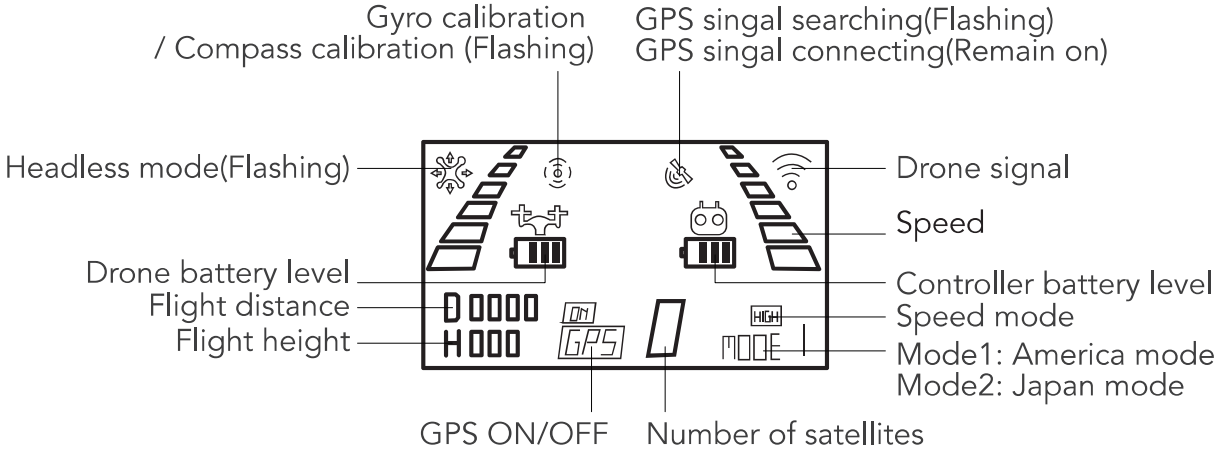

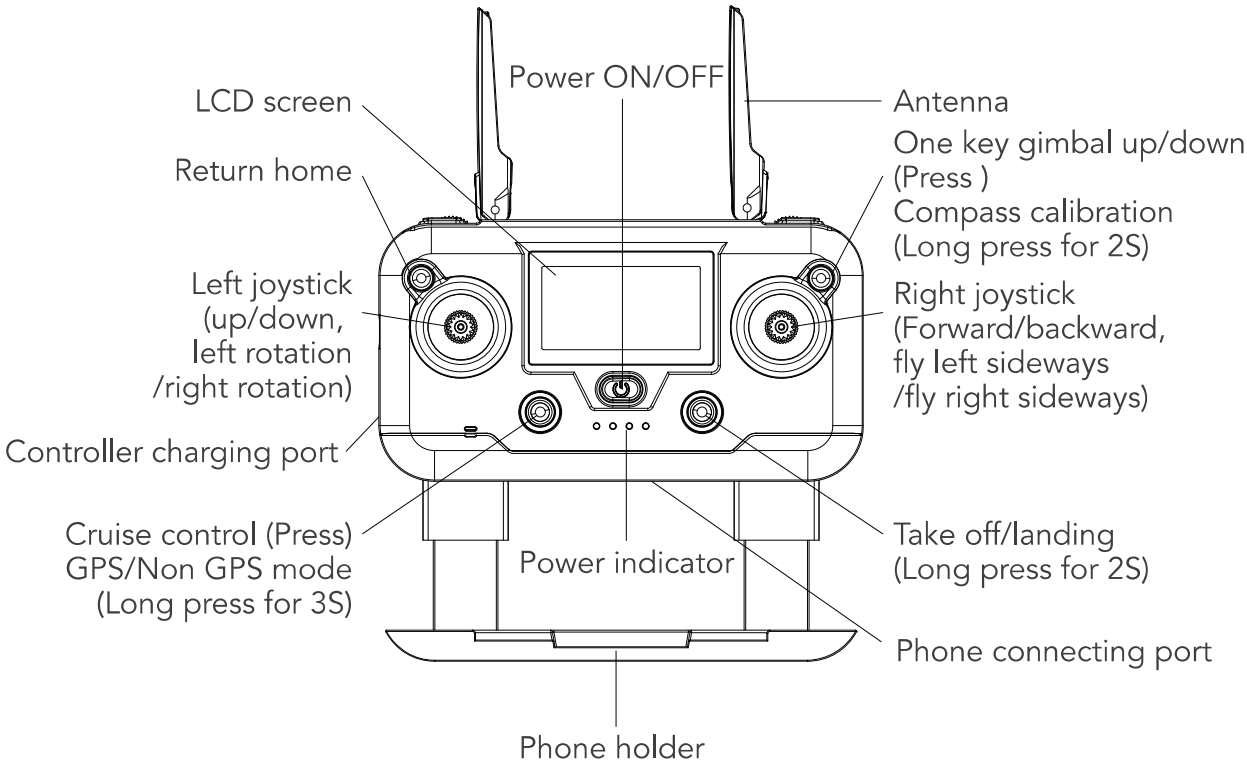

3.0 INSTALLING MICRO SD CARD*

Slot the Micro SD Card into the slot by facing the copper tracks upwards and the SD card notch on your left side.
Gently press the card in until you hear the lock click into place.

3.1 REMOVING A MICRO SD CARD

To remove your Micro SD Card, follow the instructions below.

1. Press the Micro SD Card in until a click is heard and the card releases.
2. The card will now release, and the Micro SD Card will now be removable.

NOTE:

- Micro SD card not included. (Class 10 or above up to 128GB Capacity).

4.0 GETTING STARTED

1. Once you have inserted the fully charged battery in your Drone and the remote control is also charged, please conduct a complete check of your surroundings to ensure that your location is safe to take off from.
   All aircraft arms are folded before ship out of the factory. Please unfold the arms and propellers; then take off the Gimbal Cover before flying.
2. Press once then long press the Power button to turn on your Drone and place it on a level section of ground free of any obstacles; the drone will get into signal seraching mode (The Front and Rear lights are flashing slowly in red color).
   In the meantime, the camera gimbal will rotate for auto calibration, after finished, the gimbal will stop rotation.

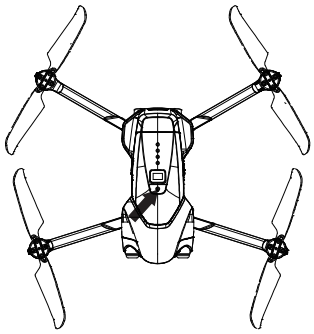

3. Press once then long press the Power button to turn on the Controller, there will be "DiDi-DiDi" sounds and get into signal seraching mode; Once connected with the drone,the controller will stop "DiDi" sounds and the the drone Front lights in blue and Rear lights in green color are flashing.

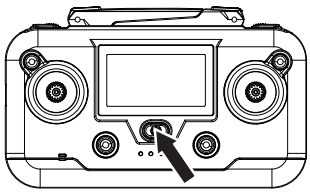

REMARK:

A. GPS mode is on by default.
B. Please switch to Non-GPS mode when you play the drone indoor (The Front lights in blue color and Rear lights in green color are flashing slowly), and jump forward and refer to section "GYROSCOPE CALIBRATION" and skip steps

4.1 GPS MODE - CALIBRATING THE DRONE

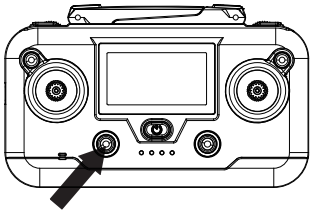

After pairing the drone with controller, Long press 3S for the Compass calibration button, the controller will "beep" and the Compass calibration mode has been activated and indicated the drone is now ready to be calibrated.

Once GPS calibration mode has been activated, the Front LED lights will flash quickly in purple and the Back LED lights will flash quickly in yellow to indicate the drone is now ready to be calibrated.

NOTE:

- Once you drone has been calibrated for GPS Mode, you will only need press the GPS Mode ON/OFF button to turn ON and turn OFF GPS Mode during flight.
- If GPS flight operation is malfunctioning, Long Press the Calibration button to recalibrate the drone.

4.2 LEVEL CORRECTION

Lift the drone slightly off the ground (approx 50cm) and rotate the drone in a clockwise direction (See below), and the controller have a "beep" correction sound. Once completed, level has been seccessfully calibrated.

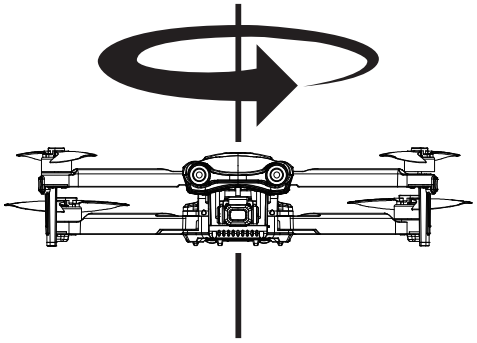

4.3 VERTICAL CORRECTION

Lift the drone slightly off the ground (approx 50cms) and rotate vertically from the ground until the controller have a "DI ~ DI ~" sound, and the Front LED flash slowly in bule, level correction has been seccessfully calibrated.

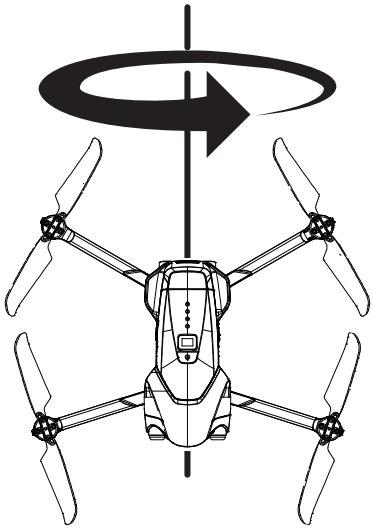

4.4 CONNECTING GPS SIGNAL (GPS ONLY WORKS OUTDOOR).

After finishing the Level Correction and Vertical Correction process, place the drone on a level surface/ground and it will automatically start to connect to a GPS signal, once connected, the Front lights will change from flashes to solid Blue, Rear lights will change from flashes to solid Green.

4.5 GYROSCOPE CALIBRATION

Keeping the drone placed on the ground outdoors, move the left and right control stick down simultaneously (7 o'clock and 7'o clock) as shown below The LEDS on the drone will start flashing rapidly, indicating that the drone has now entered Gyroscope calibration mode. After Gyroscope calibration is successful the Drone's lights will all change from flashing rapidly to solid.

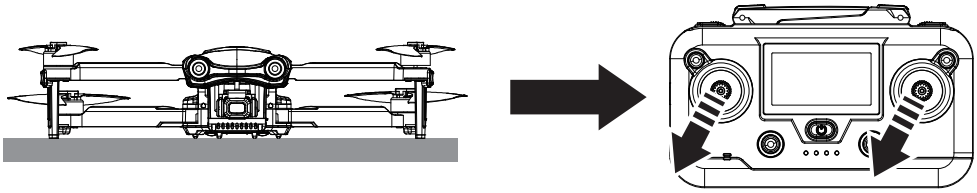

After successful calibration, the motors are required to be unlocked. Please move left and right control stick down simultaneously (5 o'clock and 7 o'clock). The Drone rotors will start rotation and is ready to take off.

CAUTION:

MAKE SURE DRONE IS AT A SAFE DISTANCE BEFORE INITIATING TAKE OFF.

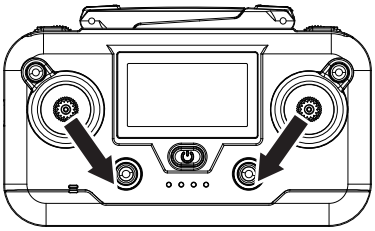

NOTE:		
Depending on the drone mode, the drone LEDs will change colour.		
Operation Mode	Front LEDs	Back LEDs
GPS Mode	Blue	Green
Non GPS Mode	Blue	Flashing in bule/green color slowly
GPS Mode Not connected	Blue	Flashing in bule/green color quickly

5.0 BASIC FLIGHT

UP AND DOWN

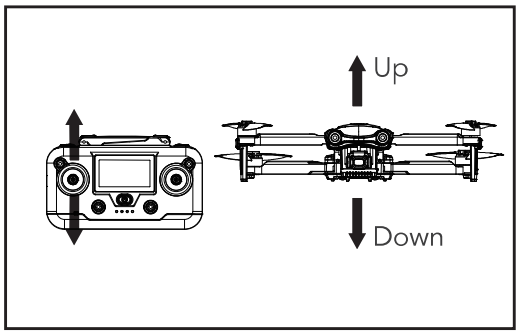

FORWARD AND BACKWARD

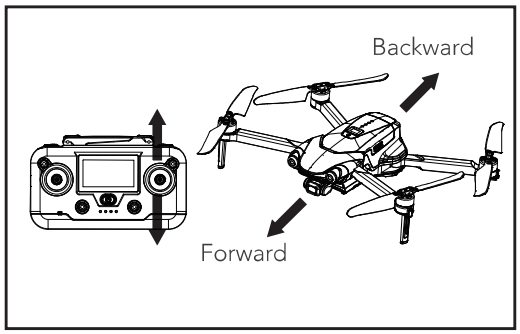

LEFT SPIN AND RIGHT SPIN

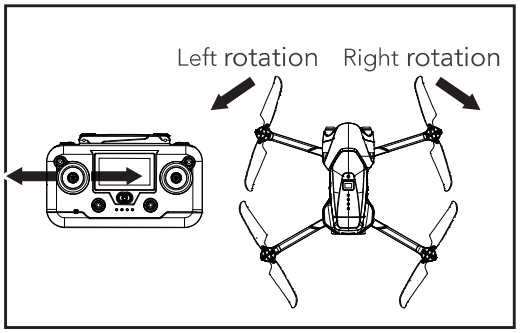

LEFTSIDE AND RIGHTSIDE

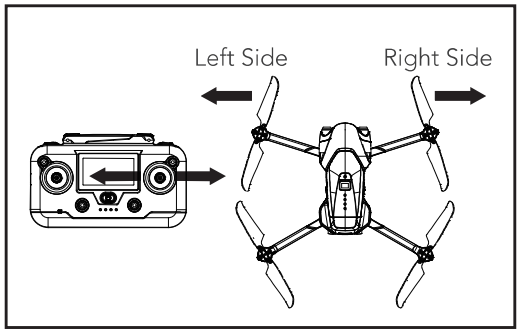

5.1 ONE KEY TAKE OFF/LANDING

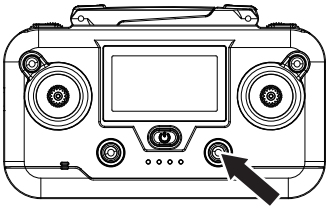

The one button take off and landing button allows you to easily get your drone off the ground and land once the drone is paired and the motors are unlocked.

Long press the One Key Take-off button to get your drone off the ground around 1.5 meters.

NOTE:

- This button is different from the Return to Home button, as it will only land the drone from its current position in the air.

5.2 OPTICAL FLOW POSITIONING MODE

For Optical Flow to work best, the surroundings should not be dark and the surface type should not be of the same colour type .

NOTE:

- If Drone's Optical Flow is not working well because of surroundings, Drone's rear lights will flash yellow.
- Drone's height has to be limited to 10 metres for optical flow to work.
- Strong windy conditions will affect the Optical Flow performance.
- Optical Flow positioning is disabled under GPS Mode.

5.3 CONTROLLER ALERTS

When the Remote Control battery is low, the Remote Control will issue a slow series of beeps, signaling that the batteries need to be charged.

When the Drone battery is running low: In GPS mode, the drone will return home automatically.

When the GPS mode is off, the Drone drone's lights will flash red.
When this happens, you should now immediately fly the drone back to your location, otherwise the drone will begin landing automatically at it's current position.

NOTE:

Do not ignore low power warnings as this may result in unplanned landings.

5.4 RETURN TO HOME

Return to home brings the Drone back to the location it was launched from.

To activate Return to Home, press the Return to Home button on the remote control like picture shown.

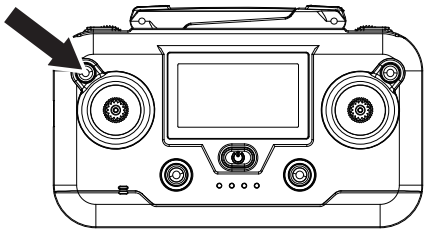

NOTE:

- Return to Home button will work only in GPS Mode

It is important that the GPS is correctly connected before launch before activating Return to Home. Failing to do so may result in the drone flying away when Return to Home is attempted.

6.0 APP DOWNLOADED

Please scan below the corresoonding QR code to download the APP "**HFun Pilot**".(Go to the "**APP Store**" for Apple devices or "**Google Play**" for Android devices to download the " **HFun Pilot** ").

APP (IOS)

APK (Android/Oversea)

APK (Android/Mainland China)

CONNECT THE APP WITH DRONE

1. Select the Appropriate RC cable.
2. Connect one end of the RC cable to the remote controller and the other end to the mobile phone.
3. Enter the App, and allow the permission to pop up.
   When you enter the CONTROL interface and see the image transmission screen of aircraft, the connection is successful.

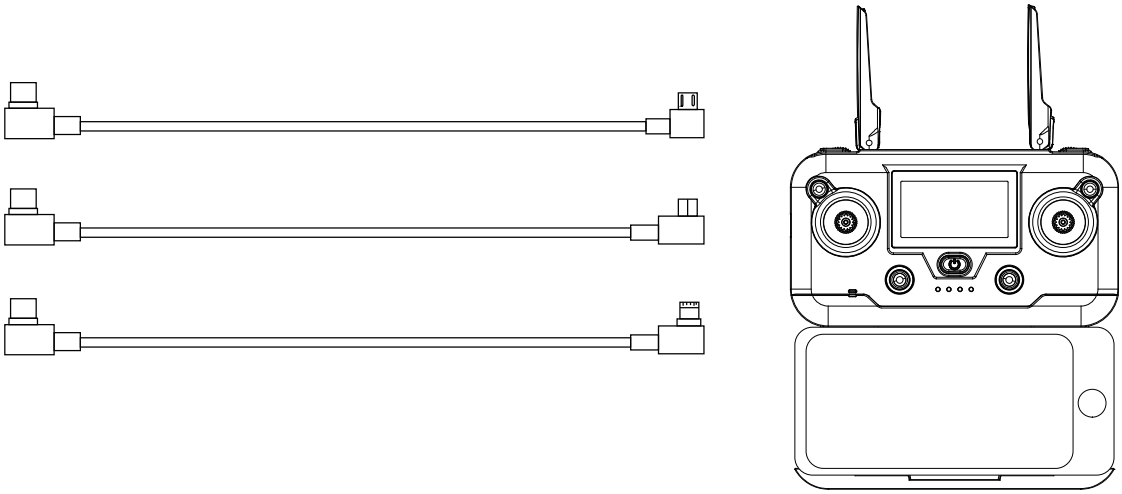

⚠ 1. When the data cable is connected to the phone, ensure that the plug of the data cable is installed in place. If installed incorrectly, it will result in the failure of data transmission with poor contact and inability to see image transmission.
2. Please correctly set the USB Settings option that pops up. Select "Transferring files" for Android phones, and "Trust" for iphones. Some USB Settings of Android phones are hidden in the “Developer options” , you need to change the "Default USB configuration" to " Transferring files" after opening the developer mode.
3. The data cable cannot charge the mobile device. Please check the battery power of the mobile device before use.

6.1 APP NAVIGATION

Once you have connected your Smart-phone to the Drone and launched the HFun Pilot , you will be able to access the App's Control screen. This screen has all of the control options and settings, as well as access to the on screen control system.

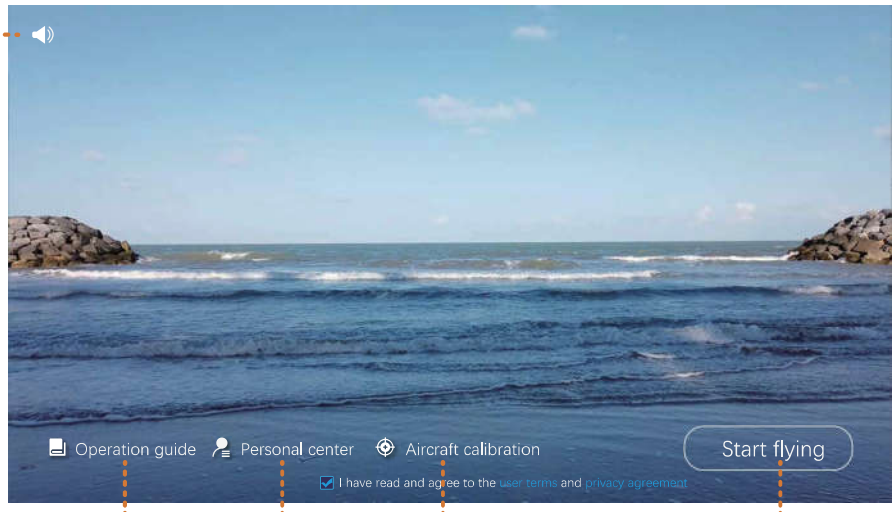

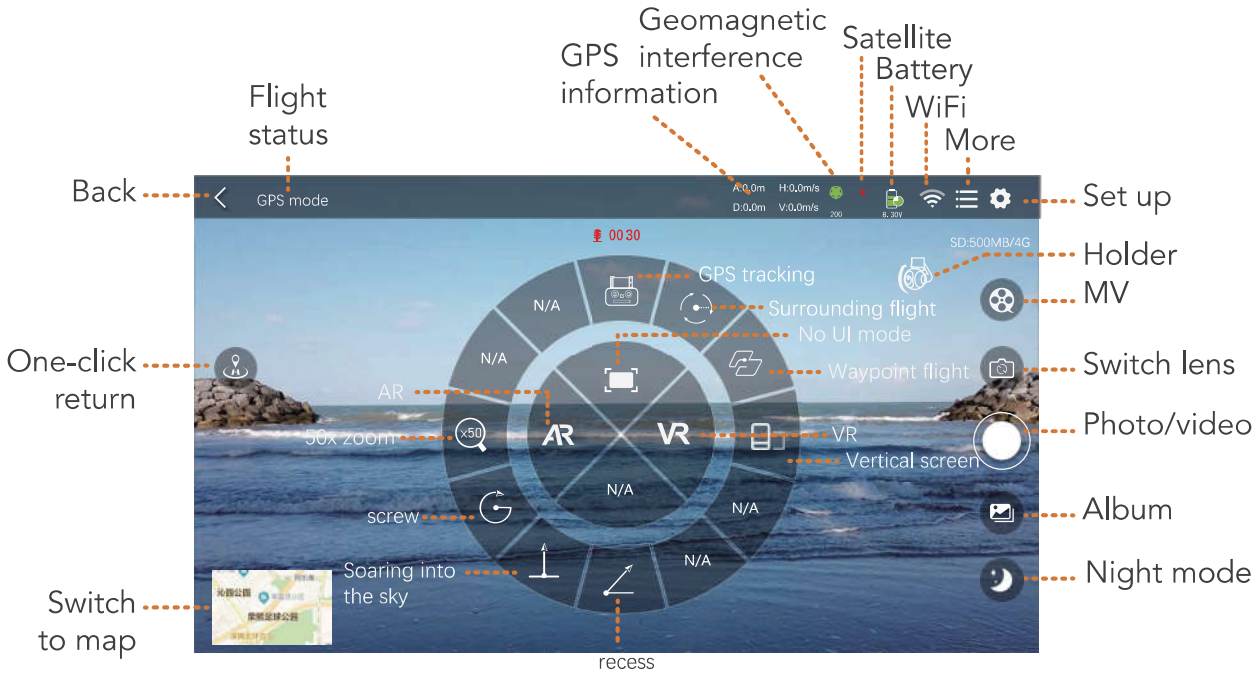

WiFi: Display chart signal strength;

Satellite: Represents current flight mode and number of satellites;Red indicates fixed height mode, without the function of returning, following, circling and pointing. Constant light indicates current GPS mode.

Battery: The battery status of the aircraft. (1) 2-4 grid indicates the normal power,which can operate the returning, fol- lowing, circling and pointing flightfunctions normally in the GPS mode. (2) 1 grid (flicker state) represents thecurrent low power state, and the aircraft will perform the automatic course reversal function. There is no fol-lowing, circling and pointing flight function in low power state.

GPS information: TDisplay the current height and distance of the aircraft from the home point, A-altitude D-distance H-horizon tal speed V-vertical speed.

One-click return: In GPS mode, click it for drone return to home.

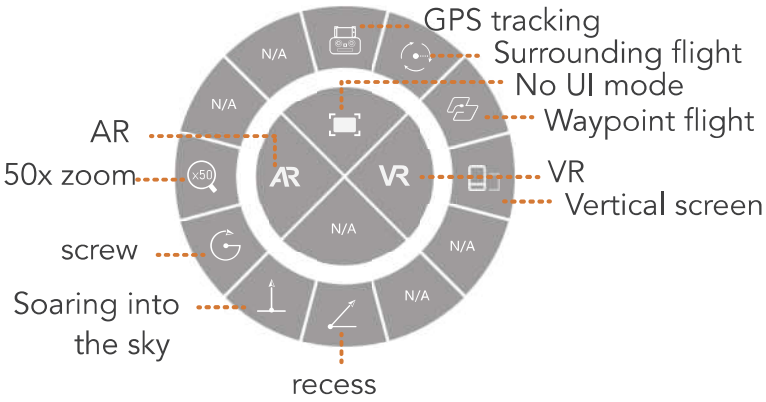

Surrounding flight: After starting, the aircraft will automatically spiral. Pay attention to the obstcles above to avoid injury! In case of emergency, immediately interrupt the flightwith the remote control!

Soaring into the sky: After starting, the aircraft will rise automatically. Pay attention to the obstacles above to avoid injury! In case of emergency, immediately interrupt the flight with the remote control!

Backward side ways flight: After starting, the aircraft will lean back away from the target and pay attention to the space behind to avoid damage! In case of emergency, immediately interrupt the flight with the remote control!

AR: Embed AR 3D model in real-time video stream;

50x zoom: After opening, adjust the zoom multiples of the lens view by adjusting the right slide bar. After the view is enlarged, the finger slides the visual range of the movable view on the screen.

GPS tracking: In GPS mode, click this button and the aircraft will followthe phone.

No UI mode: Hide non-essential UI controls;

Surrounding flight: In GPS mode, the aircraft nose will fly around clockwise or counterclockwise with the current position of the air craft as the center. During the surround process, you can control the rise, fall, forward, and reverse to adjust.

VR: Click into VR mode.

Waypoint flight: In GPS mode, the aircraft will fly according to the location selected on the map.

Holder: Turn on the front camera pan/tilt controller.

Vertical screen: Turn on vertical screen mode.

Shooting mode

Click [More] on the control page, click the vertical screen to open vertical screen shooting, or click [Settings] - Image transmission settings - shooting mode to open delayed shooting and vertical screen shooting.

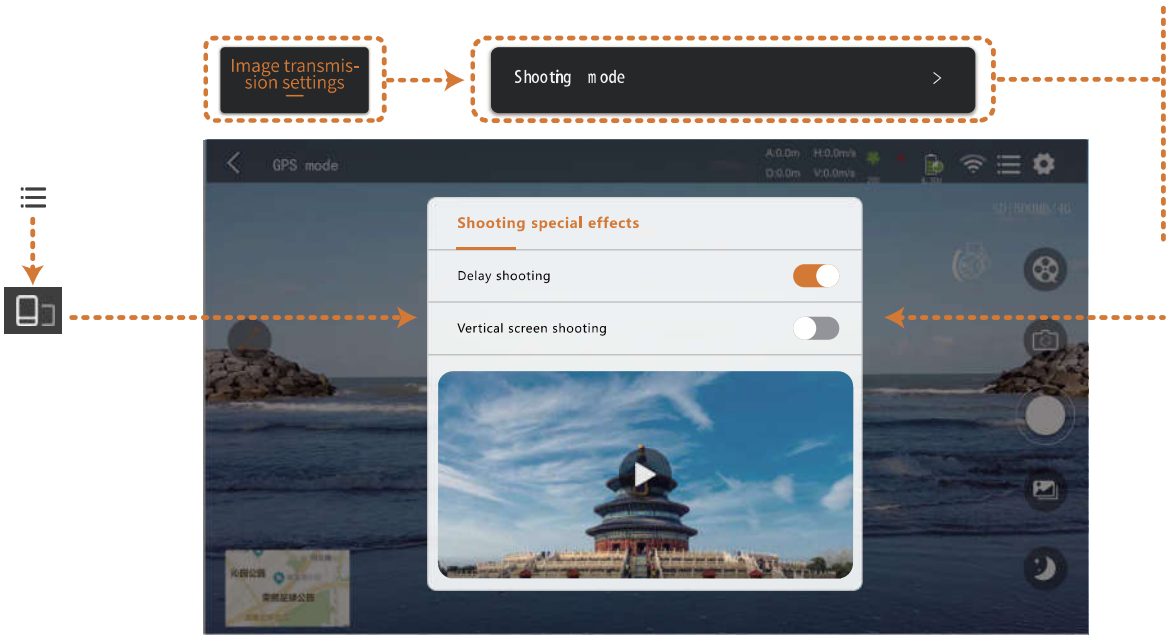

MV: Click the button to open the MV interface.

Switch lens: The front lens and the lower lens can be switched.

Photo/video: Click the button to take a photo according to the current lens (front lens or bottom lens); long press the button to switch to camera.

Album: Can view photos and videos.

Night mode: Night mode can be turned on.

Multi-camera funtion guide

Switch lens

Camera switching and multi-lens window:
In the expanded button, you can freely switch the drone's top and bottom camera、Binocular ranging;
And combined with the mobile phone camera to realize the free combination of multiple windows.

Click the "switch lens" button to switch the following four functional states successively:

(1) ordinary front lens;
(2) shooting;
(3) Binocular ranging;

If the button "switch lens" is not clicked, the default function is normal front-lens function.

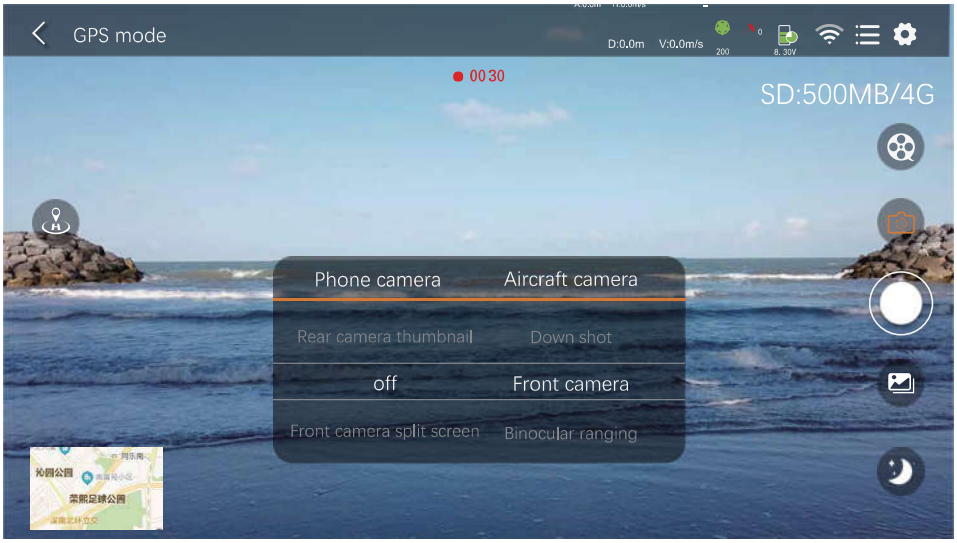

Holder

After the aircraft takes off, the holder will be displayed on the left side of the screen. At this time, if you move the sliderupward, the front lens of the aircraft will move upward by a certain angle; if you move the slider down, the front lens of the aircraft will move downward by a certain angle.

Share

After clicking in the upper right corner of the screen on the control page, enter the album interface. When you click to view a photo or video, users can share photos or videos to major social platforms through in the top right corner.

6.2 ONE KEY RETURN

Press the Return to Home button for the Drone to return to its starting position.

> **NOTE:**
>
> - If the battery is low or if the drone loses signal, It will fly back to its starting position. GPS mode has to be enabled for this function to work.

6.3 WAYPOINT MODE

1. In Multi-place flight mode the screen will switch to the map, click the pen icon and set your waypoint path.
   Waypoint Flight: Only applicable when GPS mode is on.
2. After selecting the waypoints, click on the Send Icon. Drone will start flying and follow the marked points. The flight height of the drone can be controlled by the left control stick during flight.

When the drone does not have enough power during flight, the drone will automatically return to the starting point from its current position.

If you feel that the path is too crowded, you can delete a single path by pressing the Single Delete Icon or delete all the waypoints by pressing the Delete Icon.

6.4 FOLLOW ME

Press the Follow icon on the App, the drone will follow your smart phone's GPS location
Remark: This function only work in GPS mode

6.5 Circle flight

Press the Circle flight icon on the **HFun Pilot** APP.

1. Expand the flight position within the drone's controllable range, then click the Circle flight icon.
2. Press the Circle flight icon and the drone will set it's current location as the interest point, then you can choose either clockwise or counter-clockwise flight on the App, and the drone will then fly around it.
3. If you need to change the set center point, you can press the Circle flight again to cancel the surrounding flight. You can then fly to your new interest point and press the Circle flight again to start the surrounding flight.

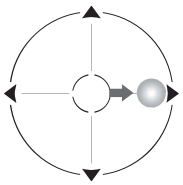

Moving the right thumb stick right will make the Drone circle the target clockwise while focusing on the target.

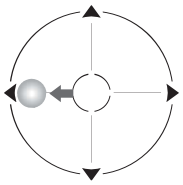

Moving the right thumb stick left will make Drone circle the target counter clockwise while focusing on the target.

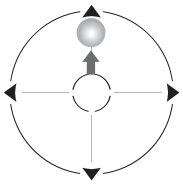

Moving the right thumb stick up will move the Drone away from the target making the circle bigger.

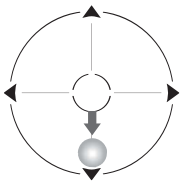

Moving the right thumb stick down will move the Drone closer to the target making the circle smaller.

6.6 OPTICAL FLOW POSITIONING

Optical flow position is a way to keep your drone flying stable, which ensures the drone can takes pictures /video at high quality.

SPECIAL WARNING:

- The drone height cannot be more than 10 metres from the floor.
  Strong winds will interfere the optical flow positioning of the drone.
  Optical flow will operate only when GPS mode is off.

7.0 DRONE MAINTENANCE

Avoid exposing your Drone and it's accessories to dust, sand and moisture as these can damage the Drone If the Drone is exposed to dust or sand, use a soft brush to remove any visible particles.

7.1 REPLACING ROTOR BLADES

Drone
Replacing Damaged blades,Your set will come with 4 I replacement rotors, t wo (A)type and two(B) type. You will see the "A and "B word on the canot put the rotor on the motor accordingly.

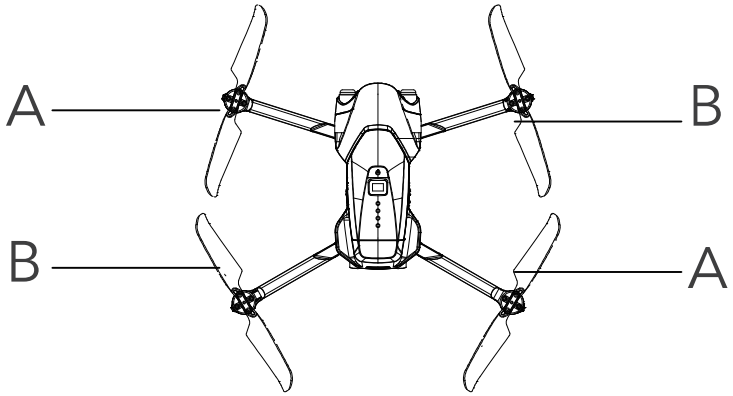

FCC STATEMENT

This drone complies with Part 15 of the FCC Rules. Operation is subject to the following two conditions: (1) this device may not cause harmful interference, and (2) this device must accept any interference received, including interference that may cause undesired operation.

Changes or modifications to this unit not expressly approved by the party responsible for compliance could void the user's authority to operate the equipment.

NOTE: This equipment has been tested and found to comply with the limits for a Class B digital device, pursuant to Part 15 of the FCC Rules. These limits are designed to provide reasonable protection against harmful interference in a residential installation. This equipment generates, uses and can radiate radio frequency energy and, if not installed and used in accordance with the instructions, may cause harmful interference to radio communications. However, there is no guarantee that interference will not occur in a particular installation. If this equipment does cause harmful interference to radio or television reception, which can be determined by turning the equipment off and on, the user is encouraged to try to correct the interference by one or more of the following measures:
-- Reorient or relocate the receiving antenna.
-- Increase the separation between the equipment and receiver.
-- Connect the equipment into an outlet on a circuit different from that to which the receiver is connected.
-- Consult the dealer or an experienced radio/TV technician for help.

This device and its antenna(s) must not be co-located or operation in conjunction with any other antenna or transmitter.

Radiation Exposure Statement
To maintain compliance with FCC's RF Exposure guidelines, This equipment should be installed and operated with minimum distance of 20cm from your body.

FCC Statement

This remote control complies with Part 15 of the FCC Rules. Operation is subject to the following two conditions: (1) this device may not cause harmful interference, and (2) this device must accept any interference received, including interference that may cause undesired operation.

Changes or modifications to this unit not expressly approved by the party responsible for compliance could void the user's authority to operate the equipment.

NOTE: This equipment has been tested and found to comply with the limits for a Class B digital device, pursuant to Part 15 of the FCC Rules. These limits are designed to provide reasonable protection against harmful interference in a residential installation. This equipment generates uses and can radiate radio frequency energy and, if not installed and used in accordance with the instructions, may cause harmful interference to radio communications. However, there is no guarantee that interference will not occur in a particular installation. If this equipment does cause harmful interference to radio or television reception, which can be determined by turning the equipment off and on, the user is encouraged to try to correct the interference by one or more of the following measures:
-- Reorient or relocate the receiving antenna.
-- Increase the separation between the equipment and receiver.
-- Connect the equipment into an outlet on a circuit different from that to which the receiver is connected.
-- Consult the dealer or an experienced radio/TV technician for help.

This device and its antenna(s) must not be co-located or operation in conjunction with any other antenna or transmitter.

Radiation Exposure Statement
The device has been evaluated to meet general RF exposure requirement in portable exposure condition without restriction.