BCTC 倍测检测

TEST REPORT

Report No.:	BCTC2009000498E
Applicant:	Zhong Tian Ding Sheng (Shenzhen) Industrial Co., Ltd
Product Name:	Bluetooth headphone
Model/Type Ref.:	Q9
Tested Date:	Sep. 07, 2020 to Sep. 15, 2020
Issued Date:	Sep. 15, 2020

Shenzhen BCTC Testing Co., Ltd.

FCC ID: 2AXQO-Q9

Product Name:	Bluetooth headphone
Trademark:	N/A
Model/Type Ref.:	Q9 B3520
Prepared For:	Zhong Tian Ding Sheng (Shenzhen) Industrial Co., Ltd
Address:	Room 1920, South China Development Center No. 1 Huanan Avenue, Pinghu Street, Longgang District Shenzhen, Guangdong Province, China
Manufacturer:	GuangDong Kotion Electronics tech Co,.Ltd
Address:	Room 101 ,Building 1,NO18 ,2nd Road Sanjiang Industrial Areas,HengLi Town,DongGuan City,GuangDong Province
Prepared By:	Shenzhen BCTC Testing Co., Ltd.
Address:	1-2F, East of B Building, Pengzhou Industrial, Fuyuan 1st Road, Qiaotou Community, Fuyong Street, Bao'an District, Shenzhen, China
Sample Received Date:	Sep. 07, 2020
Sample tested Date:	Sep. 07, 2020 to Sep. 15, 2020
Issue Date:	Sep. 15, 2020
Report No.:	BCTC2009000498E
Test Standards	FCC Part15.247 ANSI C63.10-2013
Test Results	PASS
Remark:	This is Bluetooth Classic radio test report.

Tested by:

Sam Zeng

Sam zeng/Project Handler

Approved by:

Zero Zhou/Reviewer

SHENZHEN BCTC TESTING CO., LTD. 深圳倍测检测 BCTC APPROVED

The test report is effective only with both signature and specialized stamp.This result(s) shown in this report refer only to the sample(s) tested. Without written approval of Shenzhen BCTC Testing Co., Ltd, this report can't be reproduced except in full.The tested sample(s) and the sample information are provided by the client.

TABLE OF CONTENT

Test Report Declaration Page
1. VERSION 5
2. TEST SUMMARY 6
3. MEASUREMENT UNCERTAINTY 7
4. PRODUCT INFORMATION AND TEST SETUP 8
4.1 Product Information 8
4.2 Test Setup Configuration 8
4.3 Support Equipment 9
4.4 Channel List 9
4.5 Test Mode 10
4.6 table of parameters of text software setting 10
5. TEST FACILITY AND TEST INSTRUMENT USED 11
5.1 Test Facility 11
5.2 Test Instrument Used 11
6. CONDUCTED EMISSIONS 13
6.1 Block Diagram Of Test Setup 13
6.2 Limit 13
6.3 Test procedure 13
6.4 EUT operating Conditions 13
6.5 Test Result 14
7. RADIATED EMISSIONS 16
7.1 Block Diagram Of Test Setup 16
7.2 Limit 17
7.3 Test procedure 18
7.4 EUT operating Conditions 19
7.5 Test Result 20
8. RADIATED BAND EMISSION MEASUREMENT AND RESTRICTED BANDS OF OPERATION 24
8.1 Block Diagram Of Test Setup 24
8.2 Limit 24
8.3 Test procedure 25
8.4 EUT operating Conditions 25
8.5 Test Result 26
9. CONDUCTED EMISSION 27
9.1 Block Diagram Of Test Setup 27
9.2 Limit 27
9.3 Test procedure 27
9.4 Test Result 28
10. 20 DB BANDWIDTH 37
10.1 Block Diagram Of Test Setup 37
10.2 Limit 37
10.3 Test procedure 37

10.4 Test Result 38
11. MAXIMUM PEAK OUTPUT POWER 43
11.1 Block Diagram Of Test Setup 43
11.2 Limit 43
11.3 Test procedure 43
11.4 Test Result 44
12. HOPPING CHANNEL SEPARATION 49
12.1 Block Diagram Of Test Setup 49
12.2 Limit 49
12.3 Test procedure 49
12.4 Test Result 50
13. NUMBER OF HOPPING FREQUENCY 55
13.1 Block Diagram Of Test Setup 55
13.2 Limit 55
13.3 Test procedure 55
13.4 Test Result 56
14. DWELL TIME 58
14.1 Block Diagram Of Test Setup 58
14.2 Limit 58
14.3 Test procedure 58
14.4 Test Result 59
15. ANTENNA REQUIREMENT 65
15.1 Limit 65
15.2 Test Result 65
16. EUT PHOTOGRAPHS 66
17. EUT TEST SETUP PHOTOGRAPHS 68

(Note: N/A means not applicable)

1. VERSION

Report No.	Issue Date	Description	Approved
BCTC2009000498E	Sep. 15, 2020	Original	Valid

2. TEST SUMMARY

The Product has been tested according to the following specifications:

No.	Test Parameter	Clause No	Results
1	Conducted emission AC power port	§15.207	PASS
2	Conducted peak output power for FHSS	§15.247(b)(1)	PASS
3	20dB Occupied bandwidth	§15.247(a)(1)	PASS
4	Number of hoppingfrequencies	§15.247(a)(1)(iii)	PASS
5	Dwell Time	§15.247(a)(1)(iii)	PASS
6	Spurious RF conducted emissions	§15.247(d)	PASS
7	Band edge	§15.247(d)	PASS
8	Spurious radiated emissions for transmitter	§15.247(d) & §15.209 & §15.205	PASS
8	Conducted emission AC power port	§15.207	PASS
9	Antenna Requirement	15.203	PASS

3. MEASUREMENT UNCERTAINTY

Where relevant, the following measurement uncertainty levels have been estimated for tests performed on the Product as specified in CISPR 16-4-2. This uncertainty represents an expanded uncertainty expressed at approximately the 95% confidence level using a coverage factor of k=2.

No.	Item	Uncertainty
1	3m camber Radiated spurious emission(30MHz-1GHz)	U=4.3dB
2	3m chamber Radiated spurious emission(1GHz-18GHz)	U=4.5dB
3	3m chamber Radiated spurious emission(18GHz-40GHz)	U=3.34dB
4	Conducted Adjacent channel power	U=1.38dB
5	Conducted output power uncertainty Above 1G	U=1.576dB
6	Conducted output power uncertainty below 1G	U=1.28dB
7	humidity uncertainty	U=5.3%
8	Temperature uncertainty	U=0.59℃

4. PRODUCT INFORMATION AND TEST SETUP

4.1 Product Information

Model/Type Ref.:	Q9 B3520
Model differences:	All the model are the same circuit and RF module, except model names.
Bluetooth Version:	5.0
Hardware Version:	1.1
Software Version:	1.1
Operation Frequency:	Bluetooth: 2402-2480MHz
Type of Modulation:	Bluetooth: GFSK, Pi/4 DQPSK, 8DPSK
Number Of Channel	79CH
Antenna installation:	Bluetooth: PCB antenna
Antenna Gain:	Bluetooth : 0dBi
Ratings:	DC 3.7V from Battery

4.2 Test Setup Configuration

See test photographs attached in *EUT TEST SETUP PHOTOGRAPHS* for the actual connections between Product and support equipment.

Conducted Emission:

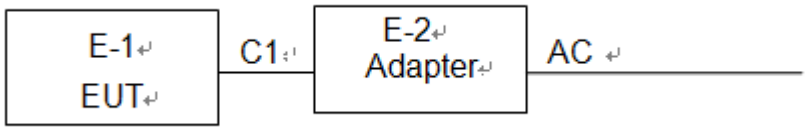

Radiated Spurious Emission

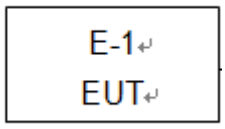

4.3 Support Equipment

No.	Device Type	Brand	Model	Series No.	Data Cable	Power Cord
E-1	Bluetooth headphone	N/A	Q9	N/A	EUT	E-1
E-2	Adapter	N/A	BCTC001	N/A	Auxiliary	E-2

Item	Shielded Type	Ferrite Core	Length	Note
C-1	NO	NO	0.6M	DC cable unshielded

Notes:

1. All the equipment/cables were placed in the worst-case configuration to maximize the emission during the test.
2. Grounding was established in accordance with the manufacturer's requirements and conditions for the intended use.

4.4 Channel List

CH	Frequency (MHz)	CH	Frequency (MHz)	CH	Frequency (MHz)	CH	Frequency (MHz)
0	2402	1	2403	2	2404	3	2405
4	2406	5	2407	6	2408	7	2409
8	2410	9	2411	10	2412	11	2413
12	2414	13	2415	14	2416	15	2417
16	2418	17	2419	18	2420	19	2421
20	2422	21	2423	22	2424	23	2425
24	2426	25	2427	26	2428	27	2429
28	2430	29	2431	30	2432	31	2433
32	2434	33	2435	34	2436	35	2437
36	2438	37	2439	38	2440	39	2441
40	2442	41	2443	42	2444	43	2445
44	2446	45	2447	46	2448	47	2449
48	2450	49	2451	50	2452	51	2453
52	2454	53	2455	54	2456	55	2457
56	2458	57	2459	58	2460	59	2461
60	2462	61	2463	62	2464	63	2465
64	2466	65	2467	66	2468	67	2469
68	2470	69	2471	70	2472	71	2473
72	2474	73	2475	74	2476	75	2477
76	2478	77	2479	78	2480	79	/

4.5 Test Mode

To investigate the maximum EMI emission characteristics generates from EUT, the test system was pre-scanning tested base on the consideration of following EUT operation mode or test configuration mode which possible have effect on EMI emission level. Each of these EUT operation mode(s) or test configuration mode(s) mentioned above was evaluated respectively.

Test Mode	Test mode	Low channel	Middle channel	High channel
1	Transmitting(GFSK)	2402MHz	2441MHz	2480MHz
2	Transmitting(Pi/4DQPSK)	2402MHz	2441MHz	2480MHz
3	Transmitting(8DPSK)	2402MHz	2441MHz	2480MHz
4	Charging(conducted emission)			
5	Transmitting (Radiated emission)			

Note:

(1) The measurements are performed at the highest, middle, lowest available channels.

(2) Fully-charged battery is used during the test

4.6 table of parameters of text software setting

During testing channel & power controlling software provided by the customer was used to control the operating channel as well as the output power level. The RF output power selection is for the setting of RF output power expected by the customer and is going to be fixed on the firmware of the final end product power parameters

Test software Version	RTLBTAPP		
Frequency	2402 MHz	2440 MHz	2480 MHz
Parameters	DEF	DEF	DEF

5. TEST FACILITY AND TEST INSTRUMENT USED

5.1 Test Facility

All measurement facilities used to collect the measurement data are located at 1-2F, East of B Building, Pengzhou Industrial, Fuyuan 1st Road, Qiaotou Community, Fuyong Street, Bao'an District, Shenzhen, China. The site and apparatus are constructed in conformance with the requirements of ANSI C63.4 and CISPR 16-1-1 other equivalent standards.

FCC Test Firm Registration Number: 712850

IC Registered No.: 23583

5.2 Test Instrument Used

Conducted emissions Test					
Equipment	**Manufacturer**	**Model#**	**Serial#**	**Last Cal.**	**Next Cal.**
Receiver	R&S	ESR3	102075	Jun. 08, 2020	Jun. 07, 2021
LISN	R&S	ENV216	101375	Jun. 04, 2020	Jun. 03, 2021
ISN	HPX	ISN T800	S1509001	Jun. 04, 2020	Jun. 03, 2021
Software	Frad	EZ-EMC	EMC-CON 3A1	\	\

Radiated emissions Test (966 chamber)					
Equipment	**Manufacturer**	**Model#**	**Serial#**	**Last Cal.**	**Next Cal.**
966 chamber	ChengYu	966 Room	966	Jun. 06. 2020	Jun. 05, 2023
Receiver	R&S	ESR3	102075	Jun. 08, 2020	Jun. 07, 2021
Receiver	R&S	ESRP	101154	Jun. 08, 2020	Jun. 07, 2021
Amplifier	Schwarzbeck	BBV9718	9718-309	Jun. 04, 2020	Jun. 03, 2021
Amplifier	Schwarzbeck	BBV9744	9744-0037	Jun. 04, 2020	Jun. 03, 2021
TRILOG Broadband Antenna	schwarzbeck	VULB 9163	VULB9163-942	Jun. 08, 2020	Jun. 07, 2021
Horn Antenna	SCHWARZBECK	BBHA9120D	1201	Jun. 10, 2020	Jun. 09, 2021
Horn Antenna (18GHz-40GHz)	SCHWARZBECK	BBHA9170	822	Jun. 10, 2020	Jun. 09, 2021
Amplifier (18GHz-40GHz)	MITEQ	TTA1840-35-HG	2034381	Jun. 08, 2020	Jun. 07, 2021
Loop Antenna (9KHz-30MHz)	SCHWARZBECK	FMZB1519B	014	Jun. 08, 2020	Jun. 07, 2021
RF cables1 (9kHz-30MHz)	Huber+Suhnar	9kHz-30MHz	B1702988-0008	Jun. 08, 2020	Jun. 07, 2021
RF cables2 (30MHz-1GHz)	Huber+Suhnar	30MHz-1GHz	1486150	Jun. 08, 2020	Jun. 07, 2021
RF cables3 (1GHz-40GHz)	Huber+Suhnar	1GHz-40GHz	1607106	Jun. 08, 2020	Jun. 07, 2021
Power Metter	Keysight	E4419B	\	Jun. 08, 2020	Jun. 07, 2021
Power Sensor (AV)	Keysight	E9 300A	\	Jun. 08, 2020	Jun. 07, 2021
Signal Analyzer 20kHz-26.5GHz	KEYSIGHT	N9020A	MY49100060	Jun. 04, 2020	Jun. 03, 2021
Spectrum Analyzer 9kHz-40GHz	Agilent	FSP40	100363	Jun. 13, 2020	Jun. 12, 2021
Software	Frad	EZ-EMC	FA-03A2 RE	\	\

6. CONDUCTED EMISSIONS

6.1 Block Diagram Of Test Setup

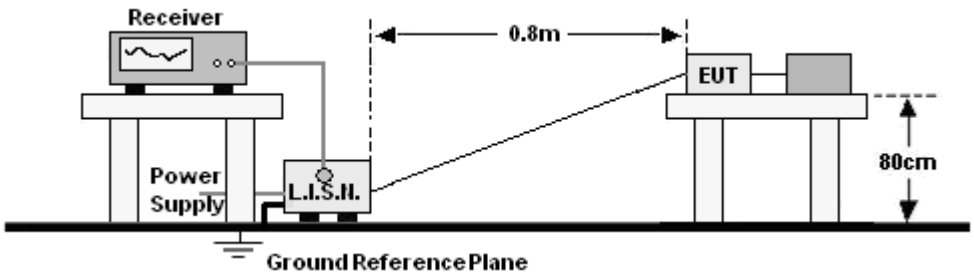

6.2 Limit

FREQUENCY (MHz)	Limit (dBuV)	
	Quas-peak	Average
0.15 -0.5	66 - 56 *	56 - 46 *
0.50 -5.0	56.00	46.00
5.0 -30.0	60.00	50.00

Notes:
1. *Decreasing linearly with logarithm of frequency.
2. The lower limit shall apply at the transition frequencies.

6.3 Test procedure

Receiver Parameters	Setting
Attenuation	10 dB
Start Frequency	0.15 MHz
Stop Frequency	30 MHz
IF Bandwidth	9 kHz

a. The Product was placed on a nonconductive table 0.8 m above the horizontal ground reference plane, and 0.4 m from the vertical ground reference plane, and connected to the main through Line Impedance Stability Network (L.I.S.N).

b. The RBW of the receiver was set at 9 kHz in 150 kHz ~ 30MHz with Peak and AVG detector in Max Hold mode. Run the receiver's pre-scan to record the maximum disturbance generated from Product in all power lines in the full band.

c. For each frequency whose maximum record was higher or close to limit, measure its QP and AVG values and record.

6.4 EUT operating Conditions

The EUT was configured for testing in a typical fashion (as a customer would normally use it). The EUT has been programmed to continuously transmit during test. This operating condition was tested and used to collect the included data.

6.5 Test Result

Temperature：	26 ℃	Relative Humidity：	54%
Pressure：	101kPa	Phase：	L
Test Voltage ：	AC 120V/60Hz	Test Mode：	Mode 4

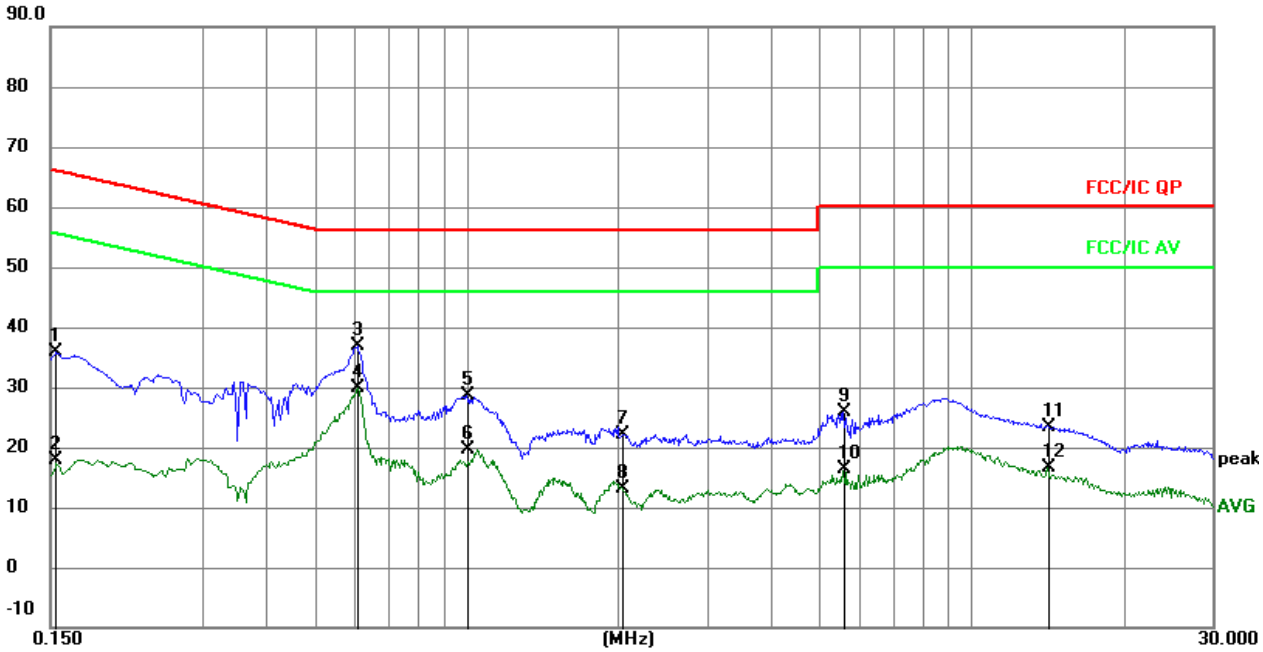

Remark:
1. All readings are Quasi-Peak and Average values.
2. Factor = Insertion Loss + Cable Loss.

No.	Mk.	Freq.	Reading Level	Correct Factor	Measure-ment	Limit	Over		
		MHz		dB	dBuV	dBuV	dB	Detector	Comment
1		0.1539	26.40	9.52	35.92	65.79	-29.87	QP	
2		0.1539	8.46	9.52	17.98	55.79	-37.81	AVG	
3		0.6075	26.96	9.97	36.93	56.00	-19.07	QP	
4	*	0.6075	19.93	9.97	29.90	46.00	-16.10	AVG	
5		0.9997	18.95	9.57	28.52	56.00	-27.48	QP	
6		0.9997	9.95	9.57	19.52	46.00	-26.48	AVG	
7		2.0333	12.60	9.59	22.19	56.00	-33.81	QP	
8		2.0333	3.52	9.59	13.11	46.00	-32.89	AVG	
9		5.5641	16.09	9.78	25.87	60.00	-34.13	QP	
10		5.5641	6.60	9.78	16.38	50.00	-33.62	AVG	
11		14.1376	13.59	9.70	23.29	60.00	-36.71	QP	
12		14.1376	6.87	9.70	16.57	50.00	-33.43	AVG	

Temperature：	26 ℃	Relative Humidity：	54%
Pressure：	101kPa	Phase：	N
Test Voltage ：	AC 120V/60Hz	Test Mode：	Mode 4

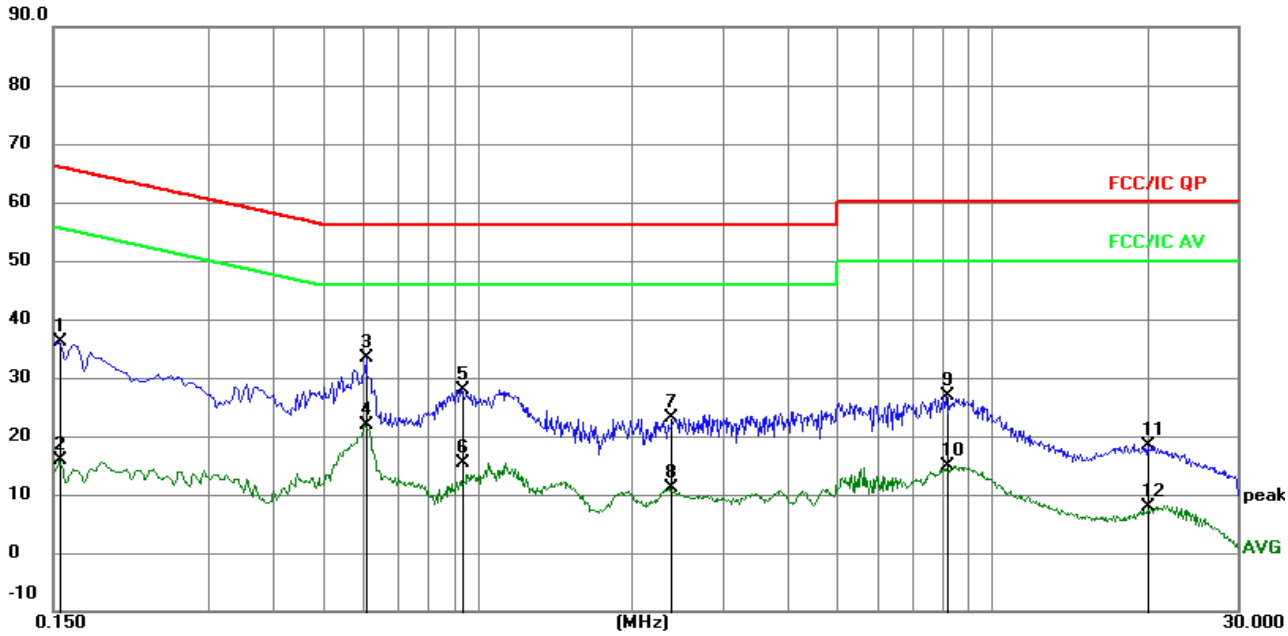

Remark:
1. All readings are Quasi-Peak and Average values.
2. Factor = Insertion Loss + Cable Loss.

No.	Mk.	Freq.	Reading Level	Correct Factor	Measure-ment	Limit	Over		
		MHz		dB	dBuV	dBuV	dB	Detector	Comment
1		0.1545	26.67	9.51	36.18	65.75	-29.57	QP	
2		0.1545	6.28	9.51	15.79	55.75	-39.96	AVG	
3	*	0.6045	23.35	9.98	33.33	56.00	-22.67	QP	
4		0.6045	11.83	9.98	21.81	46.00	-24.19	AVG	
5		0.9375	18.23	9.59	27.82	56.00	-28.18	QP	
6		0.9375	5.78	9.59	15.37	46.00	-30.63	AVG	
7		2.3730	13.60	9.62	23.22	56.00	-32.78	QP	
8		2.3730	1.39	9.62	11.01	46.00	-34.99	AVG	
9		8.1870	17.19	9.71	26.90	60.00	-33.10	QP	
10		8.1870	5.23	9.71	14.94	50.00	-35.06	AVG	
11		20.1120	8.64	9.79	18.43	60.00	-41.57	QP	
12		20.1120	-1.95	9.79	7.84	50.00	-42.16	AVG	

7. RADIATED EMISSIONS

7.1 Block Diagram Of Test Setup

（A）Radiated Emission Test-Up Frequency Below 30MHz

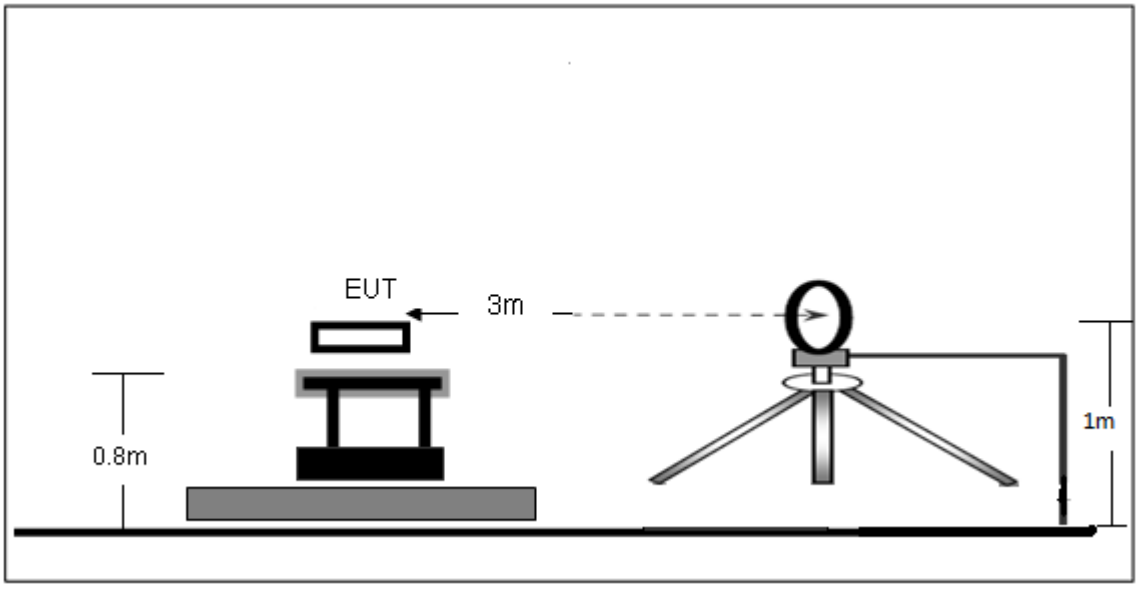

（B）Radiated Emission Test-Up Frequency 30MHz~1GHz

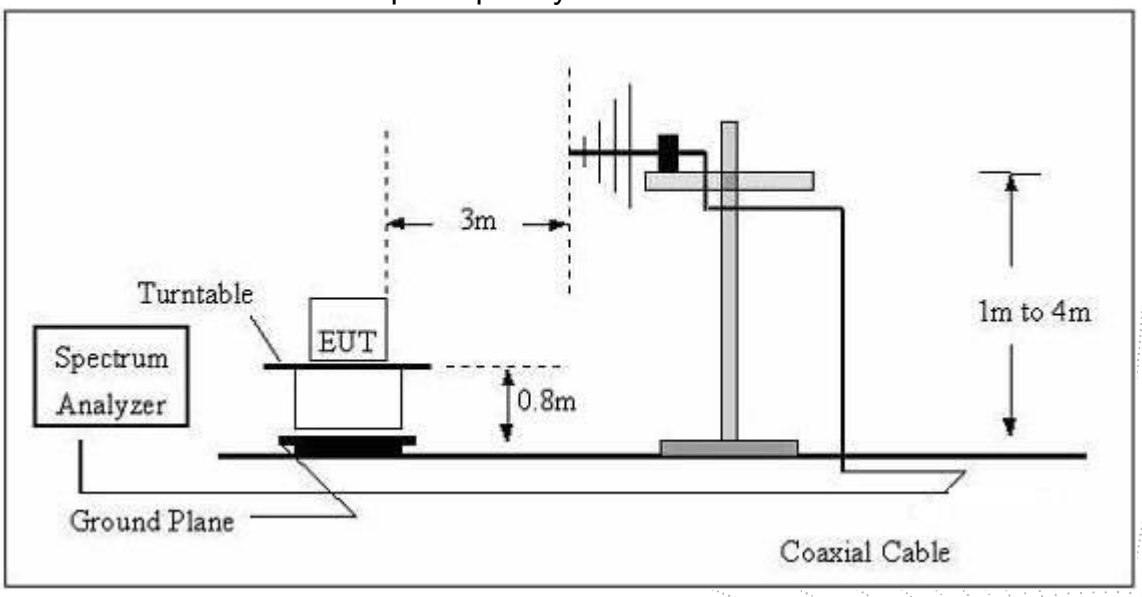

（C）Radiated Emission Test-Up Frequency Above 1GHz

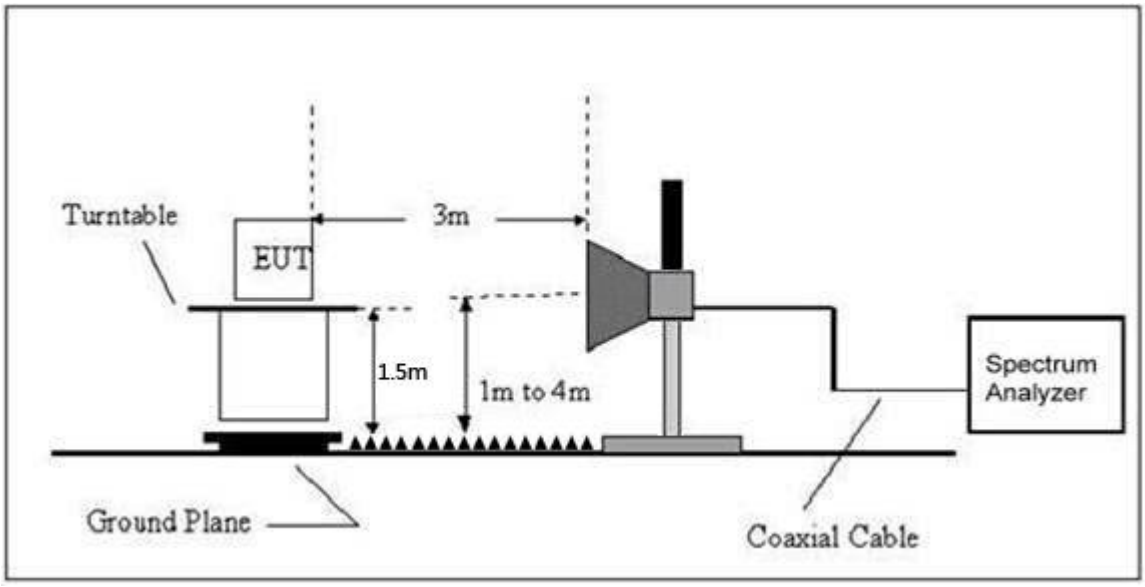

7.2 Limit

20dBc in any 100 kHz bandwidth outside the operating frequency band. In case the emission fall within the restricted band specified on 15.205(a), then the 15.209(a) limit in the table below has to be followed.

Frequency	Field Strength	Distance	Field Strength Limit at 3m Distance	
(MHz)	uV/m	(m)	uV/m	dBuV/m
0.009 ~ 0.490	2400/F(kHz)	300	10000 * 2400/F(kHz)	$20\log^{(2400/F(kHz))} + 80$
0.490 ~ 1.705	24000/F(kHz)	30	100 * 24000/F(kHz)	$20\log^{(24000/F(kHz))} + 40$
1.705 ~ 30	30	30	100 * 30	$20\log^{(30)} + 40$
30 ~ 88	100	3	100	$20\log^{(100)}$
88 ~ 216	150	3	150	$20\log^{(150)}$
216 ~ 960	200	3	200	$20\log^{(200)}$
Above 960	500	3	500	$20\log^{(500)}$

LIMITS OF RADIATED EMISSION MEASUREMENT (Above 1000MHz)

FREQUENCY (MHz)	Limit (dBuV/m) (at 3M)	
	PEAK	AVERAGE
Above 1000	74	54

Notes:
(1)The limit for radiated test was performed according to FCC PART 15C.
(2)The tighter limit applies at the band edges.
(3) Emission level (dBuV/m)=20log Emission level (uV/m).

FREQUENCY RANGE OF RADIATED MEASUREMENT (For unintentional radiators)

Highest frequency generated or Upper frequency of measurement used in the device or on which the device operates or tunes (MHz)	Range (MHz)
Below 1.705	30
1.705 – 108	1000
108 – 500	2000
500 – 1000	5000
Above 1000	5th harmonic of the highest frequency or 40 GHz, whichever is lower

7.3 Test procedure

Receiver Parameter	Setting
Attenuation	Auto
9kHz~150kHz	RBW 200Hz for QP
150kHz~30MHz	RBW 9kHz for QP
30MHz~1000MHz	RBW 120kHz for QP

Spectrum Parameter	Setting
1-25GHz	RBW 1 MHz /VBW 1 MHz for Peak, RBW 1 MHz / VBW 10Hz for Average

Below 1GHz test procedure as below:

a. The EUT was placed on the top of a rotating table 0.8 meters above the ground at a 3 meter semi-anechoic camber. The table was rotated 360 degrees to determine the position of the highest radiation.

b. The EUT was set 3 meters away from the interference-receiving antenna, which was mounted on the top of a variable-height antenna tower.

c. The antenna height is varied from one meter to four meters above the ground to determine the maximum value of the field strength. Both horizontal and vertical polarizations of the antenna are set to make the measurement.

d. For each suspected emission, the EUT was arranged to its worst case and then the antenna was tuned to heights from 1 meter to 4 meters (for the test frequency of below 30MHz, the antenna was tuned to heights 1 meter) and the rotatable table was turned from 0 degrees to 360 degrees to find the maximum reading.

e. The test-receiver system was set to Peak Detect Function and Specified Bandwidth with Maximum Hold Mode.

f. If the emission level of the EUT in peak mode was 10dB lower than the limit specified, then testing could be stopped and the peak values of the EUT would be reported. Otherwise

the emissions that did not have 10dB margin would be re-tested one by one using peak, quasi-peak or average method as specified and then reported in a data sheet.

Above 1GHz test procedure as below:

g. Different between above is the test site, change from Semi- Anechoic Chamber to fully Anechoic Chamber and change form table 0.8 metre to 1.5 metre(Above 18GHz the distance is 1 meter and table is 1.5 metre).

h. Test the EUT in the lowest channel ,the middle channel ,the Highest channel.

Note:

Both horizontal and vertical antenna polarities were tested and performed pretest to three orthogonal axis. The worst case emissions were reported.

Above 1GHz test procedure as below:

a.The EUT was placed on the top of a rotating table 1.5 meters above the ground at a 3 meter camber. The table was rotated 360 degrees to determine the position of the highest radiation.

b.The EUT was set 3 meters away from the interference-receiving antenna, which was mounted on the top of a variable-height antenna tower.

c.The antenna height is varied from one meter to four meters above the ground to determine the maximum value of the field strength. Both horizontal and vertical polarizations of the antenna are set to make the measurement.

d.For each suspected emission, the EUT was arranged to its worst case and then the antenna was tuned to heights from 1 meter to 4 meters and the rota table was turned from 0 degrees to 360 degrees to find the maximum reading.

e.The test-receiver system was set to Peak Detect Function and Specified Bandwidth with Maximum Hold Mode.

f. If the emission level of the EUT in peak mode was 10dB lower than the limit specified, then testing could be stopped and the peak values of the EUT would be reported. Otherwise the emissions that did not have 10dB margin would be re-tested one by one using peak, quasi-peak or average method as specified and then reported in a data sheet.

g.Test the EUT in the lowest channel,the Highest channel.

Note:

Both horizontal and vertical antenna polarities were tested and performed pretest to three orthogonal axis. The worst case emissions were reported.

7.4 EUT operating Conditions

The EUT was configured for testing in a typical fashion (as a customer would normally use it). The EUT has been programmed to continuously transmit during test. This operating condition was tested and used to collect the included data.

7.5 Test Result

Below 30MHz

Temperature:	26℃	Relative Humidtity:	24%
Pressure:	101 kPa	Test Voltage :	DC 3.7V
Test Mode :	Mode 5	Polarization :	--

Freq.	Reading	Limit	Margin	State
(MHz)	(dBuV/m)	(dBuV/m)	(dB)	P/F
--	--	--	--	PASS
--	--	--	--	PASS

Note:
The amplitude of spurious emissions which are attenuated by more than 20dB below the permissible value has no need to be reported.
Distance extrapolation factor =40 log (specific distance/test distance)(dB);
Limit line = specific limits(dBuv) + distance extrapolation factor.

Between 30MHz – 1GHz

Temperature:	26℃	Relative Humidtity:	54%
Pressure:	101 kPa	Test Voltage :	DC 3.7V
Test Mode :	Mode 5	Polarization :	Horizontal

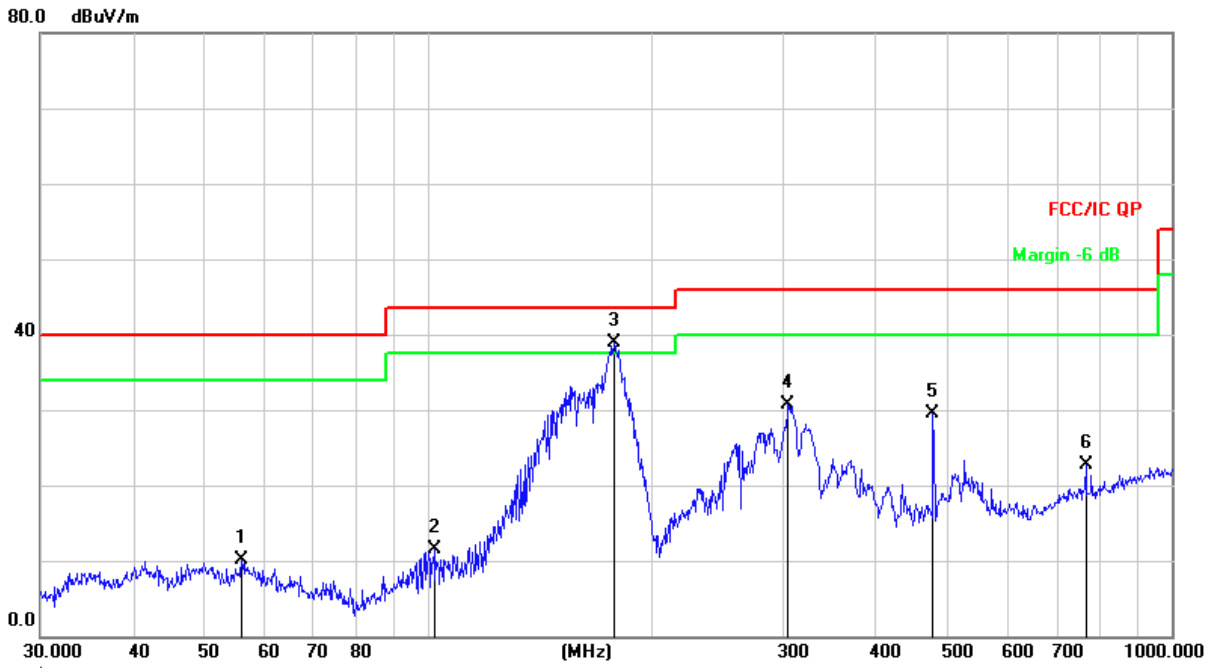

Remark:
Factor = Antenna Factor + Cable Loss – Pre-amplifier.

No.	Mk.	Freq.	Reading Level	Correct Factor	Measure-ment	Limit	Over	
		MHz	dBuV	dB	dBuV/m	dB/m	dB	Detector
1		56.0007	25.55	-15.49	10.06	40.00	-29.94	QP
2		101.6443	27.80	-16.39	11.41	43.50	-32.09	QP
3	*	177.5092	56.62	-17.74	38.88	43.50	-4.62	QP
4		304.6099	44.11	-13.47	30.64	46.00	-15.36	QP
5		477.1694	38.93	-9.41	29.52	46.00	-16.48	QP
6		766.0571	26.87	-4.12	22.75	46.00	-23.25	QP

Temperature:	26℃	Relative Humidtity:	54%
Pressure:	101 kpa	Test Voltage :	DC 3.7V
Test Mode :	Mode 5	Polarization :	Vertical

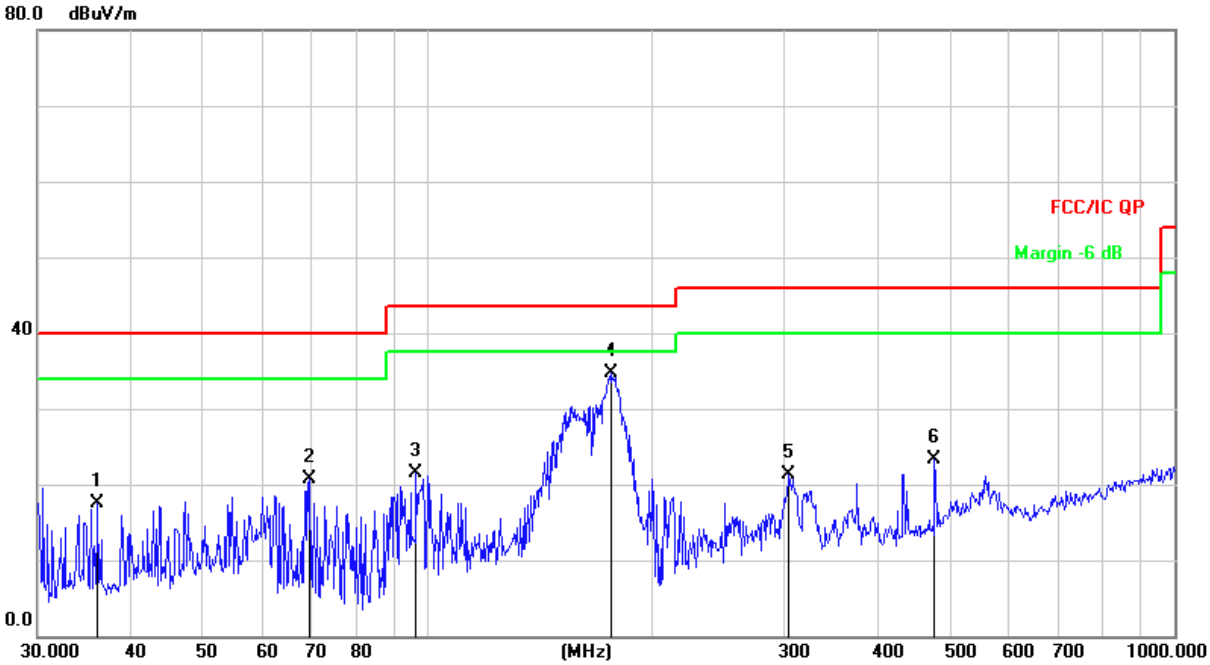

Remark:
Factor = Antenna Factor + Cable Loss – Pre-amplifier.

No.	Mk.	Freq.	Reading Level	Correct Factor	Measure-ment	Limit	Over	
		MHz	dBuV	dB	dBuV/m	dB/m	dB	Detector
1		36.1272	33.62	-16.13	17.49	40.00	-22.51	QP
2		69.3568	38.76	-18.04	20.72	40.00	-19.28	QP
3		96.4362	38.46	-16.93	21.53	43.50	-21.97	QP
4	*	176.2686	52.48	-17.82	34.66	43.50	-8.84	QP
5		304.6099	34.86	-13.47	21.39	46.00	-24.61	QP
6		477.1694	32.66	-9.41	23.25	46.00	-22.75	QP

Between 1GHz – 25GHz

Polar (H/V)	Frequency (MHz)	Reading Level (dBuV/m)	Correct Factor (dB)	Measure-ment (dBuV/m)	Limits (dBuV/m)	Over (dB)	Detector Type
GFSK Low channel							
V	4804.00	54.49	-0.43	54.06	74.00	-19.94	PK
V	4804.00	44.73	-0.43	44.30	54.00	-9.70	AV
V	7206.00	43.81	8.31	52.12	74.00	-21.88	PK
V	7206.00	34.79	8.31	43.10	54.00	-10.90	AV
H	4804.00	52.44	-0.43	52.01	74.00	-21.99	PK
H	4804.00	41.75	-0.43	41.32	54.00	-12.68	AV
H	7206.00	41.35	8.31	49.66	74.00	-24.34	PK
H	7206.00	32.56	8.31	40.87	54.00	-13.13	AV
GFSK Middle channel							
V	4882.00	50.67	-0.38	50.29	74.00	-23.71	PK
V	4882.00	42.83	-0.38	42.45	54.00	-11.55	AV
V	7323.00	42.98	8.83	51.81	74.00	-22.19	PK
V	7323.00	34.91	8.83	43.74	54.00	-10.26	AV
H	4882.00	48.88	-0.38	48.50	74.00	-25.50	PK
H	4882.00	38.68	-0.38	38.30	54.00	-15.70	AV
H	7323.00	40.66	8.83	49.49	74.00	-24.51	PK
H	7323.00	33.53	8.83	42.36	54.00	-11.64	AV
GFSK High channel							
V	4960.00	52.46	-0.32	52.14	74.00	-21.86	PK
V	4960.00	43.34	-0.32	43.02	54.00	-10.98	AV
V	7440.00	46.05	9.35	55.40	74.00	-18.60	PK
V	7440.00	36.61	9.35	45.96	54.00	-8.04	AV
H	4960.00	49.52	-0.32	49.20	74.00	-24.80	PK
H	4960.00	39.28	-0.32	38.96	54.00	-15.04	AV
H	7440.00	43.76	9.35	53.11	74.00	-20.89	PK
H	7440.00	36.29	9.35	45.64	54.00	-8.36	AV

Remark:
1.Emission Level = Meter Reading + Factor,
Factor = Antenna Factor + Cable Loss – Pre-amplifier.
Over= Emission Level - Limit
2.If peak below the average limit, the average emission was no test.
3. In restricted bands of operation, The spurious emissions below the permissible value more than 20dB
4. The amplitude of spurious emissions which are attenuated by more than 20dB below the permissible value has no need to be reported.
5.All the Modulation are test, the worst mode is GFSK, the data recording in the report.

8. RADIATED BAND EMISSION MEASUREMENT AND RESTRICTED BANDS OF OPERATION

8.1 Block Diagram Of Test Setup

Radiated Emission Test-Up Frequency Above 1GHz

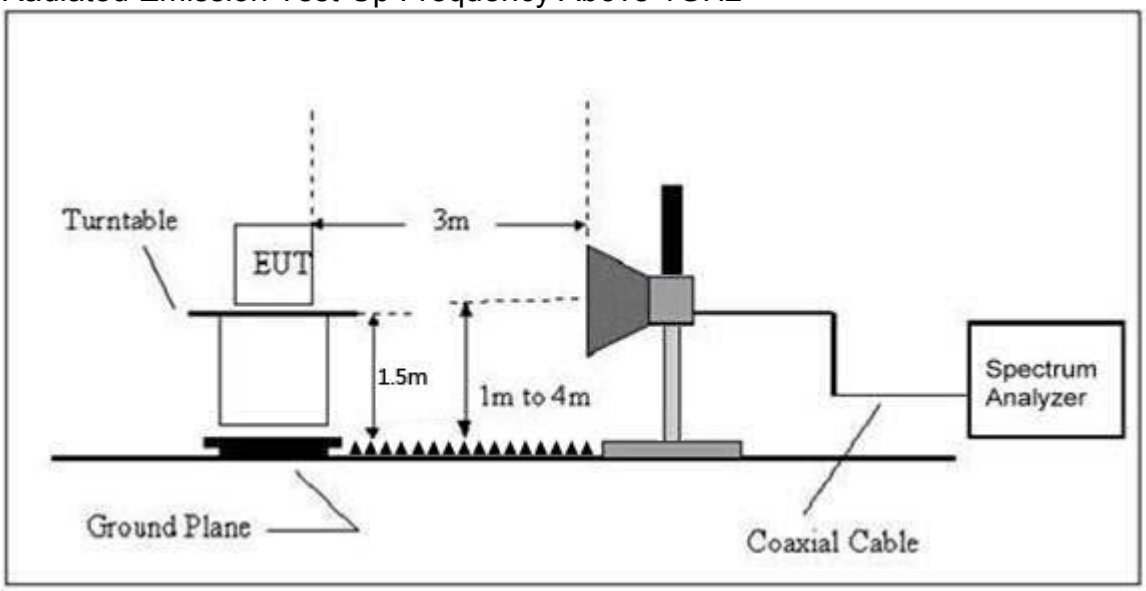

8.2 Limit

FCC Part15 C Section 15.209 and 15.205

(a) Except as shown in paragraph (d) of this section, only spurious emissions are permitted in any of the frequency bands listed below:

MHz	MHz	MHz	GHz
0.090-0.110	16.42-16.423	399.9-410	4.5-5.15
[1]0.495-0.505	16.69475-16.69525	608-614	5.35-5.46
2.1735-2.1905	16.80425-16.80475	960-1240	7.25-7.75
4.125-4.128	25.5-25.67	1300-1427	8.025-8.5
4.17725-4.17775	37.5-38.25	1435-1626.5	9.0-9.2
4.20725-4.20775	73-74.6	1645.5-1646.5	9.3-9.5
6.215-6.218	74.8-75.2	1660-1710	10.6-12.7
6.26775-6.26825	108-121.94	1718.8-1722.2	13.25-13.4
6.31175-6.31225	123-138	2200-2300	14.47-14.5
8.291-8.294	149.9-150.05	2310-2390	15.35-16.2
8.362-8.366	156.52475-156.52525	2483.5-2500	17.7-21.4
8.37625-8.38675	156.7-156.9	2690-2900	22.01-23.12
8.41425-8.41475	162.0125-167.17	3260-3267	23.6-24.0
12.29-12.293	167.72-173.2	3332-3339	31.2-31.8
12.51975-12.52025	240-285	3345.8-3358	36.43-36.5
12.57675-12.57725	322-335.4	3600-4400	([2])
13.36-13.41			

LIMITS OF RADIATED EMISSION MEASUREMENT (Above 1000MHz)

FREQUENCY (MHz)	Limit (dBuV/m) (at 3M)	
	PEAK	AVERAGE
Above 1000	74	54

Notes:
(1)The limit for radiated test was performed according to FCC PART 15C.
(2)The tighter limit applies at the band edges.
(3)Emission level (dBuV/m)=20log Emission level (uV/m).

8.3 Test procedure

Receiver Parameter	Setting
Attenuation	Auto
Start Frequency	2300MHz
Stop Frequency	2520
RB / VB (emission in restricted band)	1 MHz / 1 MHz for Peak, 1 MHz / 10Hz for Average

Above 1GHz test procedure as below:

a.The EUT was placed on the top of a rotating table 1.5 meters above the ground at a 3 meter camber. The table was rotated 360 degrees to determine the position of the highest radiation.

b.The EUT was set 3 meters away from the interference-receiving antenna, which was mounted on the top of a variable-height antenna tower.

c.The antenna height is varied from one meter to four meters above the ground to determine the maximum value of the field strength. Both horizontal and vertical polarizations of the antenna are set to make the measurement.

d.For each suspected emission, the EUT was arranged to its worst case and then the antenna was tuned to heights from 1 meter to 4 meters and the rota table was turned from 0 degrees to 360 degrees to find the maximum reading.

e.The test-receiver system was set to Peak Detect Function and Specified Bandwidth with Maximum Hold Mode.

f. If the emission level of the EUT in peak mode was 10dB lower than the limit specified, then testing could be stopped and the peak values of the EUT would be reported. Otherwise the emissions that did not have 10dB margin would be re-tested one by one using peak, quasi-peak or average method as specified and then reported in a data sheet.

g.Test the EUT in the lowest channel,the Highest channel.

Note:

Both horizontal and vertical antenna polarities were tested and performed pretest to three orthogonal axis. The worst case emissions were reported.

8.4 EUT operating Conditions

The EUT was configured for testing in a typical fashion (as a customer would normally use it). The EUT has been programmed to continuously transmit during test. This operating condition was tested and used to collect the included data.

8.5 Test Result

	Polar (H/V)	Frequency (MHz)	Reading Level (dBuV/m)	Correct Factor (dB)	Measure-ment (dBuV/m)	Limits (dBuV/m)		Result
					PK	□PK	AV	
GFSK	Low Channel 2402MHz							
	H	2390.00	57.25	-6.70	50.55	74.00	54.00	PASS
	H	2400.00	48.90	-6.71	42.19	74.00	54.00	PASS
	V	2390.00	57.60	-6.70	50.90	74.00	54.00	PASS
	V	2400.00	49.05	-6.71	42.34	74.00	54.00	PASS
	High Channel 2480MHz							
	H	2483.50	56.65	-6.79	49.86	74.00	54.00	PASS
	H	2485.00	48.86	-6.81	42.05	74.00	54.00	PASS
	V	2483.50	58.05	-6.79	51.26	74.00	54.00	PASS
	V	2485.00	49.64	-6.81	42.83	74.00	54.00	PASS
Pi/4DQPSK	Low Channel 2402MHz							
	H	2390.00	56.95	-6.70	50.25	74.00	54.00	PASS
	H	2400.00	48.85	-6.71	42.14	74.00	54.00	PASS
	V	2390.00	57.19	-6.70	50.49	74.00	54.00	PASS
	V	2400.00	48.88	-6.71	42.17	74.00	54.00	PASS
	High Channel 2480MHz							
	H	2483.50	56.83	-6.79	50.04	74.00	54.00	PASS
	H	2485.00	49.08	-6.81	42.27	74.00	54.00	PASS
	V	2483.50	57.38	-6.79	50.59	74.00	54.00	PASS
	V	2485.00	48.44	-6.81	41.63	74.00	54.00	PASS
8DPSK	Low Channel 2402MHz							
	H	2390.00	57.73	-6.70	51.03	74.00	54.00	PASS
	H	2400.00	50.34	-6.71	43.63	74.00	54.00	PASS
	V	2390.00	56.83	-6.70	50.13	74.00	54.00	PASS
	V	2400.00	49.23	-6.71	42.52	74.00	54.00	PASS
	High Channel 2480MHz							
	H	2483.50	58.07	-6.79	51.28	74.00	54.00	PASS
	H	2485.00	50.47	-6.81	43.66	74.00	54.00	PASS
	V	2483.50	56.80	-6.79	50.01	74.00	54.00	PASS
	V	2485.00	49.73	-6.81	42.92	74.00	54.00	PASS

Remark:
1. Emission Level = Meter Reading + Factor,
Factor = Antenna Factor + Cable Loss – Pre-amplifier.
Over= Emission Level - Limit
2. If the PK measured levels comply with average limit, then the average level were deemed to comply with average limit.
3 In restricted bands of operation, The spurious emissions below the permissible value more than 20dB
4. The amplitude of spurious emissions which are attenuated by more than 20dB below the permissible value has no need to be reported.

9. CONDUCTED EMISSION

9.1 Block Diagram Of Test Setup

9.2 Limit

Regulation 15.247 (d),In any 100 kHz bandwidth outside the frequency band in which the spread spectrum or digitally modulated intentional radiator is operating, the radio frequency power that is produced by the intentional radiator shall be at least 20 dB below that in the 100 kHz bandwidth within the band that contains the highest level of the desired power, based on either an RF conducted or a radiated measurement, provided the transmitter demonstrates compliance with the peak conducted power limits. If the transmitter complies with the conducted power limits based on the use of RMS averaging over a time interval, as permitted under paragraph (b)(3) of this section, the attenuation required under this paragraph shall be 30 dB instead of 20 dB. Attenuation below the general limits specified in §15.209(a) is not required. In addition, radiated emissions which fall in the restricted bands, as defined in §15.205(a), must also comply with the radiated emission limits specified in §15.209(a) (see §15.205(c))

9.3 Test procedure

1. Remove the antenna from the EUT and then connect a low RF cable from the antenna port to the spectrum;

2. Set the spectrum analyzer:

Below 30MHz:

RBW = 100kHz, VBW = 300kHz, Sweep = auto

Detector function = peak, Trace = max hold

Above 30MHz:

RBW = 100KHz, VBW = 300KHz, Sweep = auto

Detector function = peak, Trace = max hold

9.4 Test Result

Temperature：	26℃	Relative Humidity：	54%
Test Voltage ：	DC 3.7V	Remark:	N/A

30MHz – 25GHz

GFSK Low Channel

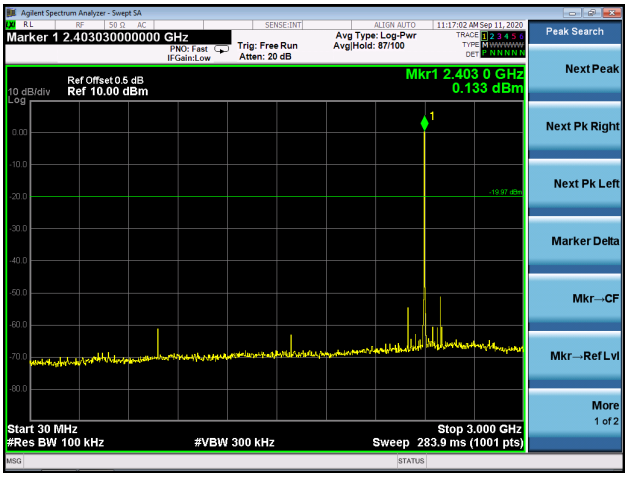

GFSK Middle Channel

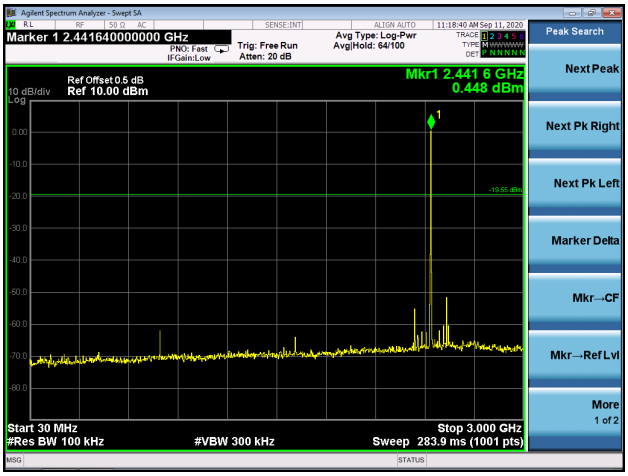

GFSK High Channel

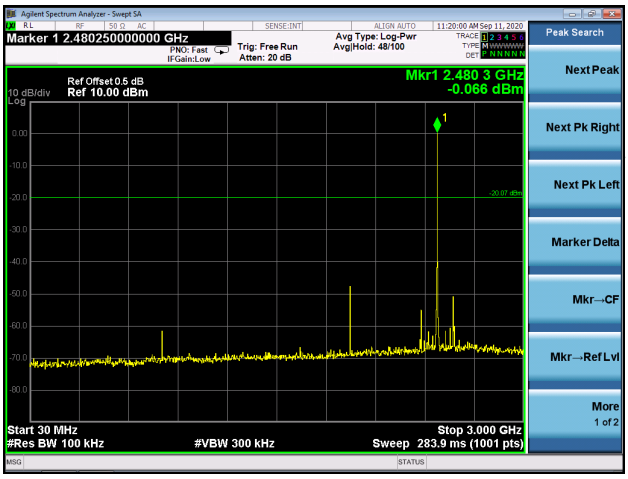

Pi/4 DQPSK Low Channel

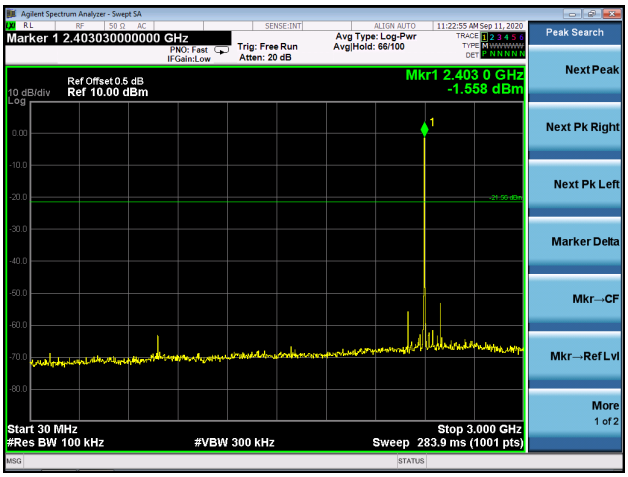

Pi/4 DQPSK Middle Channel

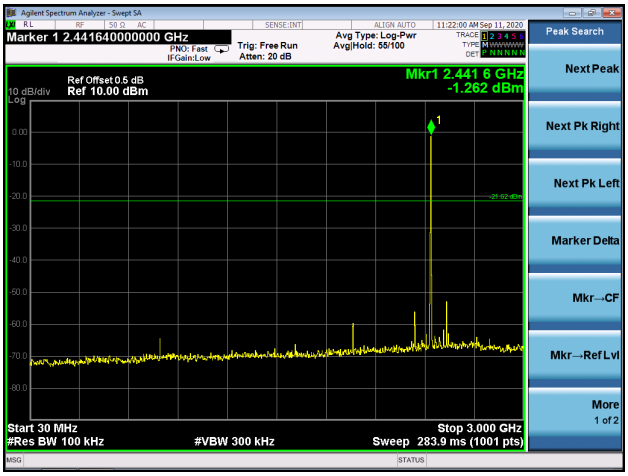
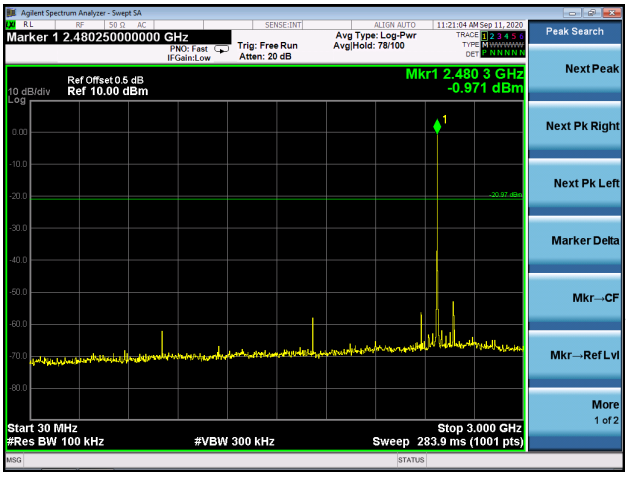
Pi/4 DQPSK High Channel