EMC TEST REPORT

FCC 47 CFR Part 15B, ISED ICES-003 Issue 6

Report Reference No	G0M-2008-9229-EF0115B-V02
Testing Laboratory	Eurofins Product Service GmbH
Address	Storkower Str. 38c 15526 Reichenwalde Germany
Accreditation	DAkkS - Registration number : D-PL-12092-01-03 (ISED) ISED Testing Laboratory site: 3470A-2 DAkkS - Registration number : D-PL-12092-01-04 (FCC) FCC Filed Test Laboratory, Reg.-No.: 96970
Applicant	Hempel A/S
Address	Lundtoftegaardsvej 91 2800 Kgs. Lyngby Denmark
Test Specification Standard(s)	47 CFR Part 15 Subpart B ISED ICES-003 Issue 6 ANSI C63.4:2014+A1:2017
Non-Standard Test Method	None
Equipment under Test (EUT):	
Product Description	Temperature and humidity logger with BLE and LoRa communication
Model(s)	915 MHz
Additional Model(s)	None
Brand Name(s)	None
Hardware Version(s)	1.3.0
Software Version(s)	BLE v1.0.0, LoRa v1.4.0
FCC-ID	2AXRV-HT915
IC	-/-
Test Result	**PASSED**

Possible test case verdicts:		
required by standard but not tested	N/T	
not required by standard	N/R	
required by standard but not appl. to test object	N/A	
test object does meet the requirement	P(PASS)	
test object does not meet the requirement	F(FAIL)	
Testing:		
Date of receipt of test item	2020-12-07	
Report:		
Compiled by	Matthias Handrik	
Tested by (+ signature) (Responsible for Test)	Matthias Handrik	.....
Approved by (+ signature) (Test Lab Engineer)	Andreas Pflug	.....
Date of Issue	2021-02-15	
Total number of pages	27	
General Remarks:		
The test results presented in this report relate only to the object tested. **The results contained in this report reflect the results for this particular model and serial number. It is the responsibility of the manufacturer to ensure that all production models meet the intent of the requirements detailed within this report.** This report shall not be reproduced, except in full, without the written approval of the Issuing testing laboratory.		
Additional Comments:		

ABBREVIATIONS AND ACRONYMS

Acronyms	
Acronym	Description
EUT	Equipment Under Test
FCC	Federal Communications Commission
ISED	Innovation, Science and Economic Development Canada
T_{NOM}	Nominal operating temperature
V_{NOM}	Nominal supply voltage

VERSION HISTORY

Version History			
Version	Issue Date	Remarks	Revised By
01	2021-01-22	Initial Release	
02	2021-02-15	Replaced document: G0M-2008-9229-EF0115B-V01 Replaced by: G0M-2008-9229-EF0115B-V02 Reason: Add additional EUT picture.	M.Handrik

REPORT INDEX

1 Equipment (Test Item) Under Test 6
1.1 Equipment Ports 7
1.2 Equipment Photos - Internal 8
1.3 Equipment Photos - External 9
1.4 Support Equipment 12
1.5 Operational Modes 13
1.6 EUT Configuration 14
1.7 Sample emission level calculation 15
2 Result Summary 16
2.1 Test Conditions and Results - Radiated emissions acc. to ANSI C63.4 17

1 Equipment (Test Item) Under Test

Description	Temperature and humidity logger with BLE and LoRa communication	
Model	915 MHz	
Additional Model(s)	None	
Brand Name(s)	None	
Serial Number(s)	Prototype	
Hardware Version(s)	1.3.0	
Software Version(s)	BLE v1.0.0, LoRa v1.4.0	
EUT Dimension [cm]	10.4 x 7 x 2.8	
FCC-ID	2AXRV-HT915	
IC	-/-	
Class	Class B	
Equipment type	Table top	
Highest internal frequency [MHz]	2400	
Radio Module I	Type	Bluetooth Low Energy module
	Model	nRF52832
	Manufacturer	nordic
	FCC-ID	Unspecified
	IC	Unspecified
Radio Module II	Type	LoRa module
	Model	SX1262
	Manufacturer	Semtech
	FCC-ID	Unspecified
	IC	Unspecified
Supply Voltage	V_{NOM}	3.6 VDC non rechargeable lithium battery
AC/DC-Adaptor	None	
Manufacturer	Hempel A/S Lundtoftegaardsvej 91 2800 Kgs. Lyngby Denmark	

1.1 Equipment Ports

Name	Type	Attributes	Comment
None			
Description:			
AC	AC mains power input/output port		
DC	DC power input/output port		
BAT	DC power input port connected to external battery		
IO	Input/Output port		
TP	Telecommunication port		
NE	Non-electrical port		

1.2 Equipment Photos - Internal

EUT PCB TOP
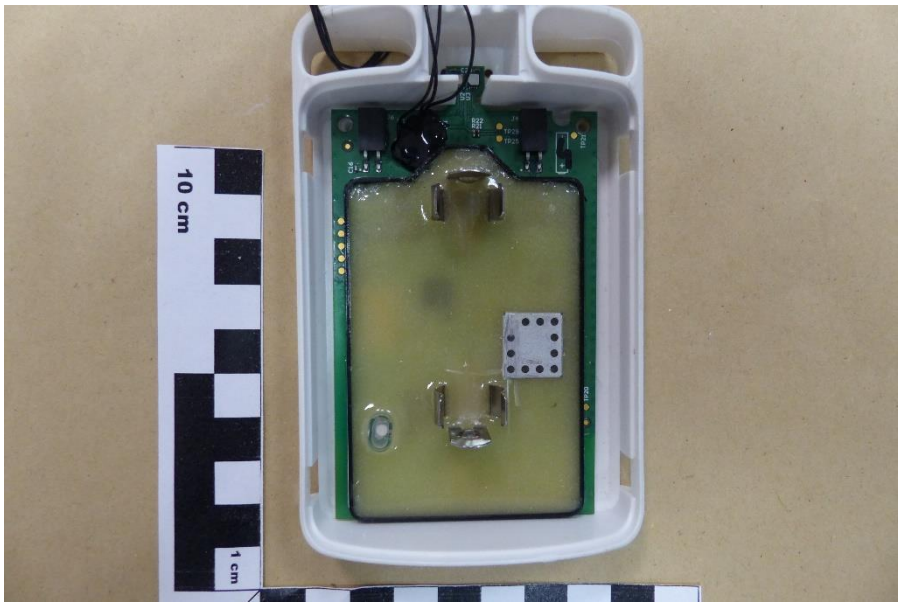

EUT PCB BOTTOM
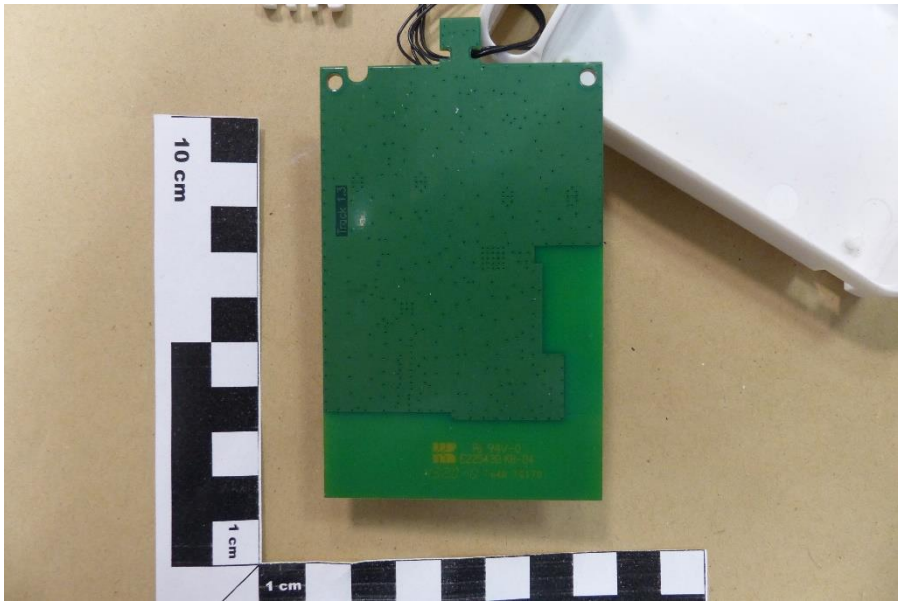

1.3 Equipment Photos - External

EUT FRONT

EUT BACK

EUT RIGHT

EUT LEFT

EUT BOTTOM

EUT TOP

1.4 Support Equipment

Product Type	Device	Manufacturer	Model	Comment
AE	Laptop	HP	EliteBook 840	Customer Support Equipment
AE	USB-UART converter	unspecified	unspecified	Customer Support Equipment
Description:				
AE	Auxiliary Equipment			
SIM	Simulator			
MON	Monitoring Equipment			
CBL	Connecting Cable			
Comment:				

1.5 Operational Modes

Mode #	Description
1	EUT's LED lights with random changing colors. EUT performs constant communication with internal sensors. BLE is in the Advertising state and continuously sends packets containing with user data. LoRa is in TX test mode on 915 MHz.(without companion device)
Comment:	

1.6 EUT Configuration

Configuration #	Description
1	EUT assambled with 3.6V battery. USB-UART converter is connected to EUT and laptop. Via terminal program were the EUT configure. During measurement was USB-UART converter disconnected from EUT. **Block Diagram** 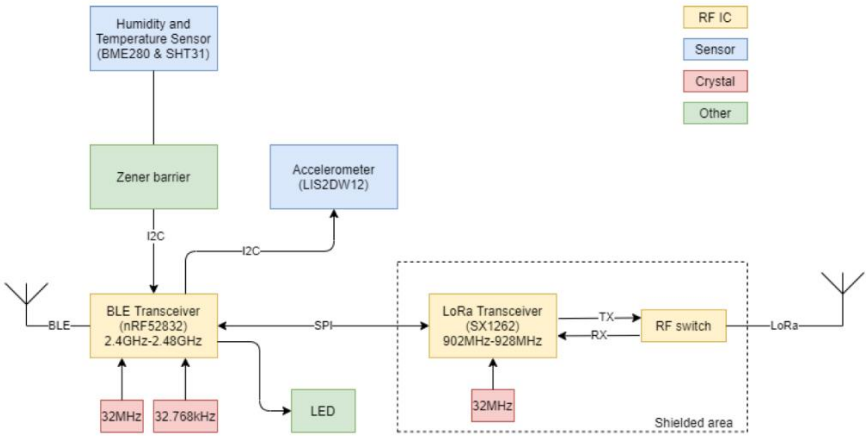
Comment:	

1.7 Sample emission level calculation

The following is a description of terms and a sample calculation, as appears in the radiated emissions data table. The numbers used in the calculation are for example only. There is no direct correlation to the specific data taken for the product described in this document:

Reading:

This is the reading obtained on the spectrum analyser in dBµV. Any external preamplifiers used are taken into account through internal analyser settings.

A.F.:

This is the antenna factor for the receiving antenna. It is a conversion factor, which converts electric fields strengths to voltages, which can be measured directly on the spectrum analyser. It is treated as a loss in dB. Cable losses have been included with the A.F. to simplify the calculations. The antenna factor is used in calculations as follows:

Reading on Analyser (dBµV) + A.F. (dB/m) = Net field strength (dBµV/m)

Net:

This is the net field strength measurement (as shown above).

Limit:

This is the FCC Class B radiated emission limit (in units of dBµV/m). The FCC limits are given in units of µV/m. The following formula is used to convert the units of µV/m to dBµV/m:

Limit (dBµV/m) = 20*log (µV/m)

Margin:

This is the margin of compliance below the FCC limit. The units are given in dB. A negative margin indicates the emission was below the limit. A positive margin indicates that the emission exceeds the limit.

Example only:

Reading + AF	= Net Reading	:	Net reading - FCC limit	= Margin
+21.5 dBµV + 26 dB/m	= 47.5 dBµV/m	:	47.5 dBµV/m - 57.0 dBµV/m	= -9.5 dB

2 Result Summary

FCC 47 CFR Part 15B, ISED ICES-003 Issue 6				
Reference	**Requirement**	**Reference Method**	**Result**	**Remarks**
Emission				
FCC 15.109 ICES-003, 6.2	Radiated emissions	ANSI C63.4:2014 +A1:2017	PASS	-
FCC 15.107 ICES-003, 6.1	AC power line conducted emissions	ANSI C63.4:2014 +A1:2017	N/R	No relevant port
Comment:				

Possible Test Case Verdicts	
PASS	Test object does meet the requirements
FAIL	Test object does not meet the requirements
N/T	Required by standard but not tested
N/R	Not required by standard for the test object

2.1 Test Conditions and Results - Radiated emissions acc. to ANSI C63.4

2.1.1 Information

Test Information	
Reference	FCC 15.109, ICES-003, 6.2
Reference method	ANSI C63.4:2014+A1:2017 Section 8
Equipment class	Class B
Equipment type	Table top
Highest internal frequency [MHz]	2400
Measurement range	30 MHz to 12000 MHz
Temperature [°C]	23 ±3
Humidity [%]	27 ±3
Operator	Matthias Handrik
Date	2021-01-19

2.1.2 Setup

Measurement up to 1 GHz

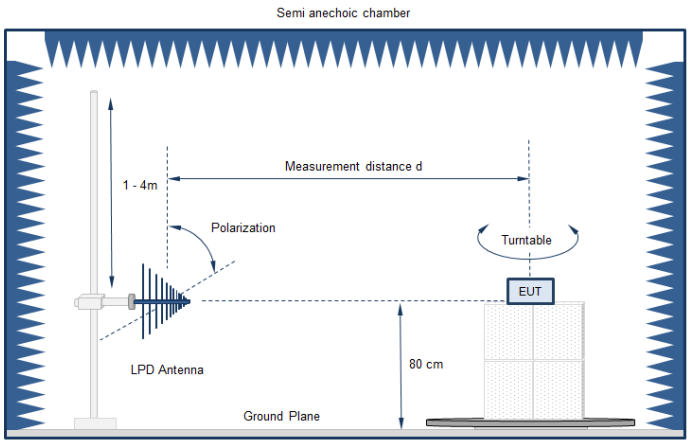

Measurement above 1 GHz

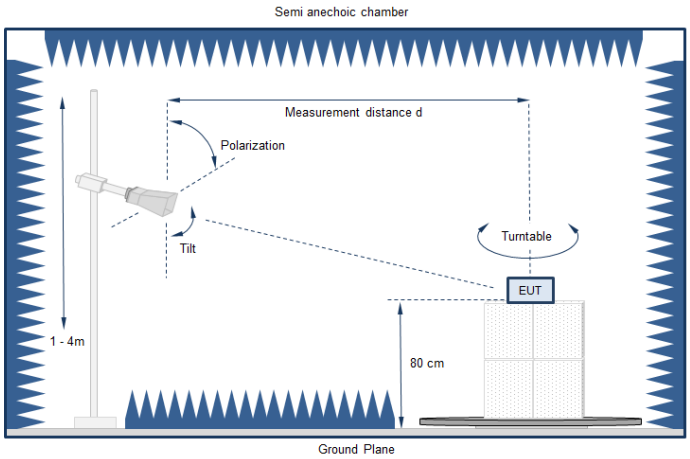

Equipment placement - Table top

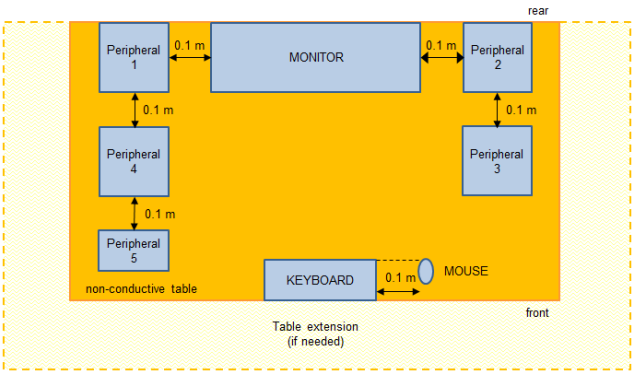

Test Setup

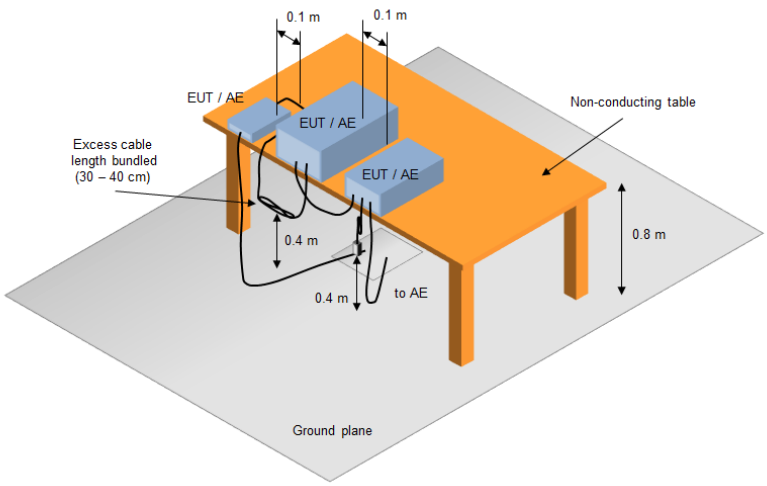

2.1.3 Equipment

Test Software			
Description	Manufacturer	Name	Version
EMC Software	DARE Instruments	Radimation	2020.1.8

Test Equipment					
Description	Manufacturer	Model	Identifier	Cal. Date	Cal. Due
Anechoic chamber	Frankonia	AC1	EF00062	2018-07	2021-07
EMI Test Receiver	Keysight	N9038A-526/WXP	EF01070	2020-06	2021-06
Biconical Antenna	R&S	HK 116	EF00030	2019-04	2022-04
LPD Antenna	R&S	HL 223	EF00187	2019-05	2022-05
Horn Antenna	Schwarzbeck	BBHA9120D	EF00018	2019-10	2022-10
Climatic Sensor	Embedded Data Systems, LLC.	280010000025417E	EF01054	2020-03	2021-03

2.1.4 Procedure

Exploratory measurement
1. The EUT was placed on a non-conductive table at a height of 0.8m. 2. The EUT and support equipment, if needed, were set up to simulate typical usage. 3. Cables, of type and length specified by the manufacturer, were connected to at least one port of each type and were terminated by a device or simulating load of actual usage. 4. The antenna was placed at a distance of 3 or 10 m. 5. The received signal was monitored at the measurement receiver. 6. This procedure has to be performed in both antenna polarizations, horizontal and vertical. 7. The arrangement of the equipment with the maximum emission level is shown on the setup picture at item 2.1.2.3

Final measurement
1. The EUT was placed on a 0.8 m non-conductive table at a 3 m distance from the receive antenna. The antenna output was connected to the measurement receiver. 2. A biconical antenna was used for the frequency range 30 – 200 MHz, a logarithmic periodical antenna was used for the frequency range from 200 – 1000 MHz. Above one 1 GHz a Double Ridged Broadband Horn antenna was used. The antenna was placed on an adjustable height antenna mast. 3. The EUT and cable arrangement were based on the exploratory measurement results. 4. Emissions were maximized at each frequency by rotating the EUT and adjusting the receive antenna height and polarization. The maximum values were recorded. 5. The test data of the worst-case conditions were recorded and shown on the next pages.

2.1.5 Limits

Class B @ 3 m		
Frequency [MHz]	Detector	Limit [dBµV/m]
30 - 88	Quasi-peak	40
88 - 216	Quasi-peak	43.5
216 - 960	Quasi-peak	46
960 - 1000	Quasi-peak	54
> 1000	Peak Average	74 54

2.1.6 Results

Test Results			
Operational mode	EUT Configuration	Verdict	Remark
1	1	PASS	-

2.1.7 Setup Photos

Test setup

Test setup 30-200MHz
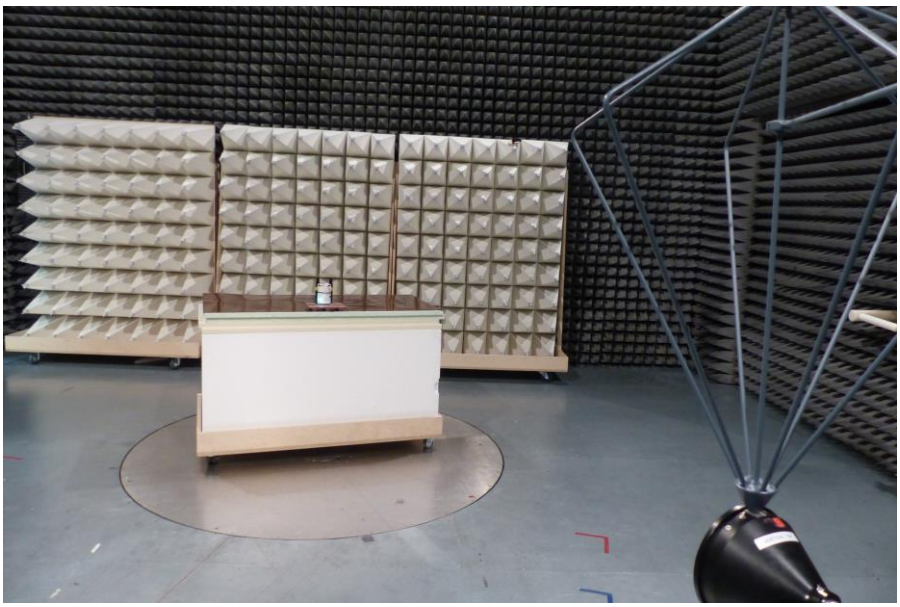

Test setup 200-1000MHz

Test setup 1-13GHz

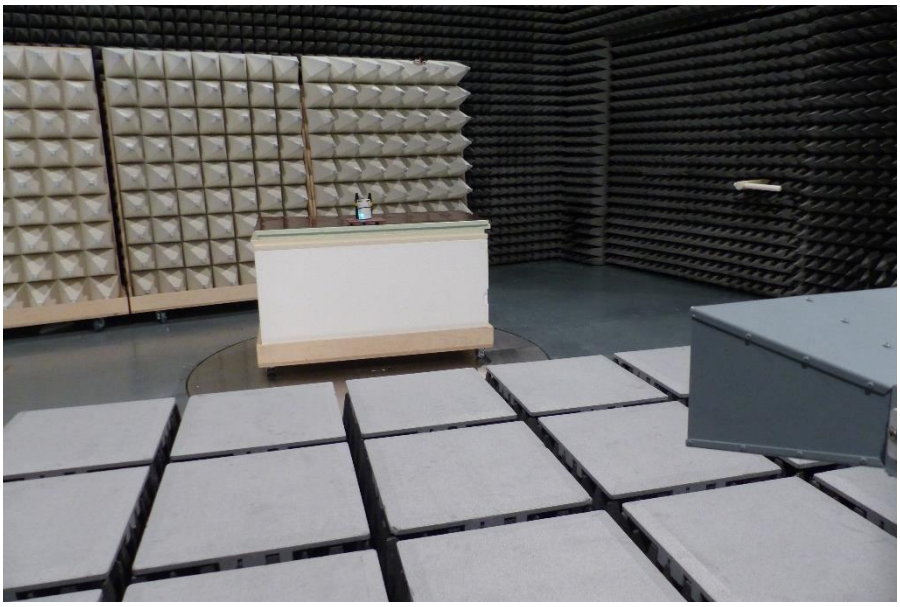

2.1.8 Records

Radiated emissions
according to FCC part 15B

Project Number:	G0M-2008-9229
Applicant:	Hempel A/S
Model Description:	Temperature and humidity logger with BLE and LoRa communication
Model:	915 MHz
Test Sample ID:	32167
Test Site:	Eurofins Product Service GmbH
Operator:	Mr. Handrik
Test Date:	2021-01-19
Operating Conditions:	ambient temperature: 23 °Celsius power input: 3.6V DC
Antenna:	Rohde & Schwarz HK 116, Vertical
Measurement Distance:	3m
Operational Mode & EUT Configuration:	mode 1 configuration 1
Note 1:	

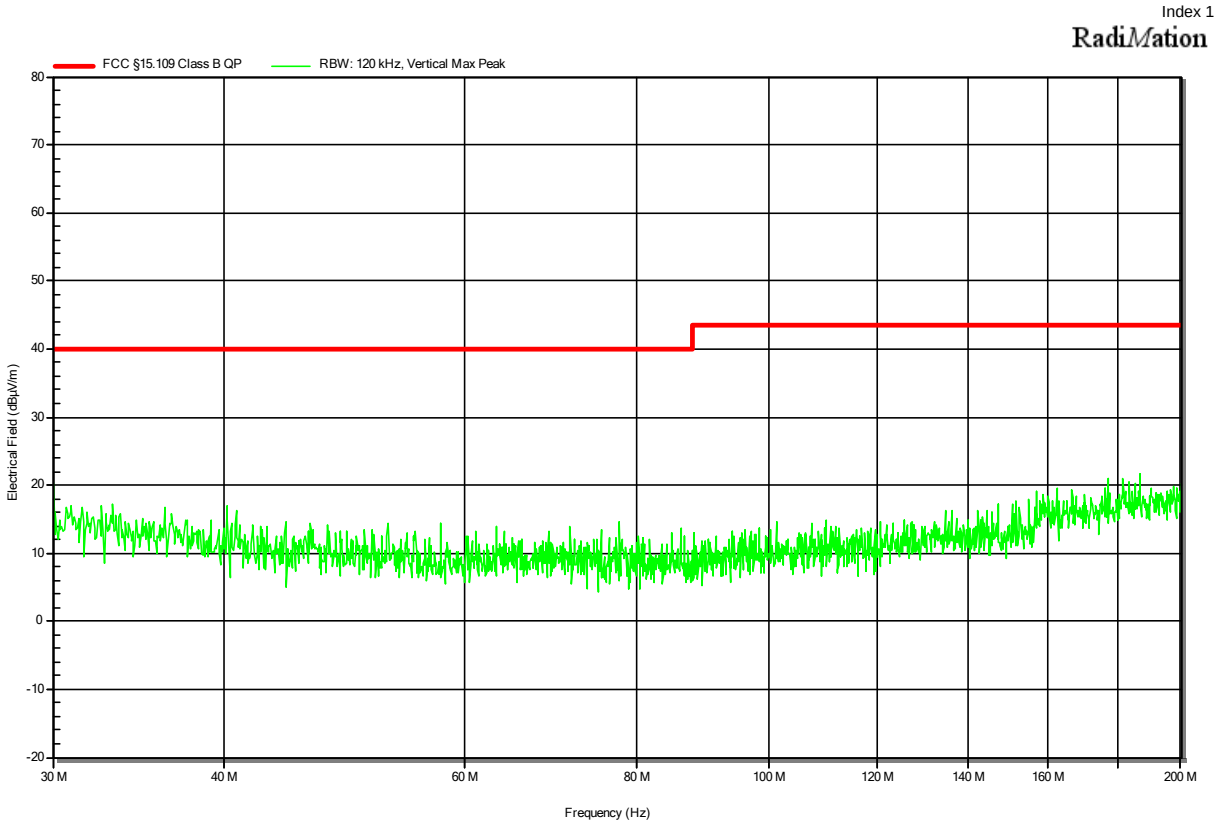

Radiated emissions
according to FCC part 15B

Project Number:	G0M-2008-9229
Applicant:	Hempel A/S
Model Description:	Temperature and humidity logger with BLE and LoRa communication
Model:	915 MHz
Test Sample ID:	32167
Test Site:	Eurofins Product Service GmbH
Operator:	Mr. Handrik
Test Date:	2021-01-19
Operating Conditions:	ambient temperature: 23 °Celsius power input: 3.6V DC
Antenna:	Rohde & Schwarz HK 116, Horizontal
Measurement Distance:	3m
Operational Mode & EUT Configuration:	mode 1 configuration 1
Note 1:	

Index 2

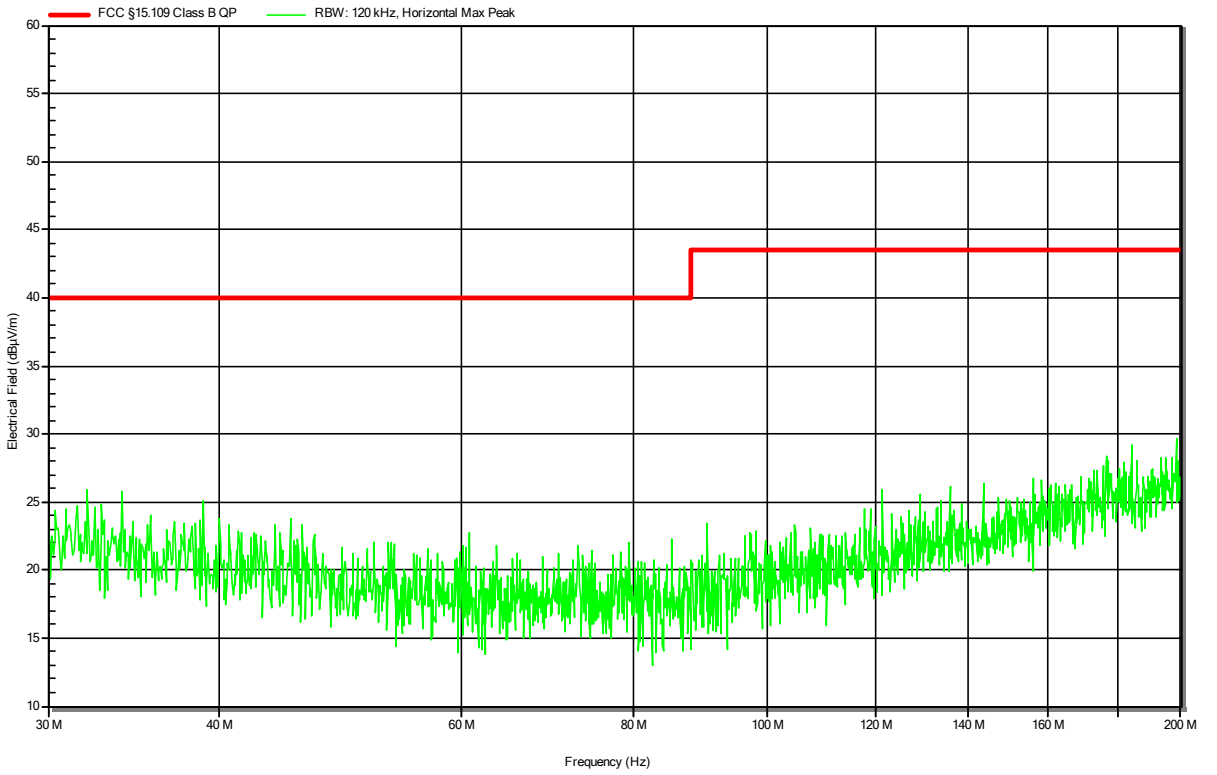

Radiated emissions
according to FCC part 15B

Project Number:	G0M-2008-9229
Applicant:	Hempel A/S
Model Description:	Temperature and humidity logger with BLE and LoRa communication
Model:	915 MHz
Test Sample ID:	32167
Test Site:	Eurofins Product Service GmbH
Operator:	Mr. Handrik
Test Date:	2021-01-19
Operating Conditions:	ambient temperature: 23 °Celsius power input: 3.6V DC
Antenna:	Rohde & Schwarz HL 223, Vertical
Measurement Distance:	3m
Operational Mode & EUT Configuration:	mode 1 configuration 1
Note 1:	

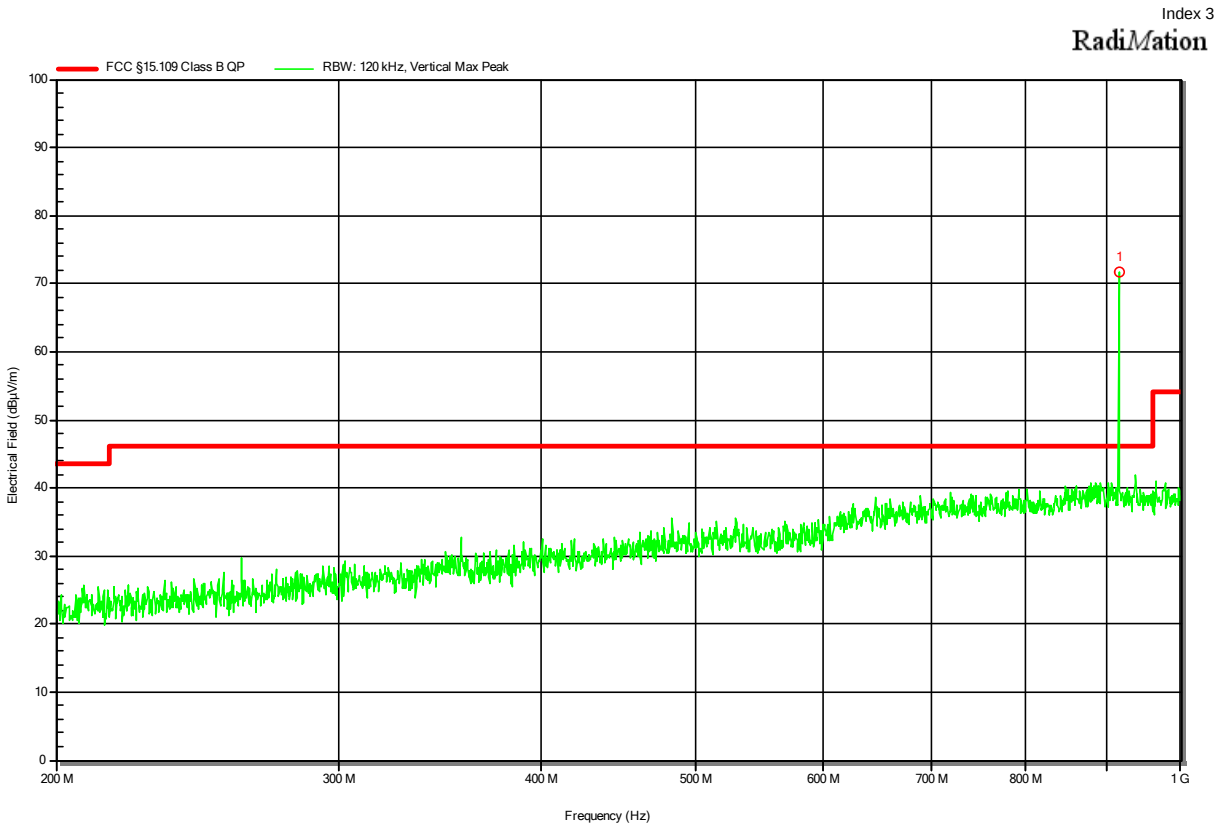

Peak Number	Frequency	Angle	Height
1	914.98 MHz	LoRa carrier	

Radiated emissions
according to FCC part 15B

Project Number:	G0M-2008-9229
Applicant:	Hempel A/S
Model Description:	Temperature and humidity logger with BLE and LoRa communication
Model:	915 MHz
Test Sample ID:	32167
Test Site:	Eurofins Product Service GmbH
Operator:	Mr. Handrik
Test Date:	2021-01-19
Operating Conditions:	ambient temperature: 23 °Celsius power input: 3.6V DC
Antenna:	Rohde & Schwarz HL 223, Horizontal
Measurement Distance:	3m
Operational Mode & EUT Configuration:	mode 1 configuration 1
Note 1:	

Index 4

RadiMation

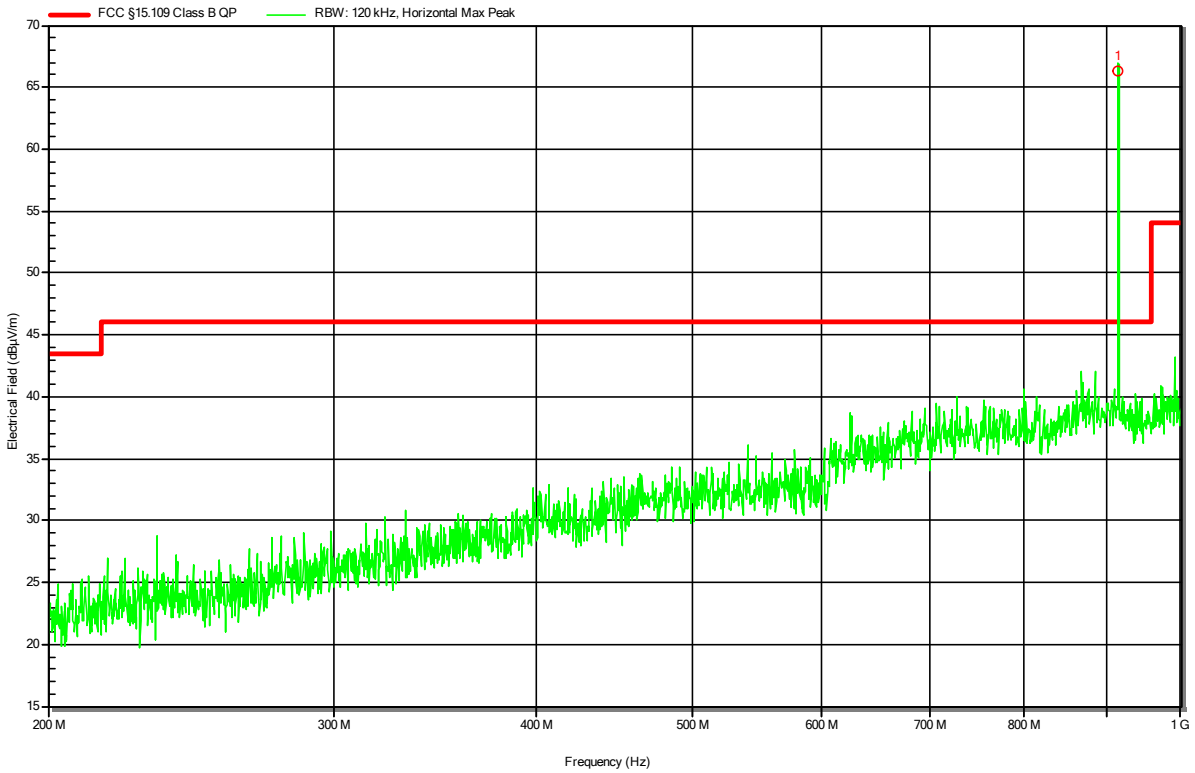

Peak Number	Frequency	Angle	Height
1	915.101 MHz	LoRa carrier	

Radiated emissions
according to FCC part 15B

Project Number:	G0M-2008-9229
Applicant:	Hempel A/S
Model Description:	Temperature and humidity logger with BLE and LoRa communication
Model:	915 MHz
Test Sample ID:	32167
Test Site:	Eurofins Product Service GmbH
Operator:	Mr. Handrik
Test Date:	2021-01-19
Operating Conditions:	ambient temperature: 23 °Celsius power input: 3.6V DC
Antenna:	Schwarzbeck BBHA 9120D, Vertical
Measurement Distance:	3m
Operational Mode & EUT Configuration:	mode 1 configuration 1
Note 1:	

Index 5

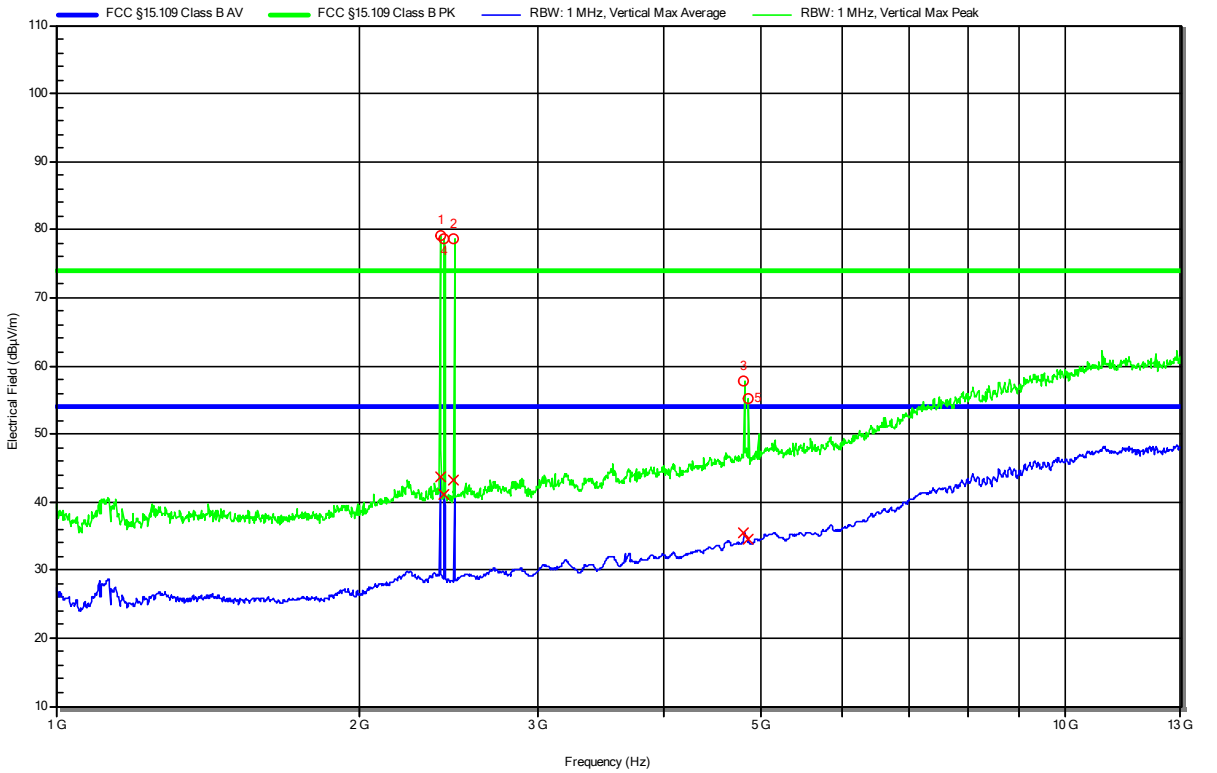

Peak Number	Frequency	Peak	Peak Limit	Peak Difference	Peak Status	Angle	Height
1	2.402 GHz	Bluetooth Low Energy carrier					
2	2.48 GHz	Bluetooth Low Energy carrier					
3	4.804 GHz	2nd harmonic Bluetooth Low Energy					
4	2.426 GHz	Bluetooth Low Energy carrier					
5	4.852 GHz	2nd harmonic Bluetooth Low Energy					

Radiated emissions
according to FCC part 15B

Project Number:	G0M-2008-9229
Applicant:	Hempel A/S
Model Description:	Temperature and humidity logger with BLE and LoRa communication
Model:	915 MHz
Test Sample ID:	32167
Test Site:	Eurofins Product Service GmbH
Operator:	Mr. Handrik
Test Date:	2021-01-19
Operating Conditions:	ambient temperature: 23 °Celsius power input: 3.6V DC
Antenna:	Schwarzbeck BBHA 9120D, Horizontal
Measurement Distance:	3m
Operational Mode & EUT Configuration:	mode 1 configuration 1
Note 1:	

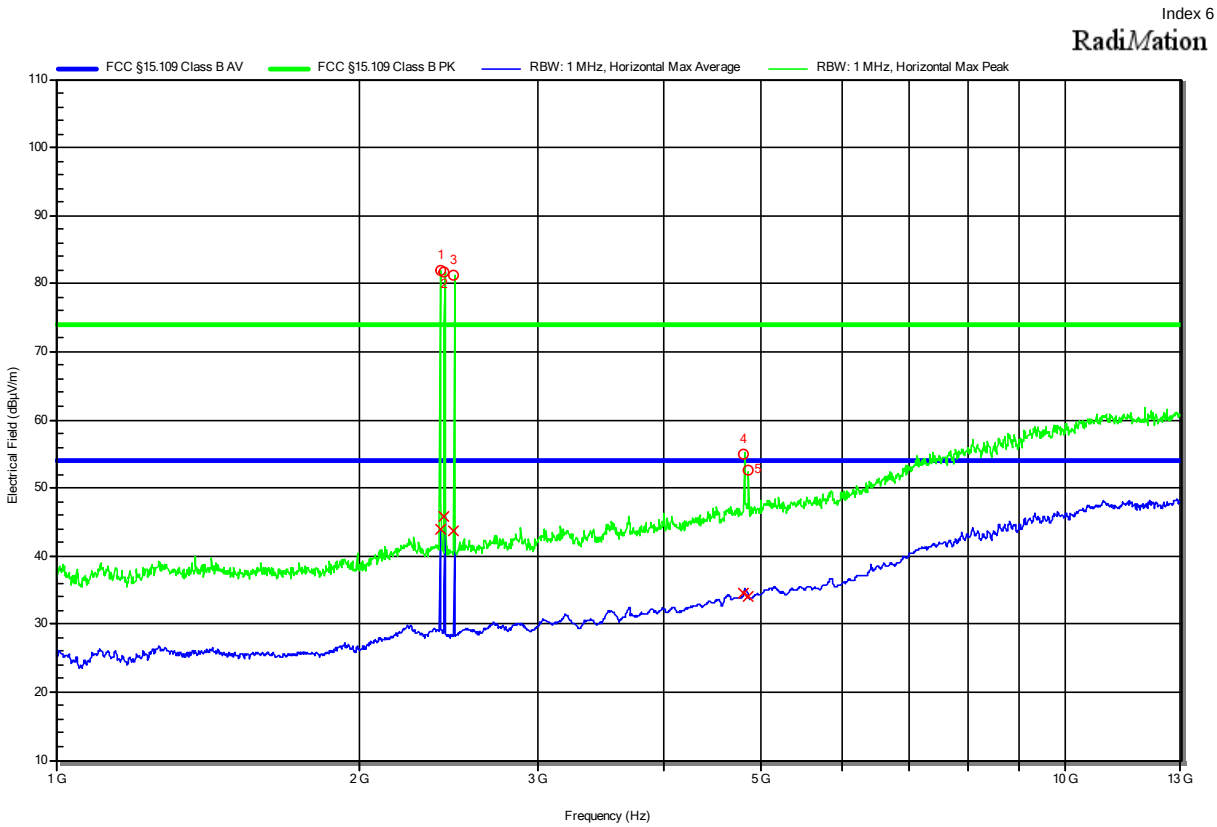

Peak Number	Frequency	Peak	Peak Limit	Peak Difference	Peak Status	Angle	Height
1	2.402 GHz						
2	2.426 GHz	Bluetooth Low Energy carrier					
3	2.48 GHz						
4	4.804 GHz	2nd harmonic Bluetooth Low Energy					
5	4.852 GHz						