Product Specification

Model：**FLC8720FRA-B**

Jiangsu Fulian Communication Technology Co., Ltd.

Approved By	Reviewed By	Prepared By	Version	Date
			V1.2	2025.04.30

1、 Version History

Date	Version	Updates
2024-12-20	V1.0	Initial Release
2025-03-05	V1.1	Add timing diagrams, reference designs, and power consumption data
2025-04-30	V1.2	Update module size

江苏富联

2、 Product Overview

The FLC8720FRA-B module integrates the RTL8720DF dual-core Cortex-M33 & M23 processor platform (up to 200MHz), supporting IEEE 802.11a/b/g/n Wi-Fi and Bluetooth Low Energy (BLE 5.0) across 2.4 GHz and 5 GHz bands. With built-in 512KB RAM and 4MB Flash, it delivers high-speed data processing capabilities.

Featuring an LGA package (13.2×12.5×2.0mm) and superior RF performance, it is widely used in IoT applications:

- Consumer IP cameras
- Dashcams
- Entry-level smart TVs
- Robotic vacuums
- Drones

3、 Key Features

- Dual-band support: 2.4GHz (802.11b/g/n) & 5GHz (802.11a/n)
- Compact dimensions: (13.2±0.2) x(12.5±0.2) x(2.0±0.15)mm
- LGA package design
- Power input: 3.0V–3.6V (Typ. 3.3V)
- Operating temperature: -40°C to +85°C
- 40MHz external crystal oscillator

4、 Technical Specifications

Parameter	Description
Model Number	FLC8720FRA-B
Module Type	Wi-Fi 1T1R and BT/BLE Combo Module
Main Chip	RTL8720DF
Stands	802.11 a/b/g/n，BLE 5.0
Data Rates	802.11b：1 Mbps、2 Mbps、5.5 Mbps、11 Mbps 802.11a/g：6 Mbps、9 Mbps、12 Mbps、18 Mbps、24 Mbps、36 Mbps、48 Mbps、54 Mbps 802.11n：HT20/HT40（MCS 0~MCS 7）
Modulation Schemes	DBPSK、DQPSK、CCK、BPSK、QPSK、16QAM、64QAM、GFSK
Frequency Bands	2.4 GHz：2.400~2.4835 GHz 5 GHz：5.150~5.850 GHz
Security	WPA-PSK、WPA2-PSK、WPA3-SAE、AES-128、DES、SHA、TrustZone、Secure Boot
Interface	SDIO\UART\USB\SPI\I2C\PWM
Power Supply	DC3.3V （3.0V - 3.6V）
Operation temp	-40~+85° C
Storage Temp	-20 ~ 95° C
Dimensions	（13.2±0.2）x（12.5±0.2）x(2.0±0.15)mm

5、 Hardware Architecture

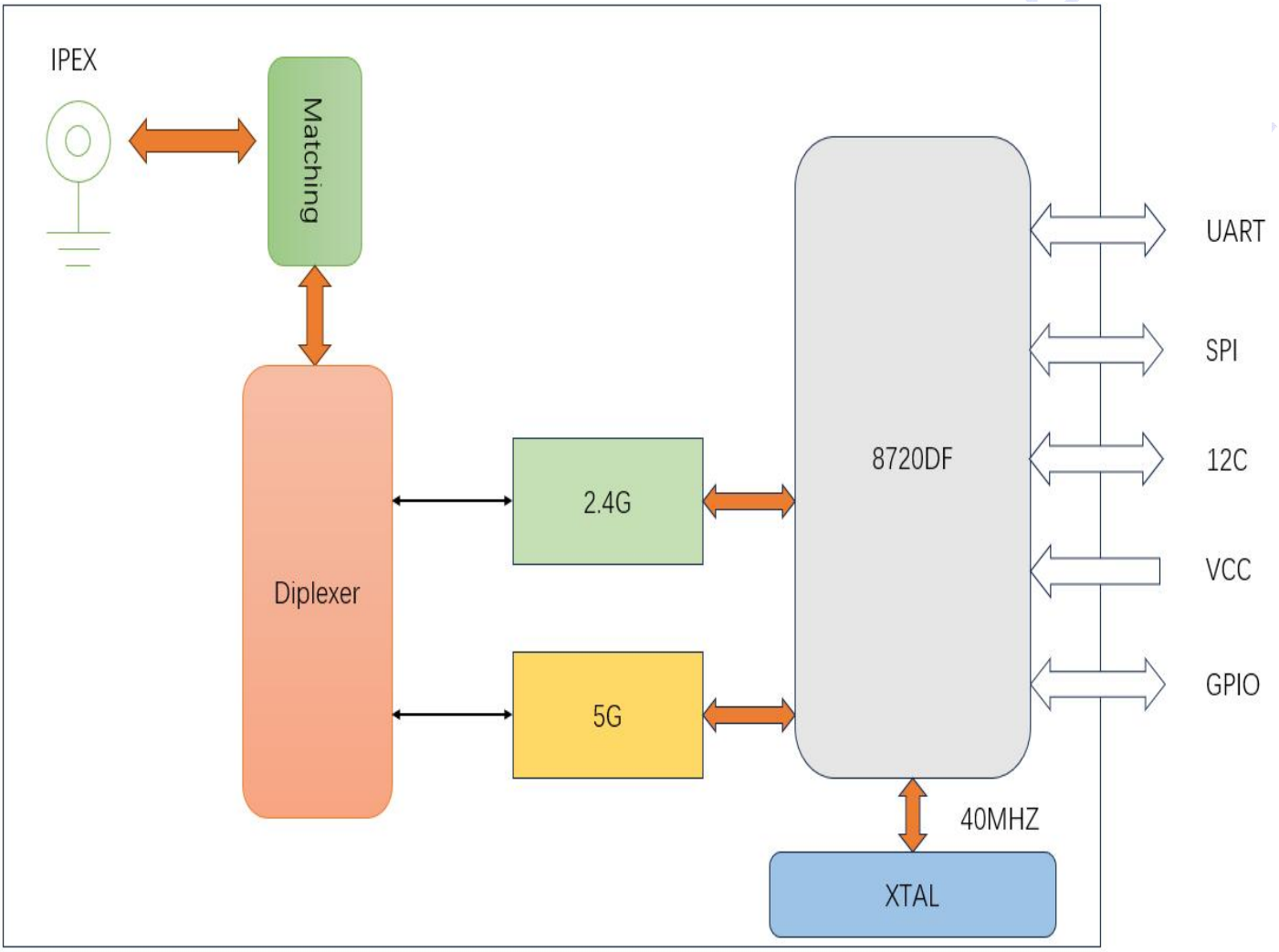

Figure 1 FLC8720FRA-B Block Diagram

6、 Hardware Architecture（（13.2±0.2）x（12.5±0.2）x(2.0±0.15)mm）

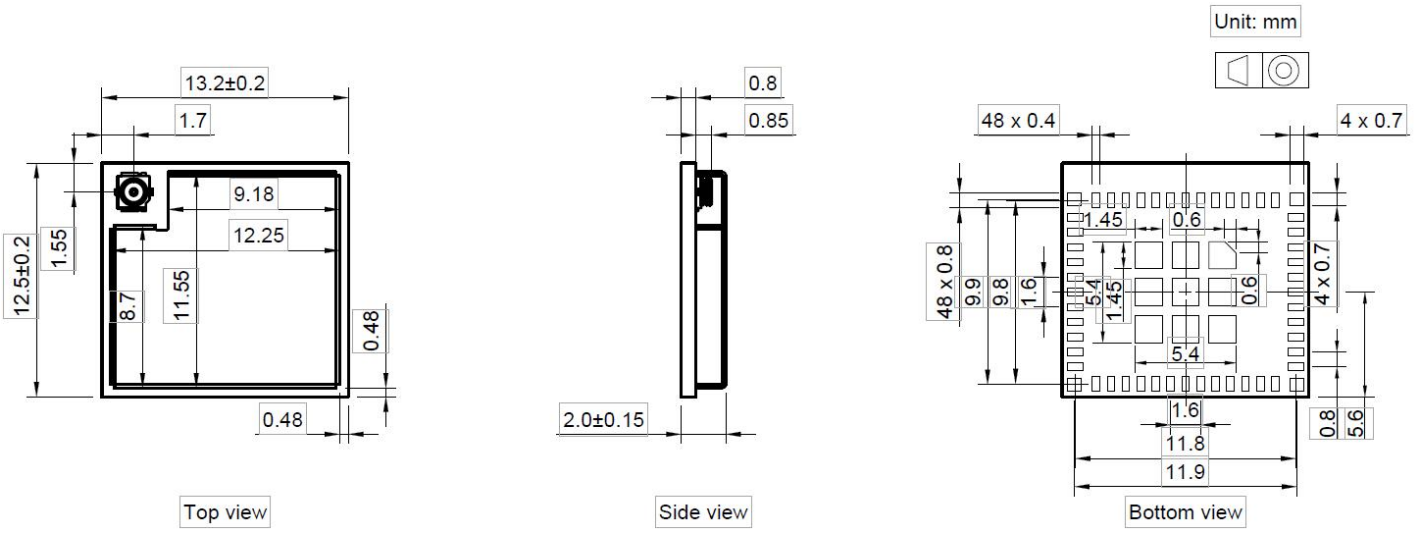

Figure 2. FLC8720FRA-B Physical Dimensions

7、 Pin Layout

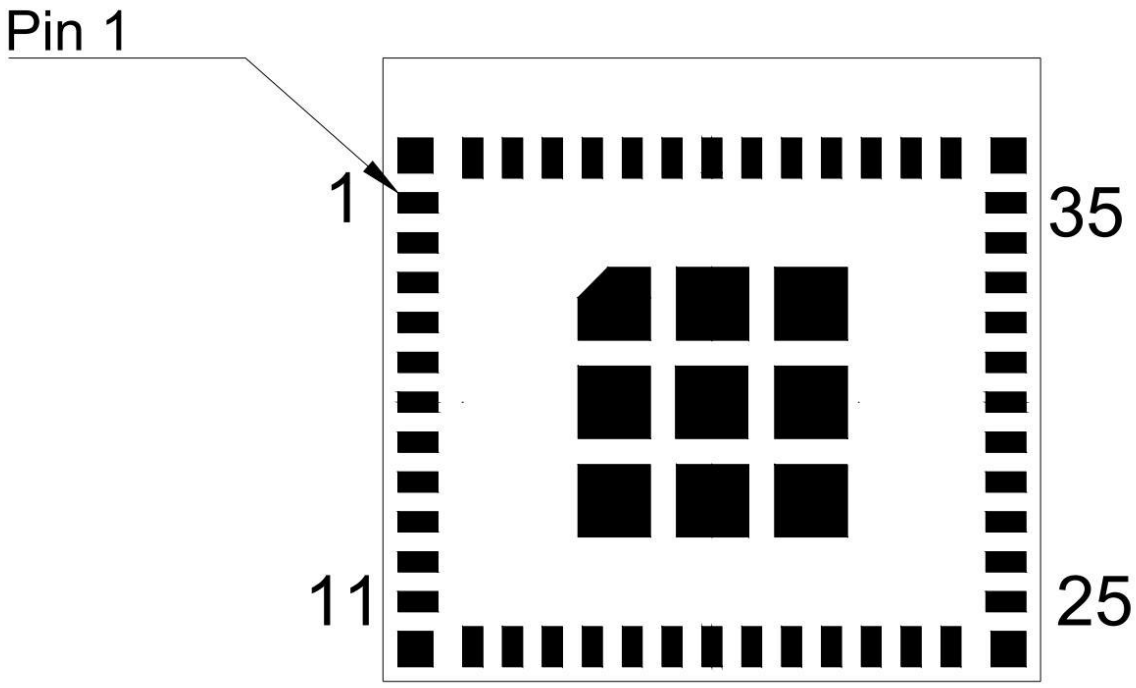

Pin Definition Top View

Table 1 Pin Definitions

No.	Name	Function	备注
1,2,11， 14,36~46,48~61	GND	GND	
3	VCC	Power:Vmax=3.6V Vmin=3.0V	
8	CHIP_EN	High：on, enable chip Low: off, chip power off	
31	UART1_TXD	UART1 TXD	UART
30	UART1_RXD	UART1 RXD	
19	UART2_TXD	UART2 TXD	
20	UART2_RXD	UART2 RXD	
5	GPIO10	GPIO	
6	GPIO9	GPIO	
12	GPIO15	GPIO	
13	GPIO14	GPIO	
16	GPIO3	GPIO	
17	GPIO2	GPIO	
18	GPIO1	GPIO	
21	GPIO0	GPIO	
22	GPIO6	GPIO	
23	GPIO8	GPIO	
26	GPIO7	GPIO	
27	GPIO5	GPIO	
28	GPIO4	GPIO	
33	GPIO16	GPIO	
34	GPIO17	GPIO	
35	GPIO11	GPIO	
47	ANT_WIFI/BT	WiFi/BLE Ant	50Ω
4,7,9,10,15,24,25,29,32	RESERVED	NC	suspended

GPIO Functions

引脚号	引脚名	GPIO	功能 1	功能 2	功能 3	功能 4
19	UART2_TXD	PA7	/	/	/	/
20	UART2_RXD	PA8	/	/	/	/
21	GPIO0	PA12	SPI_MOSI	/	/	/
18	GPIO1	PA13	SPI_MISO	/	/	/
17	GPIO2	PA14	SPI_CLK	/	/	/
16	GPIO3	PA15	SPI_CS	/	/	/
28	GPIO4	PA25	USB_DM	/	/	I2C1_SCL
27	GPIO5	PA26	USB_DP	/	/	I2C1_SDA
22	GPIO6	PA27	/		SWDIO1	/
26	GPIO7	PA28	RREF	/	/	/
23	GPIO8	PA30	/	/	/	/
6	GPIO9	PB1	ADC4	/	/	/
5	GPIO10	PB2	ADC5	/	/	/
35	GPIO11	PB3	ADC6	/	SWCLK1	/
30	UART1_RXD	PB18	/	SDIO_DATA2	SWCLK2	/
31	UART1_TXD	PB19	/	SDIO_DATA3	SWDIO2	/
13	GPIO14	PB20	/	SDIO_CMD	PWM0	I2C_SCL
12	GPIO15	PB21	/	SDIO_CLK	PWM1	I2C_SDA
33	GPIO16	PB22	/	SDIO_DATA0	PWM2	/
34	GPIO17	PB23	/	SDIO_DATA1	PWM3	/

8、 RF Performance

- BLE TX/RX Characteristics (VCC=3.3V 25℃)

Item	Metric	Condition	Value
TX	Output Power	BLE 1Mbps（dBm）	4.5
		BLE 2Mbps（dBm)	4.5
RX	Sensitivity	LE1M（dBm）	≤-100±3
		LE2M（dBm）	≤-96±3

- WiFi Specifications

	Protocol	Data Rate	Power（dBm）	EVM	Sensitivity (dBm)
2.4GHz	11b	1M	18	≤35%	-99
		11M	18	≤35%	-90
	11g	6Mbps	18	≤-5dB	-94
		54Mbps	17	≤-25dB	-77.5
	11n20	MCS0	18	≤-5dB	-94
		MCS7	16	≤-27dB	-75
5GHz	11a	6Mbps	16	≤-5dB	-94
		54Mbps	14	≤-25dB	-76.5
	11n20	MCS0	16	≤-5dB	-94
		MCS7	13	≤-27dB	-74.5

9、Reference Design

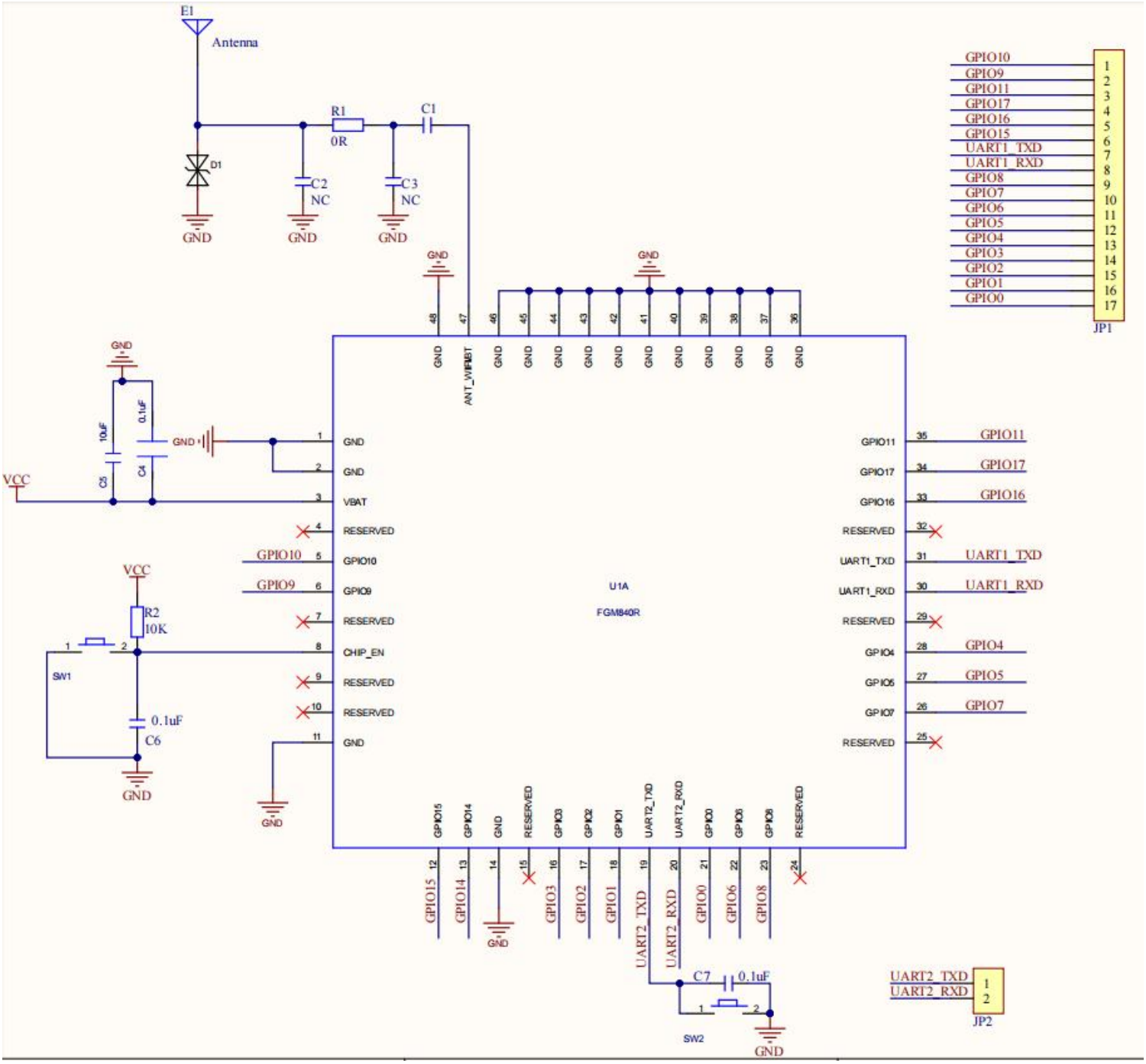

Description:

- UART2 interface can be used as debug UART with debugging tools for downloading, debugging and AT command communication. It supports debugging command input of chip manufacturers and some AT command applications, and supports log printing output. TVS devices can be connected to improve the anti-static ability of the system.
- Reset: CHIP_EN pin is pulled low (<0.2*VCC) for at least 1ms
- Download mode: After the module is powered on, it is necessary to pull down the CHIP_EN and

UART2_TXD pins for at least 1ms, and then release the CHIP_EN and UART2_TXD pins in turn. The module will enter the download mode and download the firmware through the debug UART

10、Timing diagram

Symbol	Parameter	Min.	Typ.	Max.	Unit
T_{PRDY}	VDD*x* ready time	0.1	0.6	4.6	ms
T_{CORE}	HS core power ready time		15	-	ms
T_{BOOT}	HS MCU boot time	200	200	-	ms
V_{PD_LOW}	Power-down low voltage	0	0	0.3	V
V_{RST}	Shutdown occurs after CHIP_EN lower than this voltage	0	0	0.2 * VDD*x*	V
T_{RST}	Required time that CHIP_EN lower than V_{RST}	1	1	-	ms

A、Power on or deep sleep wake-up timing

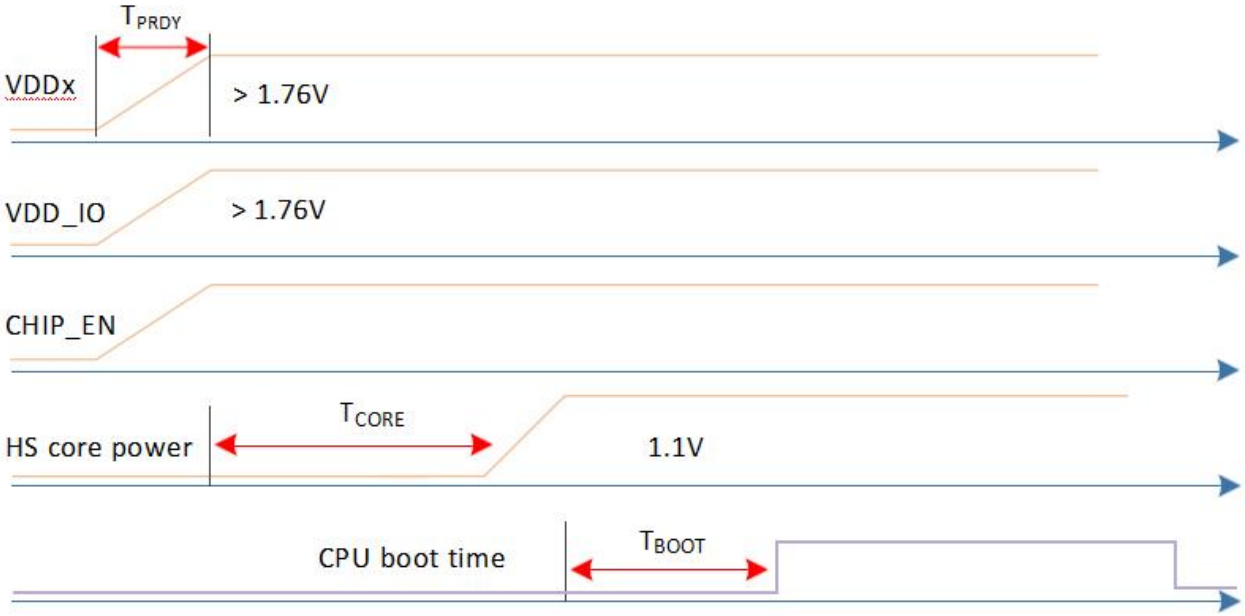

B、Power off timing

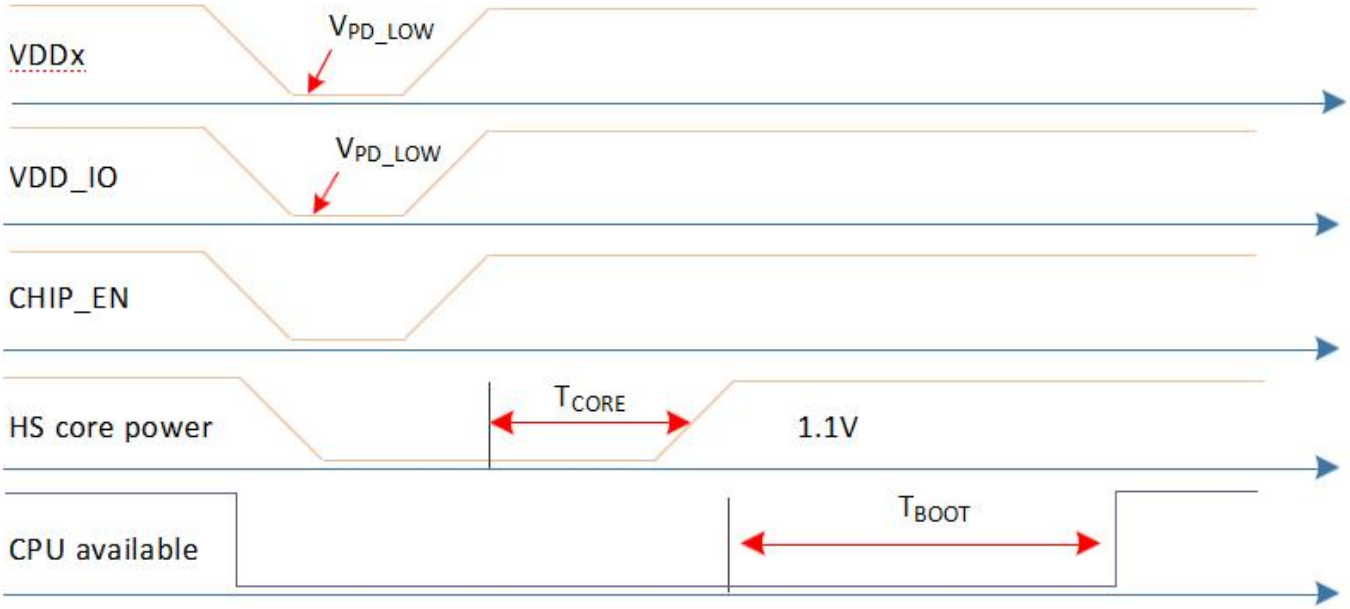

C、Power down timing

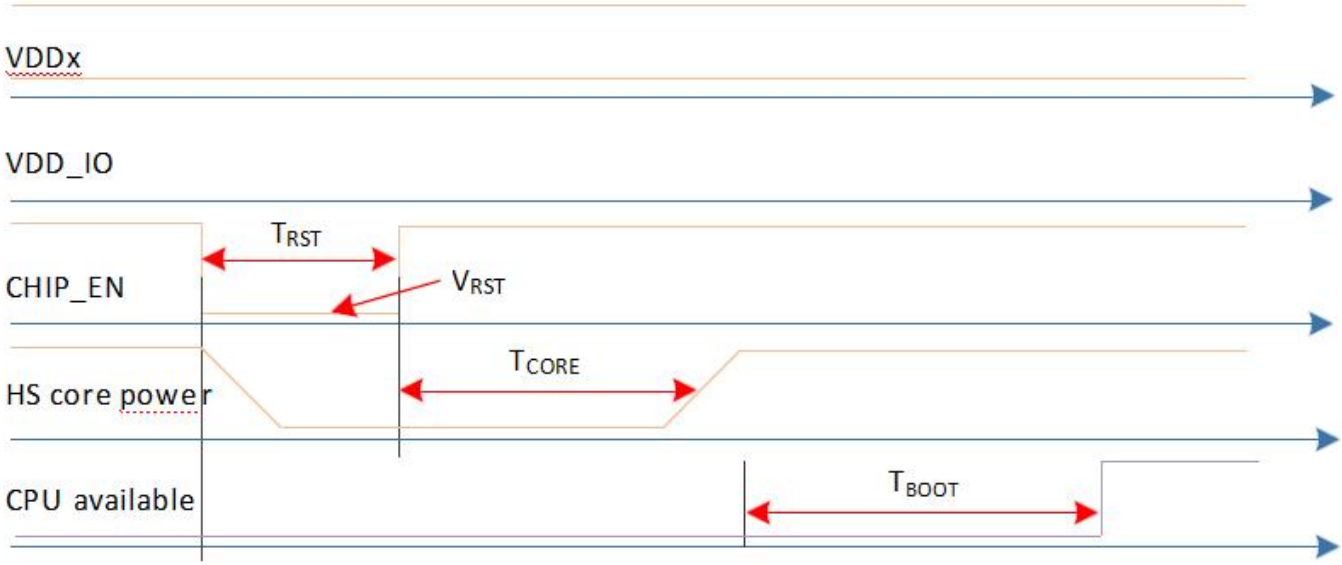

11、Power consumption data

Power consumption				
Mode		Rate	Power (dBm)	Current(mA)
2.4GHz	802.11b	TX-1Mbps	18	281
		TX-11Mbps	18	268
	802.11g	TX-6M	18	274
		TX-54M	17	198
	802.11n	TX-MCS0	18	271
		TX-MCS7	16	187
5G	802.11a	TX-6M	16	285
		TX-54M	14	203
	802.11n	TX-MCS0	16	286
		TX-MCS7	13	192
BT	BLE	TX-1Mbps	4.5	86
		TX-2Mbps	4.5	63

12、Reflow Profile

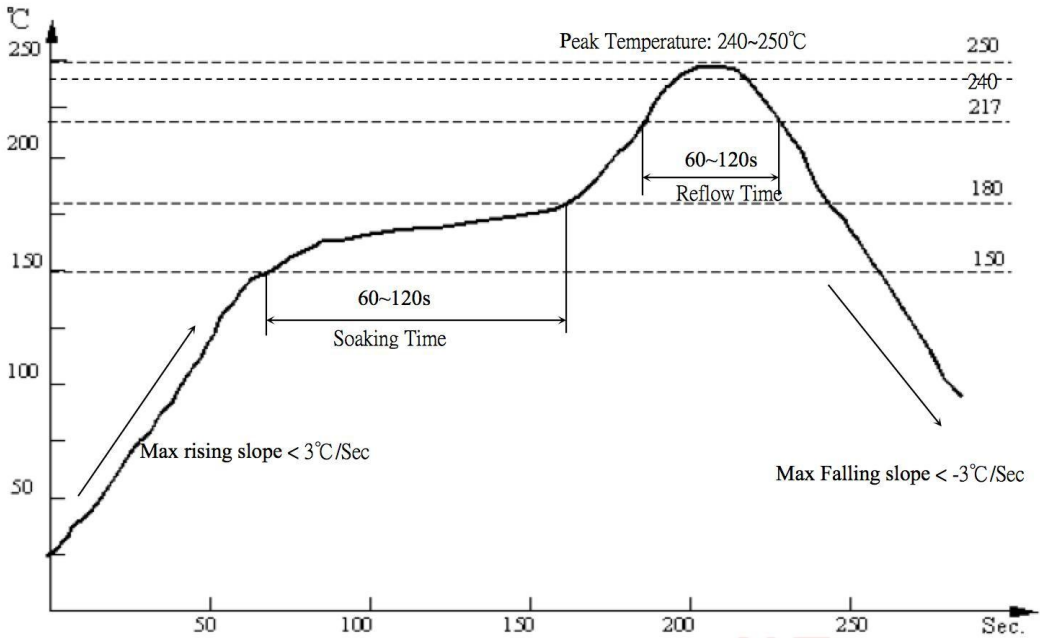

Figure 3.FLC8720FRA-B Reflow Temperature

13、Antenna

- Manufacturer name:Hongji Wireless Communication(Shenzhen) Co.,Ltd
- Product P/N:FLA2A5
- Product type:External Flat Antenna
- Description:2.4/5.8G External Black Flat Antenna 1.13 Black Wire IPEX-4 Generation

Specification Table：

Main technical specifications	
Frequency Range (MHZ)	2400~2500/5150~5850
Impedance(Ω)	50
Peak Gain(dBi)	2/3
VSWR	≤2.0
Max Power	10W
Polarization	Line Polarization
Radiation Direction	360º
Physical Properties	
Antenna size(mm)	¢ 21.6*156
Antenna cover material	ABS
Connector Type	IPEX-4
Operating Temp	-30℃ ~+85℃
Storage Temp	-30℃ ~+85℃

Product Drawing

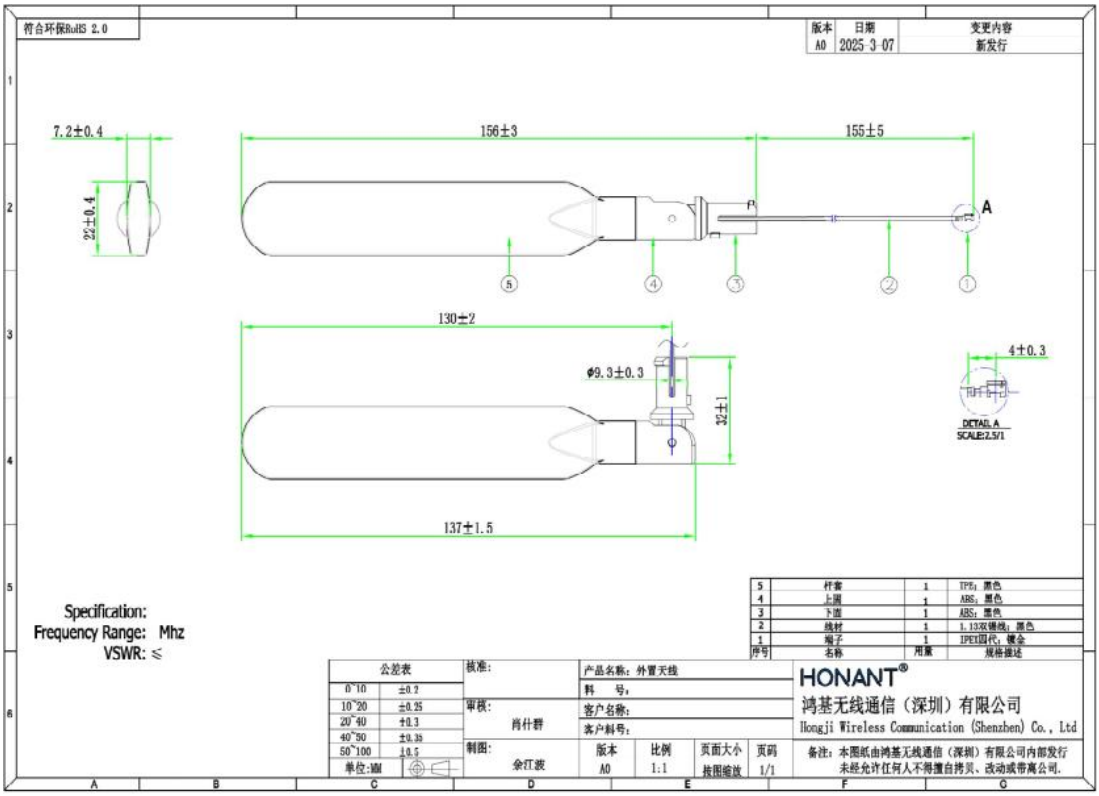

Test data

Frequency（ MHZ）	Gain（ dBi）	Efficiency（ %）
2400	2.14	70.3
2450	2.63	67.3
2500	2.81	66.3
5150	3.67	65.4
5350	3.12	63.2
5750	3.23	64.8
5850	3.15	63

14、 Packaging & Storage

Tape-and-reel packaging with desiccant and humidity indicator.

Storage:

Sealed: 12 months at ≤40°C/90% RH

Post-opening: Mount within 168 hrs (≤30°C/60% RH)

Figure 4. FLC8720FRA-B Packing

ESD Protection: Mandatory during handling

Figure 5. FLC8720FRA-B storage and ESD protection

Support & Contact

Jiangsu Fulian Communication Technology Co., Ltd.
Address: Fulian Industrial Park, Lanling Road, Danyang Economic Zone, Jiangsu 212310, China
Tel: +86-511-80760088
Email: sales@fulian-link.com
Business Hours: Mon–Sat 8:00–12:00 & 13:00–17:00 (GMT+8)

FCC Statement

FCC standards: FCC CFR Title 47 Part 15 Subpart C Section 15.247
PCB antenna with antenna gain 3.67dBi
This device complies with part 15 of the FCC Rules. Operation is subject to the following two conditions: (1) This device may not cause harmful interference, and (2) this device must accept any interference received, including interference that may cause undesired operation.
Any Changes or modifications not expressly approved by the party responsible for compliance could void the user's authority to operate the equipment.
Note: This equipment has been tested and found to comply with the limits for a Class B digital device, pursuant to part 15 of the FCC Rules. These limits are designed to provide reasonable protection against harmful interference in a residential installation. This equipment generates, uses and can radiate radio frequency energy and, if not installed and used in accordance with the instructions, may cause harmful interference to radio communications. However, there is no guarantee that interference will not occur in a particular installation. If this equipment does cause harmful interference to radio or television reception, which can be determined by turning the equipment off and on, the user is encouraged to try to correct the interference by one or more of the following measures:
—Reorient or relocate the receiving antenna.
—Increase the separation between the equipment and receiver.
—Connect the equipment into an outlet on a circuit different from that to which the receiver is connected.
—Consult the dealer or an experienced radio/TV technician for help.
FCC Radiation Exposure Statement
This modular complies with FCC RF radiation exposure limits set forth for an uncontrolled environment. This transmitter must not be co-located or operating in conjunction with any other antenna or transmitter.
If the FCC identification number is not visible when the module is installed inside another device, then the outside of the device into which the module is installed must also display a label referring to the enclosed module. This exterior label can use wording such as the following: “Contains Transmitter Module FCC ID: 2AXS5-FLC8720FRA-B Or Contains FCC ID: 2AXS5-FLC8720FRA-B”
When the module is installed inside another device, the user manual of the host must contain below warning statements;
1. This device complies with Part 15 of the FCC Rules. Operation is subject to the following two conditions:
(1) This device may not cause harmful interference.
(2) This device must accept any interference received, including interference that may cause undesired operation.
Note: This equipment has been tested and found to comply with the limits for a Class B digital device, pursuant to part 15 of the FCC Rules. These limits are designed to provide reasonable protection against harmful interference in a residential installation. This equipment generates, uses and can radiate radio frequency energy and, if not installed and used in accordance with the instructions, may cause harmful interference to radio communications.
However, there is no guarantee that interference will not occur in a particular installation. If this equipment does cause harmful interference to radio or television reception, which can be determined by turning the equipment off and on, the user is encouraged to try to correct the interference by one or more of the following measures:
—Reorient or relocate the receiving antenna.
—Increase the separation between the equipment and receiver.
—Connect the equipment into an outlet on a circuit different from that to which the receiver is connected.
—Consult the dealer or an experienced radio/TV technician for help.

2. Changes or modifications not expressly approved by the party responsible for compliance could void the user's authority to operate the equipment.

The devices must be installed and used in strict accordance with the manufacturer's instructions as described in the user documentation that comes with the product.

Any company of the host device which install this modular with limit modular approval should perform the test of radiated & conducted emission and spurious emission,etc. according to FCC part 15C : 15.247 and 15.209 & 15.207 ,15B Class B requirement, Only if the test result comply with FCC part 15C : 15.247 and 15.209 & 15.207 ,15B Class B requirement，then the host can be sold legally.