TEST REPORT

Product Name : Remote Control Musical Projection Lamp
Model Number : RCPL-001
FCC ID : 2AXSGRCPL-001

Prepared for : shenzhenshikangqiankejiyouxiangongsi
Address : baoanquhangchengjiedaozhongwushequzhongwuxinqubei yiquerxiang4401, Shenzhen, China

Prepared by : EMTEK (SHENZHEN) CO., LTD.
Address : Building 69, Majialong Industry Zone, Nanshan District, Shenzhen, Guangdong, China

Tel: (0755) 26954280
Fax: (0755) 26954282

Report Number : ENS2202140145W00101R
Date(s) of Tests : February 14, 2022 to February 18, 2022
Date of issue : February 18, 2022

TABLE OF CONTENT

Test Report Description **Page**

1. SUMMARY OF TEST RESULTS 5

2. GENERAL INFORMATION 6

2.1. Description of Device (EUT) 6
2.2. Input / Output Ports 7
2.3. Independent Operation Modes 8
2.4. Test Manner 8
2.5. Test Software 8
2.6. Description of Test Facility 9
2.7. Measurement Uncertainty 9

3. MEASURING DEVICE AND TEST EQUIPMENT 10

3.1. For Power Line Conducted Emission Measurement 10
3.2. For Radiated Emission Measurement 10

4. POWER LINE CONDUCTED EMISSION MEASUREMENT 11

4.1. Block Diagram of Test Setup 11
4.2. Limits 11
4.3. Test Procedure 11
4.4. Measuring Results 12

5. RADIATED EMISSION MEASUREMENT (UP TO 1GHz) 15

5.1. Block Diagram of Test Setup 15
5.2. Radiated Limit 15
5.3. Test Procedure 15
5.4. Measuring Results 16

6. RADIATED EMISSION MEASUREMENT (ABOVE 1GHz) 19

6.1. Block Diagram of Test Setup 19
6.2. Radiated Limit 19
6.3. Test Procedure 19
6.4. Measuring Results 20

7. PHOTOGRAPHS 23

7.1. Photos of Conducted Emission Measurement 23
7.2. Photos of Radiation Emission Measurement 24

APPENDIX A: Warning Labels
APPENDIX B: Warning Statement
APPENDIX C: Photos of EUT

TEST REPORT DESCRIPTION

Applicant	:	shenzhenshikangqiankejiyouxiangongsi
Address	:	baoanquhangchengjiedaozhongwushequzhongwuxinqubeiyiquerxiang4401, Shenzhen, China
Manufacturer	:	shenzhenshikangqiankejiyouxiangongsi
Address	:	baoanquhangchengjiedaozhongwushequzhongwuxinqubeiyiquerxiang4401, Shenzhen, China
Trade Mark	:	Moredig
EUT	:	Remote Control Musical Projection Lamp
Model Number	:	RCPL-001

Measurement Procedure Used:

FCC CFR Title 47, Part 15, Subpart B, Class B
ANSI C63.4-2014

The device described above is tested by EMTEK (SHENZHEN) CO., LTD. to determine the maximum emission levels emanating from the device and the severe levels of the device can endure and its performance criterion. The measurement results are contained in this test report and EMTEK (SHENZHEN) CO., LTD. is assumed full of responsibility for the accuracy and completeness of these measurements. Also, this report shows that the EUT (Equipment under Test) is technically compliant with the FCC requirements.

This report applies to above tested sample only and shall not be reproduced in part without written approval of EMTEK (SHENZHEN) CO., LTD.

Date of Test :	February 14, 2022 to February 18, 2022
Prepared by :	Luo peiye/Editor
Reviewer :	Joe Xia/Supervisor
Approve & Authorized Signer :	Lisa Wang/Manager

Modified Information

Version	Report No.	Revision Data	Summary
Ver.1.0	ENS2202140145W00101R	/	Original Version

1. SUMMARY OF TEST RESULTS

EMISSION		
Description of Test Item	Standard & Limits	Results
Conducted Disturbance at Mains Terminals	FCC Part 15, Subpart B- Section 15.107, Class B ANSI C63.4-2014	Pass
Radiated Disturbance	FCC Part 15, Subpart B- Section 15.109, Class B ANSI C63.4-2014	Pass
Note: N/A is an abbreviation for Not Applicable.		

2. GENERAL INFORMATION

2.1. Description of Device (EUT)

EUT	:	Remote Control Musical Projection Lamp
Model Number	:	RCPL-001
Power supply	:	USB 5V (5V from adapter) (5V from PC)
Test Voltage	:	AC 120V/60Hz(DC 5V from adapter)
Sample Number	:	1#
Applicant	:	shenzhenshikangqiankejiyouxiangongsi
Address	:	baoanquhangchengjiedaozhongwushequzhongwuxinqubeiyiquerxiang4 401, Shenzhen, China
Manufacturer	:	shenzhenshikangqiankejiyouxiangongsi
Address	:	baoanquhangchengjiedaozhongwushequzhongwuxinqubeiyiquerxiang4 401, Shenzhen, China
Date of Received	:	February 14, 2022
Date of Test	:	February 14, 2022 to February 18, 2022

2.2. Input / Output Ports

EUT Cable List and Details			
Cable Description	Length (m)	Shielded/Unshielded	With / Without Ferrite
/	/	/	/

Auxiliary Cable List and Details			
Cable Description	Length (m)	Shielded/Unshielded	With / Without Ferrite
/	/	/	/

Auxiliary Equipment List and Details			
Description	Manufacturer	Model	Serial Number
Adapter	Sunun	SA69-050200V	A69C-03

Notes:

1) All the equipment/cables were placed in the worst-case configuration to maximize the emission during the test.
2) Grounding was established in accordance with the manufacturer's requirements and conditions for the intended use.

2.3. Independent Operation Modes

A. On

1. Working mode(Light+Rotation+Play Music)

2.4. Test Manner

Test Items	Test Voltage	Operation Modes	Worst case
Conducted Emission	DC 5V from adapter (AC 120V/60Hz)	Mode A	Mode A. (AC 120V/60Hz)
Radiated Emission	DC 5V from adapter (AC 120V/60Hz)	Mode A	Mode A. (AC 120V/60Hz)

2.5. Test Software

Item		Software
Conducted Emission	:	EMTEK(Ver.CON-03A1)-Shenzhen
Radiated Emission	:	EMTEK(Ver.RA-03A1)-Shenzhen

2.6. Description of Test Facility

Site Description		
EMC Lab.	:	**Accredited by CNAS** The Certificate Registration Number is L2291. The Laboratory has been assessed and proved to be in compliance with CNAS-CL01 (identical to ISO/IEC 17025:2017) **Accredited by FCC** Designation Number: CN1204 Test Firm Registration Number: 882943 **Accredited by A2LA** The Certificate Number is 4321.01. **Accredited by Industry Canada** The Conformity Assessment Body Identifier is CN0008
Name of Firm	:	EMTEK (SHENZHEN) CO., LTD.
Site Location	:	Building 69, Majialong Industry Zone, Nanshan District, Shenzhen, Guangdong, China

2.7. Measurement Uncertainty

Test Item		Uncertainty
Conducted Emission Uncertainty	:	3.16dB(9k~150kHz Conduction 2#) 2.90dB(150k-30MHz Conduction 2#)
Radiated Emission Uncertainty (3m Chamber)	:	3.78dB (30M~1GHz Polarize: H) 4.27dB (30M~1GHz Polarize: V) 4.46dB (1~6GHz)
Uncertainty for test site temperature and humidity	:	0.6℃ 4%

3. MEASURING DEVICE AND TEST EQUIPMENT

3.1. For Power Line Conducted Emission Measurement

Equipment	Manufacturer	Model No.	Serial No.	Last Cal.	Cal. Interval
EMI Test Receiver	Rohde & Schwarz	ESCI	101384	2021/5/15	1Year
AMN	Rohde & Schwarz	ENV216	5	2021/5/15	1Year
AMN	Kyoritsu	KNW-407	8-1492-9	2021/5/16	1Year
EMI Test Receiver	Rohde & Schwarz	ESCI	101045	2021/5/15	1Year
PULSE LIMTER	Rohde & Schwarz	ESH3-Z2	100107	2021/5/15	1Year
AMN	Rohde & Schwarz	ESH3-Z5	100191	2021/5/15	1Year

3.2. For Radiated Emission Measurement

Equipment	Manufacturer	Model No.	Serial No.	Last Cal.	Cal. Interval
Pre-Amplifier	HP	8447F	2944A07999	2021/5/15	1Year
Pre-Amplifier	HP	8447F	2944A07999	2021/5/15	1Year
EMI Test Receiver	Rohde & Schwarz	ESCI	101414	2021/5/15	1Year
Bilog Antenna	Schwarzbeck	VULB9163	712	2021/7/5	2 Year
Horn antenna	Schwarzbeck	BBHA9120D	9120D-1178	2020/7/4	2 Year
Pre-Amplifie	Lunar EM	LNA1G18-48	J1011131010001	2021/5/15	1Year
Spectrum Analyzer	Rohde & Schwarz	FSV40	100967	2021/5/15	1Year
Horn antenna	Schwarzbeck	BBHA9170	9170-399	2021/6/12	2 Year

4. POWER LINE CONDUCTED EMISSION MEASUREMENT

4.1. Block Diagram of Test Setup

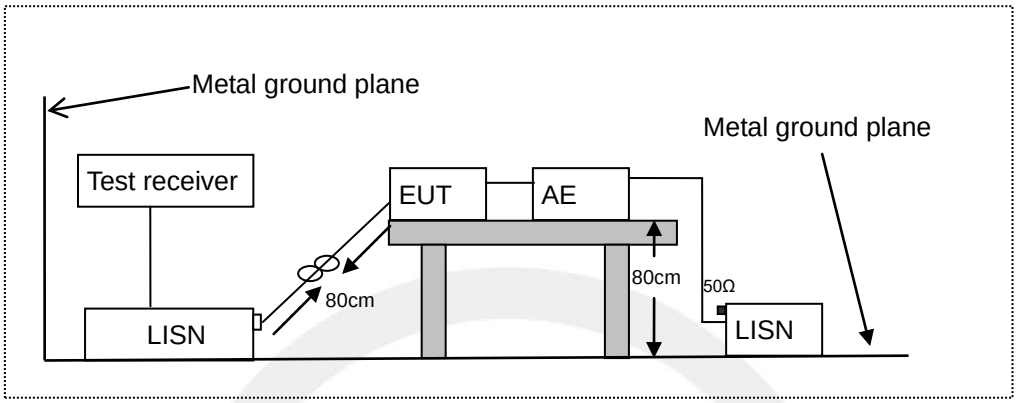

LISN: Line Impedance Stabilization Network
AE: Associated equipment
EUT: Equipment under test

4.2. Limits

FCC Part 15, Subpart B, Class B

Frequency (MHz)			Limit (dBμV)	
			Quasi-peak Level	Average Level
0.15	~	0.50	66.0 ~ 56.0 *	56.0 ~ 46.0 *
0.50	~	5.00	56.0	46.0
5.00	~	30.00	60.0	50.0
NOTE1-The lower limit shall apply at the transition frequencies. NOTE2-The limit decreases linearly with the logarithm of the frequency in the range 0.15MHz to 0.50MHz.				

4.3. Test Procedure

The EUT was placed on a desk 0.8 m height from the metal ground plane and 0.4 m from the conducting wall of the shielding room and it was kept at least 0.8 m from any other grounded conducting surface. The size of the table will nominally be 1.5 m x1.0 m.

The rear of the arrangement shall be flush with the back of the supporting tabletop unless that would not be possible or typical of normal use.

All units of equipment forming the system under test (includes the EUT as well as connected peripherals and associated equipment or devices) shall be arranged such that a nominal 0.1 m separation is achieved between the neighboring units.

Connect EUT to the power mains through a line impedance stabilization network (LISN). Where the mains cable supplied by the manufacturer is longer than 1 m, the excess should be folded at the

centre into a bundle no longer than 0.4 m, so that its length is shortened to 1 m.

All the support units are connecting to the other LISN.

The LISN provides 50 ohm coupling impedance for the measuring instrument.

Both sides of AC line were checked for maximum conducted interference.

The frequency range from 150 kHz to 30 MHz was sweep.

Set the test-receiver system to quasi peak detect function and average detect function, and to measure the conducted emissions values.

Test results were obtained from the following equation:
Emission Level (dBμV) = LISN Factor (dB) + Cable Loss (dB) + Reading (dBμV)
Margin (dB) = Emission Level (dBμV) - Limit (dBμV)

4.4. Measuring Results

Pass

Temperature	:	22.4°C
Humidity	:	57%
Atmospheric Pressure	:	101kpa
Test Engineer	:	YJ
Test Date	:	2022-2-18

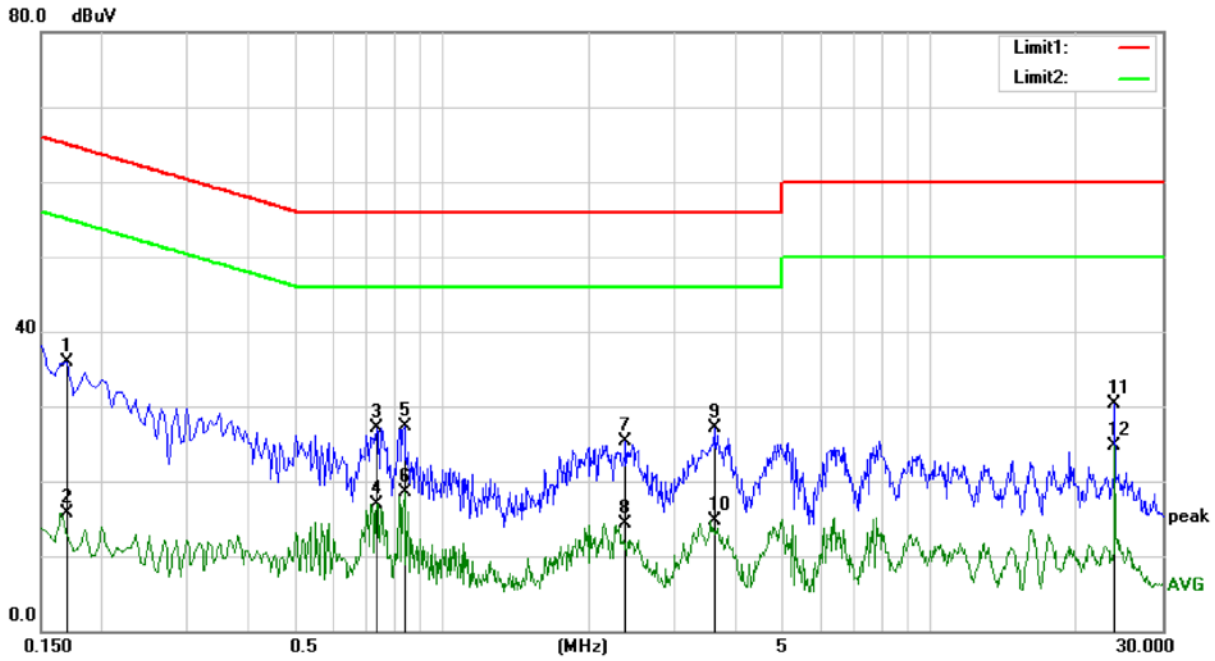

Site Conduction #1 Phase: *L1* Temperature: 22.4

Limit: (CE)FCC PART 15 class B_QP Power: AC 120V/60Hz Humidity: 57 %

Mode: Light+Rotation+Play musin mode

Note:

No.	Mk.	Freq.	Reading Level	Correct Factor	Measure-ment	Limit	Over		
		MHz	dBuV	dB	dBuV	dBuV	dB	Detector	Comment
1		0.1700	26.33	9.52	35.85	64.96	-29.11	QP	
2		0.1700	6.10	9.52	15.62	54.96	-39.34	AVG	
3		0.7350	17.85	9.35	27.20	56.00	-28.80	QP	
4		0.7350	7.65	9.35	17.00	46.00	-29.00	AVG	
5		0.8350	17.67	9.55	27.22	56.00	-28.78	QP	
6		0.8350	8.99	9.55	18.54	46.00	-27.46	AVG	
7		2.3800	15.43	9.94	25.37	56.00	-30.63	QP	
8		2.3800	4.35	9.94	14.29	46.00	-31.71	AVG	
9		3.6150	17.09	9.93	27.02	56.00	-28.98	QP	
10		3.6150	4.82	9.93	14.75	46.00	-31.25	AVG	
11		23.9300	20.02	10.20	30.22	60.00	-29.78	QP	
12	*	23.9300	14.48	10.20	24.68	50.00	-25.32	AVG	

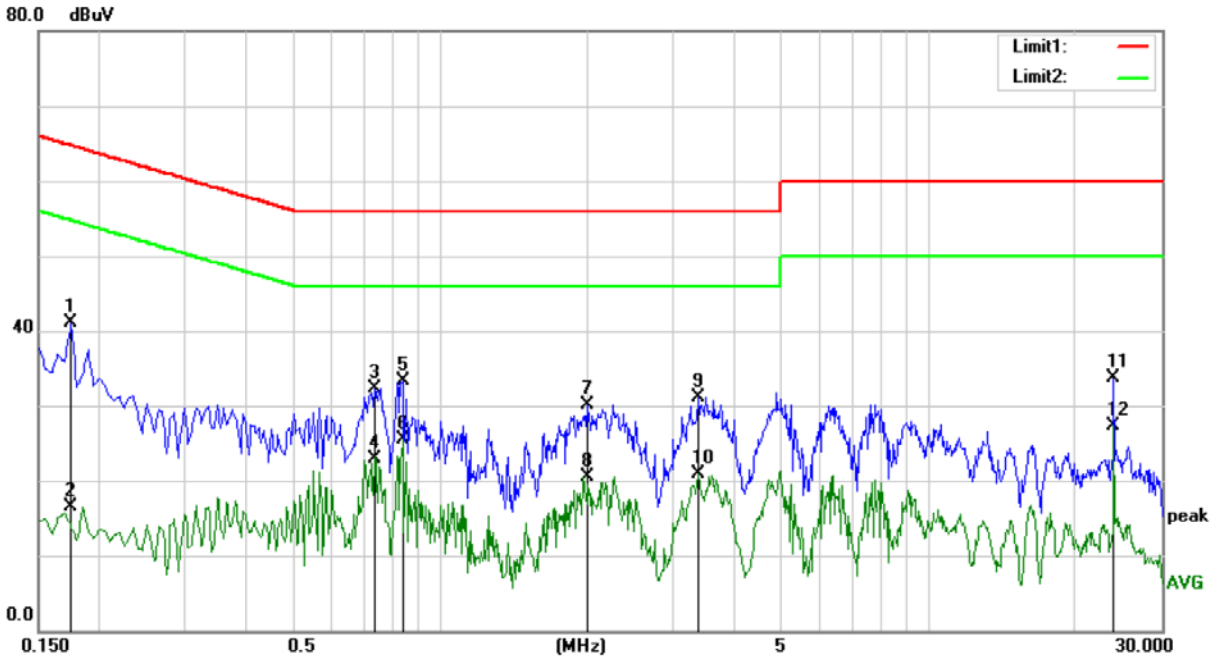

Site Conduction #1 Phase: N Temperature: 22.4

Limit: (CE)FCC PART 15 class B_QP Power: AC 120V/60Hz Humidity: 57 %

Mode: Light+Rotation+Play musin mode

Note:

No.	Mk.	Freq.	Reading Level	Correct Factor	Measure-ment	Limit	Over		
		MHz	dBuV	dB	dBuV	dBuV	dB	Detector	Comment
1		0.1750	31.69	9.50	41.19	64.72	-23.53	QP	
2		0.1750	6.91	9.50	16.41	54.72	-38.31	AVG	
3		0.7350	22.96	9.35	32.31	56.00	-23.69	QP	
4		0.7350	13.65	9.35	23.00	46.00	-23.00	AVG	
5		0.8350	23.75	9.55	33.30	56.00	-22.70	QP	
6	*	0.8350	15.93	9.55	25.48	46.00	-20.52	AVG	
7		2.0000	20.22	9.94	30.16	56.00	-25.84	QP	
8		2.0000	10.53	9.94	20.47	46.00	-25.53	AVG	
9		3.3800	21.11	9.94	31.05	56.00	-24.95	QP	
10		3.3800	11.02	9.94	20.96	46.00	-25.04	AVG	
11		23.9300	23.44	10.20	33.64	60.00	-26.36	QP	
12		23.9300	17.05	10.20	27.25	50.00	-22.75	AVG	

5. RADIATED EMISSION MEASUREMENT (UP TO 1GHz)

5.1. Block Diagram of Test Setup

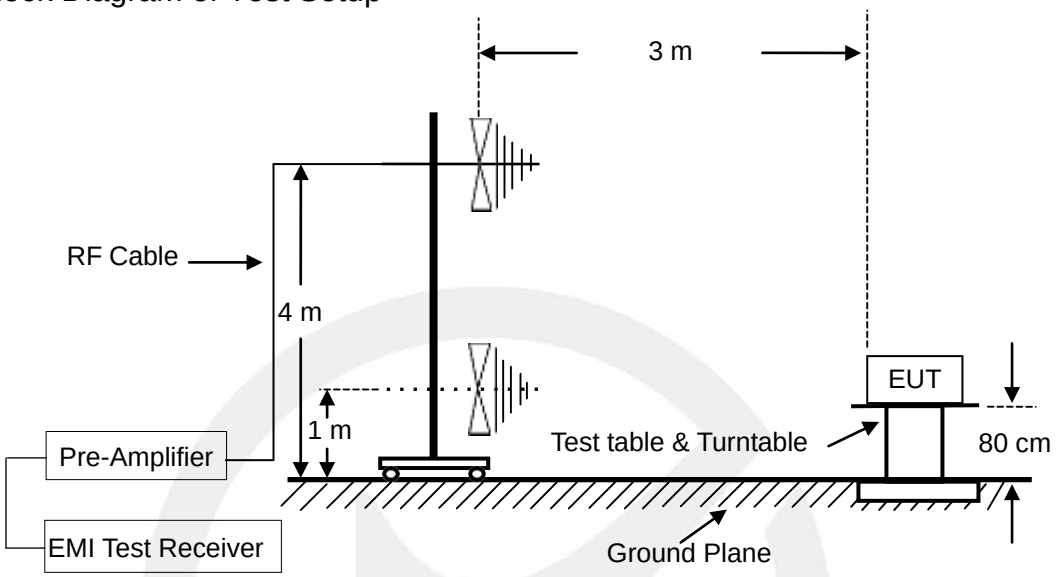

5.2. Radiated Limit

FCC Part 15, Subpart B, Class B

Frequency MHz	Distance Meters	Field Strengths Limit	
		μV/m	dB(μV)/m
30 ~ 88	3	100	40.0
88 ~ 216	3	150	43.5
216 ~ 960	3	200	46.0
960 ~ 1000	3	500	54.0

5.3. Test Procedure

The EUT was placed on a non-conductive table whose total height equaled 80cm. All units of equipment forming the system under test (includes the EUT as well as connected peripherals and associated equipment or devices) shall be arranged such that a nominal 0.1 m separation is achieved between the neighboring units. Where the mains cable supplied by the manufacturer is longer than 1 m, the excess should be folded at the center into a bundle no longer than 0.4 m, so that its length is shortened to 1 m.

The EUT was set 3 meters away from the receiving antenna that was mounted on a non-conductive mast. The antenna can move up and down between 1 to 4 meters to find out the maximum emission level.

The turntable can rotate 360 degree to determine the position of the maximum emission level.

The initial testing identified the frequency that has the highest disturbance relative to the limit while operating the EUT in typical modes of operation and cable positions in a test setup representative of

typical system configuration.

The identification of the frequency of highest emission with respect to the limit was found by investigating emissions at a number of significant frequencies. The probable frequency of maximum emission had been found and that the associated cable and EUT configuration and mode of operation had been identified.

The bandwidth of the Receiver is set at 120 kHz.

Test results were obtained from the following equation:
Emission level (dBμV/m) = Antenna Factor -Amp Factor +Cable Loss + Reading
Margin (dB) = Emission Level (dBμV/m) - Limit (dBμV/m)

5.4. Measuring Results

PASS.

Temperature	:	22°C
Humidity	:	43%
Atmospheric Pressure	:	101kpa
Test Engineer	:	LEEY
Test Date	:	2022-2-16

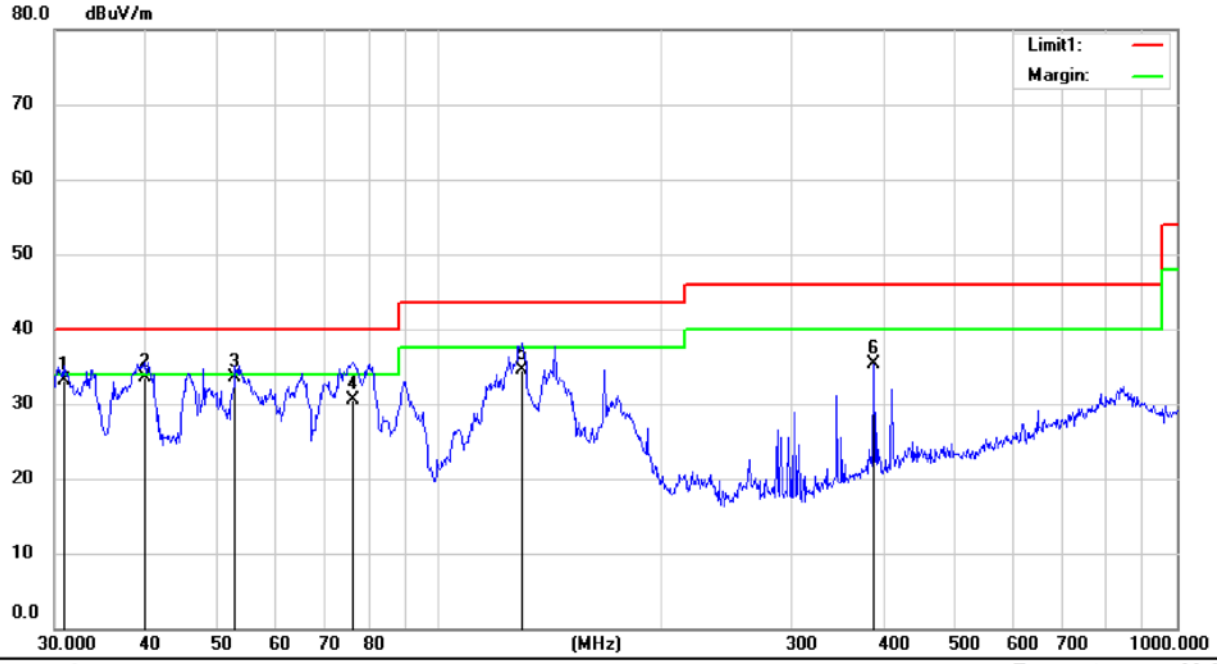

Site 3m Chamber #1 Polarization: ***Vertical*** Temperature: 22 C

Limit: (RE)FCC PART 15 CLASS B Power: AC 120V/60Hz Humidity: 43 %

Mode: Light+Rotation+Play music mode

Note:

No.	Mk.	Freq.	Reading Level	Correct Factor	Measure-ment	Limit	Over		Antenna Height	Table Degree	
		MHz	dBuV	dB	dBuV/m	dBuV/m	dB	Detector	cm	degree	Comment
1		30.8805	47.63	-14.53	33.10	40.00	-6.90	QP			
2	*	39.7670	46.54	-12.94	33.60	40.00	-6.40	QP			
3		52.7600	45.45	-11.85	33.60	40.00	-6.40	QP			
4		76.2442	44.97	-14.37	30.60	40.00	-9.40	QP			
5		129.5244	48.86	-14.26	34.60	43.50	-8.90	QP			
6		388.8432	42.10	-6.79	35.31	46.00	-10.69	QP			

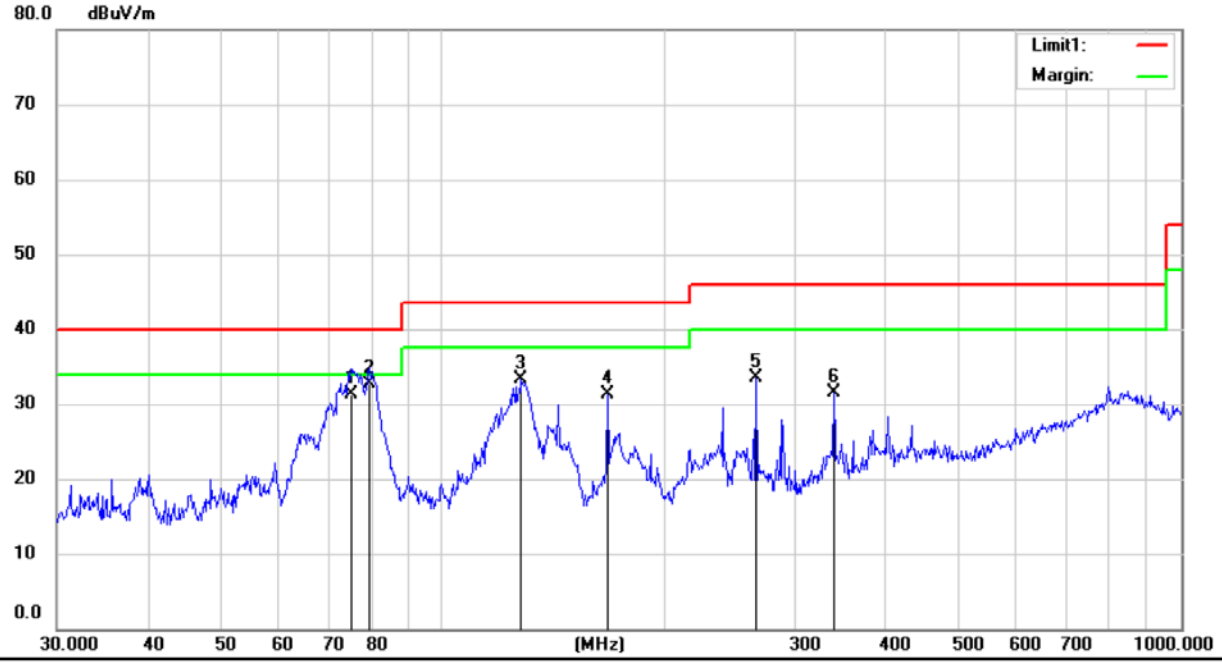

Site 3m Chamber #1 Polarization: ***Horizontal*** Temperature: 22 C

Limit: (RE)FCC PART 15 CLASS B Power: AC 120V/60Hz Humidity: 43 %

Mode: Light+Rotation+Play music mode

Note:

No.	Mk.	Freq.	Reading Level	Correct Factor	Measure-ment	Limit	Over		Antenna Height	Table Degree	
		MHz	dBuV	dB	dBuV/m	dBuV/m	dB	Detector	cm	degree	Comment
1		75.3472	45.65	-14.25	31.40	40.00	-8.60	QP			
2	*	79.6954	47.58	-14.88	32.70	40.00	-7.30	QP			
3		127.9446	47.66	-14.30	33.36	43.50	-10.14	QP			
4		167.6772	45.37	-14.12	31.25	43.50	-12.25	QP			
5		266.3753	44.15	-10.68	33.47	46.00	-12.53	QP			
6		339.4400	39.41	-7.82	31.59	46.00	-14.41	QP			

6. RADIATED EMISSION MEASUREMENT (ABOVE 1GHz)

6.1. Block Diagram of Test Setup

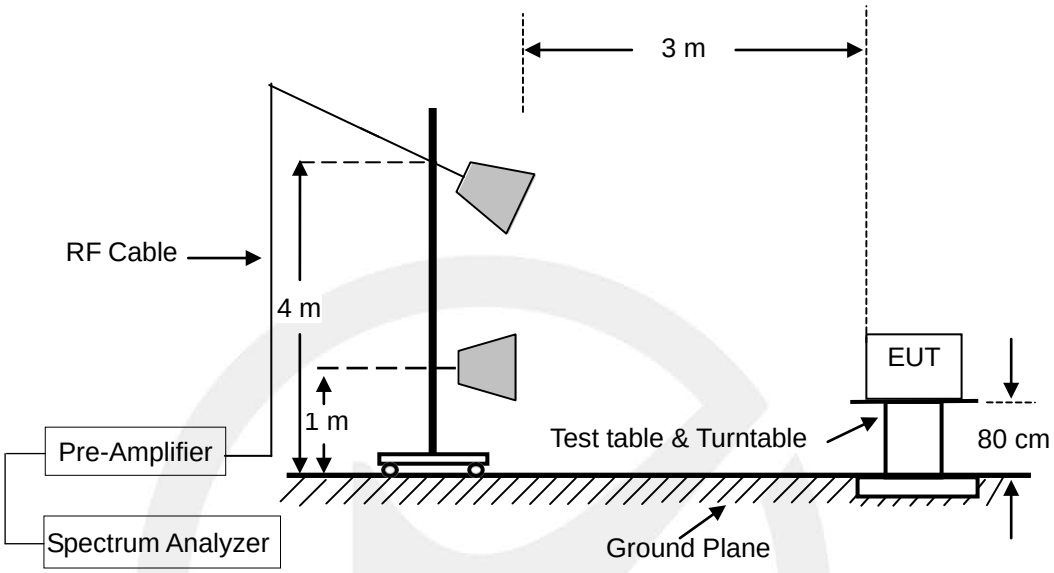

6.2. Radiated Limit

FCC Part 15, Subpart B, Class B

Frequency range GHz	Average limit dB(μV/m)	Peak limit dB(μV/m)
Above 1000	54	74
Note: The highest internal source of an EUT is defined as the highest frequency generated or used in the device or on which the EUT operates or tunes. If the highest frequency of the internal sources of the EUT is less than 1.705 MHz, the measurement shall only be made up to 30 MHz. If the highest frequency of the internal sources of the EUT is between 1.705 MHz and 108 MHz, the measurement shall only be made up to 1 GHz. If the highest frequency of the internal sources of the EUT is between 108 MHz and 500 MHz the measurement shall only be made up to 2 GHz. If the highest frequency of the internal sources of the EUT is between 500 MHz and 1 GHz, the measurement shall only be made up to 5 GHz. If the highest frequency of the internal sources of the EUT is above 1 GHz, the measurement shall be made up to 5 times the highest frequency or 40 GHz, whichever is less.		

6.3. Test Procedure

The EUT was placed on a non-conductive table whose total height equaled 80cm. All units of equipment forming the system under test (includes the EUT as well as connected peripherals and associated equipment or devices) shall be arranged such that a nominal 0.1 m separation is achieved between the neighboring units. Where the mains cable supplied by the manufacturer is longer than 1 m, the excess should be folded at the centre into a bundle no longer than 0.4 m, so that its length is shortened to 1 m.

The EUT was set 3 meters away from the receiving antenna that was mounted on a non-conductive mast. The antenna can move up and down between 1 to 4 meters to find out the maximum emission level.

The turntable can rotate 360 degree to determine the position of the maximum emission level.

The initial testing identified the frequency that has the highest disturbance relative to the limit while operating the EUT in typical modes of operation and cable positions in a test setup representative of typical system configuration.

The identification of the frequency of highest emission with respect to the limit was found by investigating emissions at a number of significant frequencies. The probable frequency of maximum emission had been found and that the associated cable and EUT configuration and mode of operation had been identified.

The frequency range above 1GHz the measuring instrument use RBW=1 MHz and VBW=3 MHz with peak detector for peak values, and use RBW=1 MHz and VBW=10 Hz with peak detector for Average Values.

Test results were obtained from the following equation:
Emission level (dBμV/m) = Antenna Factor - Amp Factor +Cable Loss + Reading
Margin (dB) = Emission Level (dBμV/m) - Limit (dBμV/m)

6.4. Measuring Results

PASS.

Temperature	:	22°C
Humidity	:	43%
Atmospheric Pressure	:	101kpa
Test Engineer	:	LEEY
Test Date	:	2022-2-16

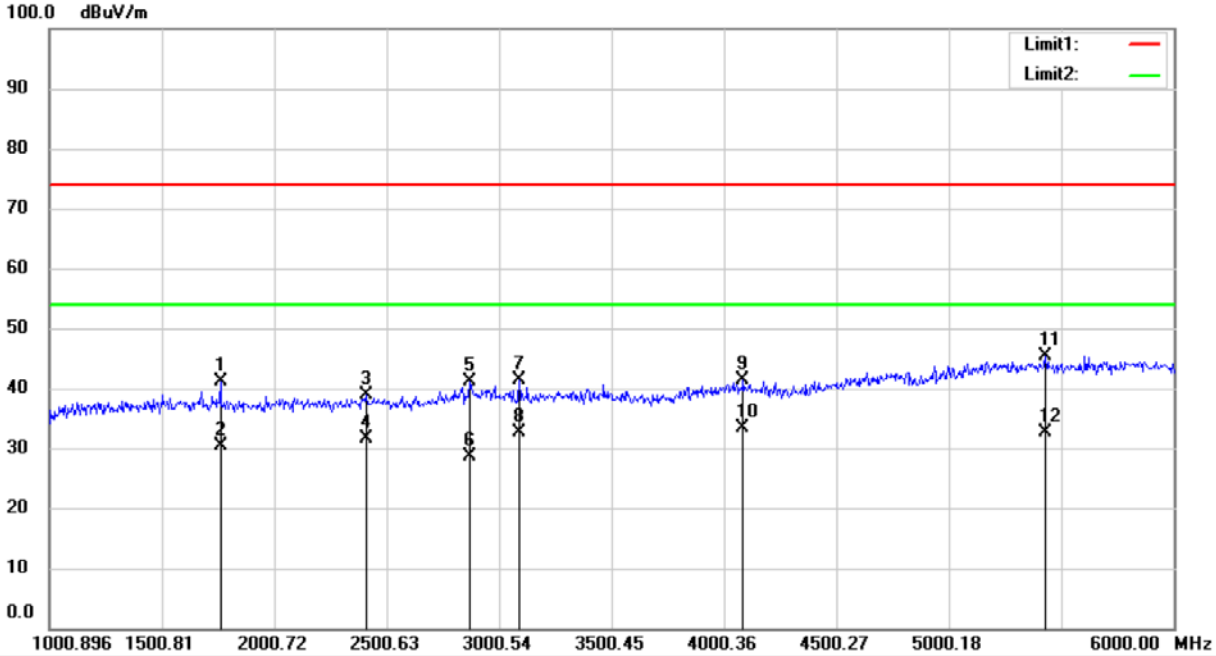

Site 3m Chamber #1 Polarization: *Vertical* Temperature: 22 C

Limit: (RE)FCC PART 15 CLASS B Power: AC 120V/60Hz Humidity: 43 %

Mode: Light+Rotation+Play music mode

Note:

No.	Mk.	Freq.	Reading Level	Correct Factor	Measure-ment	Limit	Over		Antenna Height	Table Degree	
		MHz	dBuV	dB	dBuV/m	dBuV/m	dB	Detector	cm	degree	Comment
1		1763.884	63.73	-22.49	41.24	74.00	-32.76	peak			
2		1763.884	52.89	-22.49	30.40	54.00	-23.60	AVG			
3		2412.518	60.07	-21.18	38.89	74.00	-35.11	peak			
4		2412.518	52.88	-21.18	31.70	54.00	-22.30	AVG			
5		2874.935	60.45	-19.28	41.17	74.00	-32.83	peak			
6		2874.935	47.88	-19.28	28.60	54.00	-25.40	AVG			
7		3094.896	59.94	-18.64	41.30	74.00	-32.70	peak			
8		3094.896	51.24	-18.64	32.60	54.00	-21.40	AVG			
9		4089.093	58.07	-16.59	41.48	74.00	-32.52	peak			
10	*	4089.093	49.99	-16.59	33.40	54.00	-20.60	AVG			
11		5434.476	57.44	-11.95	45.49	74.00	-28.51	peak			
12		5434.476	44.55	-11.95	32.60	54.00	-21.40	AVG			

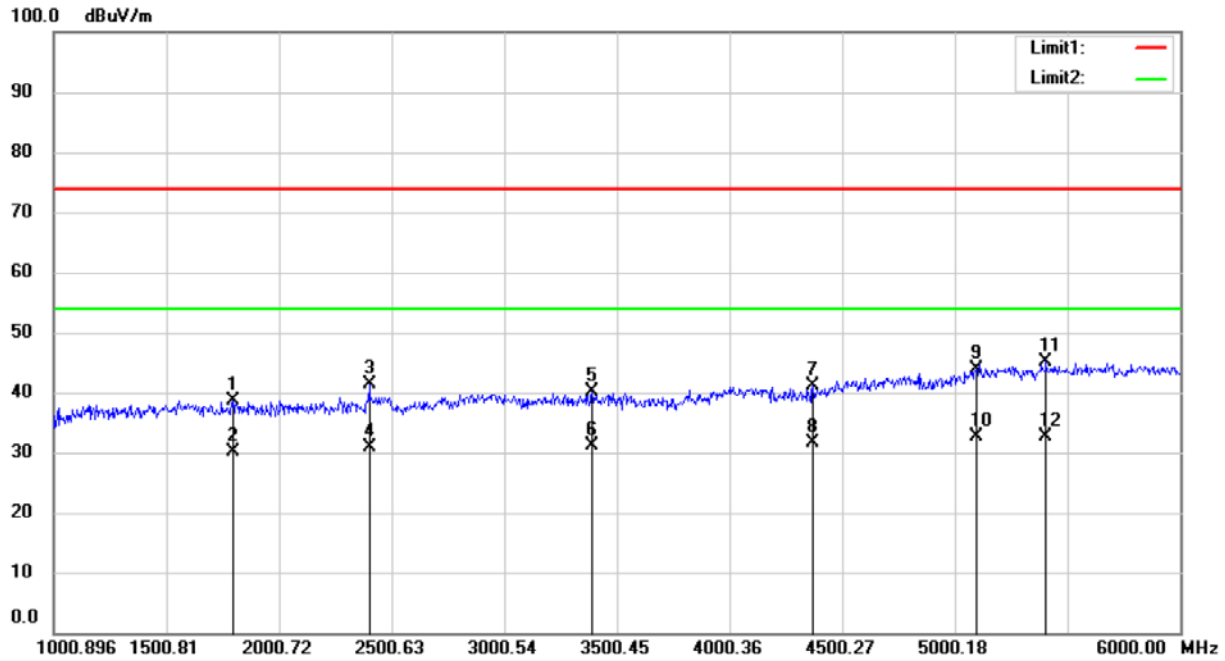

Site 3m Chamber #1 Polarization: ***Horizontal*** Temperature: 22 C

Limit: (RE)FCC PART 15 CLASS B Power: AC 120V/60Hz Humidity: 43 %

Mode: Light+Rotation+Play music mode

Note:

No.	Mk.	Freq.	Reading Level	Correct Factor	Measure-ment	Limit	Over		Antenna Height	Table Degree	
		MHz	dBuV	dB	dBuV/m	dBuV/m	dB	Detector	cm	degree	Comment
1		1795.754	61.21	-22.49	38.72	74.00	-35.28	peak			
2		1795.754	52.59	-22.49	30.10	54.00	-23.90	AVG			
3		2405.019	62.55	-21.21	41.34	74.00	-32.66	peak			
4		2405.019	52.01	-21.21	30.80	54.00	-23.20	AVG			
5		3390.468	58.42	-18.38	40.04	74.00	-33.96	peak			
6		3390.468	49.58	-18.38	31.20	54.00	-22.80	AVG			
7		4372.792	56.67	-15.64	41.03	74.00	-32.97	peak			
8		4372.792	47.34	-15.64	31.70	54.00	-22.30	AVG			
9		5095.787	56.60	-12.84	43.76	74.00	-30.24	peak			
10	*	5095.787	45.44	-12.84	32.60	54.00	-21.40	AVG			
11		5406.981	57.17	-12.02	45.15	74.00	-28.85	peak			
12		5406.981	44.62	-12.02	32.60	54.00	-21.40	AVG			

7. PHOTOGRAPHS

7.1. Photos of Conducted Emission Measurement

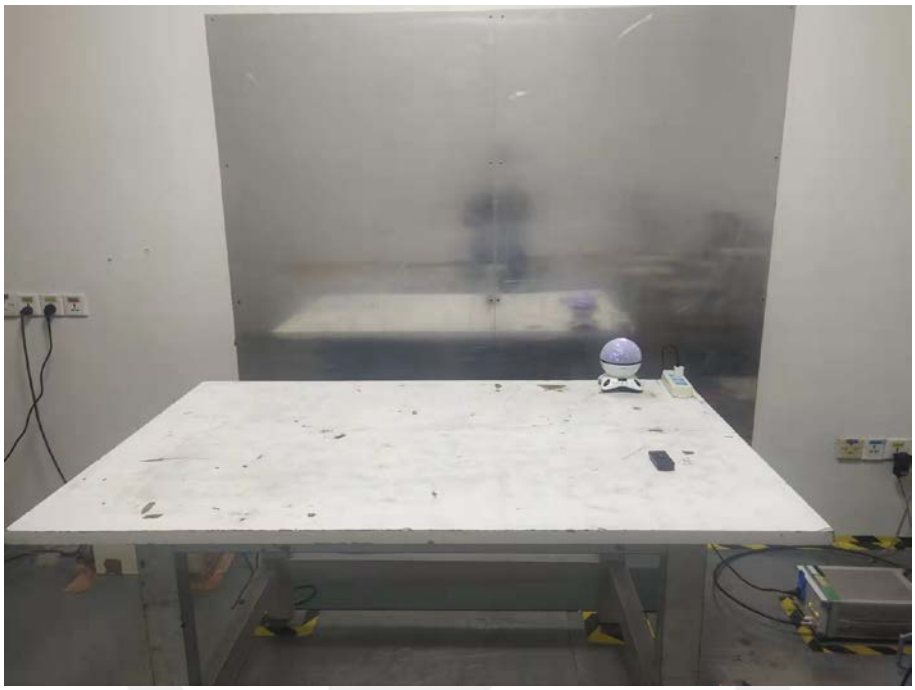

7.2. Photos of Radiation Emission Measurement

Spurious Emission Test Setup (Below 1GHz)

Spurious Emission Test Setup (Above 1GHz)

APPENDIX A: Label Requirements

(1) Receivers associated with the operation of a licensed radio service, e.g., FM broadcast under part 73 of this chapter, land mobile operation under part 90 of this chapter, etc., shall bear the following statement in a conspicuous location on the device:
This device complies with part 15 of the FCC Rules. Operation is subject to the condition that this device does not cause harmful interference.

(2) A stand-alone cable input selector switch, shall bear the following statement in a conspicuous location on the device:
This device complies with part 15 of the FCC Rules for use with cable television service.

(3) All other devices shall bear the following statement in a conspicuous location on the device:
This device complies with part 15 of the FCC Rules. Operation is subject to the following two conditions: (1) This device may not cause harmful interference, and (2) this device must accept any interference received, including interference that may cause undesired operation.

APPENDIX B: Warning Statement

(a) For a Class A digital device or peripheral, the instructions furnished the user shall include the following or similar statement, placed in a prominent location in the text of the manual:

NOTE: This equipment has been tested and found to comply with the limits for a Class A digital device, pursuant to part 15 of the FCC Rules. These limits are designed to provide reasonable protection against harmful interference when the equipment is operated in a commercial environment. This equipment generates, uses, and can radiate radio frequency energy and, if not installed and used in accordance with the instruction manual, may cause harmful interference to radio communications. Operation of this equipment in a residential area is likely to cause harmful interference in which case the user will be required to correct the interference at his own expense.

(b) For a Class B digital device or peripheral, the instructions furnished the user shall include the following or similar statement, placed in a prominent location in the text of the manual:

NOTE: This equipment has been tested and found to comply with the limits for a Class B digital device, pursuant to part 15 of the FCC Rules. These limits are designed to provide reasonable protection against harmful interference in a residential installation. This equipment generates uses and can radiate radio frequency energy and, if not installed and used in accordance with the instructions, may cause harmful interference to radio communications. However, there is no guarantee that interference will not occur in a particular installation. If this equipment does cause harmful interference to radio or television reception, which can be determined by turning the equipment off and on, the user is encouraged to try to correct the interference by one or more of the following measures:
—Reorient or relocate the receiving antenna.
—Increase the separation between the equipment and receiver.
—Connect the equipment into an outlet on a circuit different from that to which the receiver is connected.
—Consult the dealer or an experienced radio/TV technician for help.

APPENDIX C: Photos of EUT

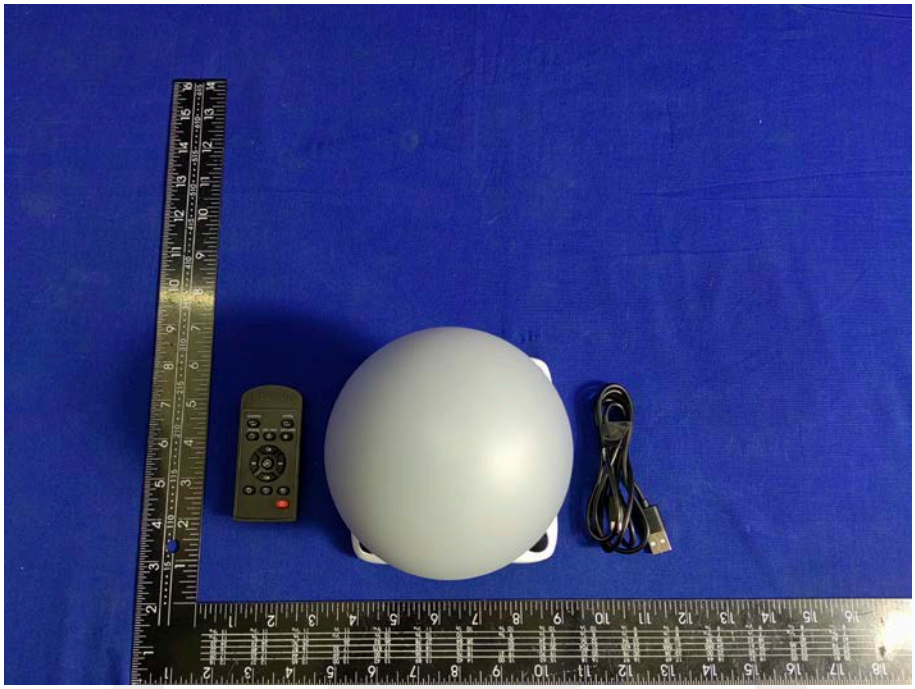

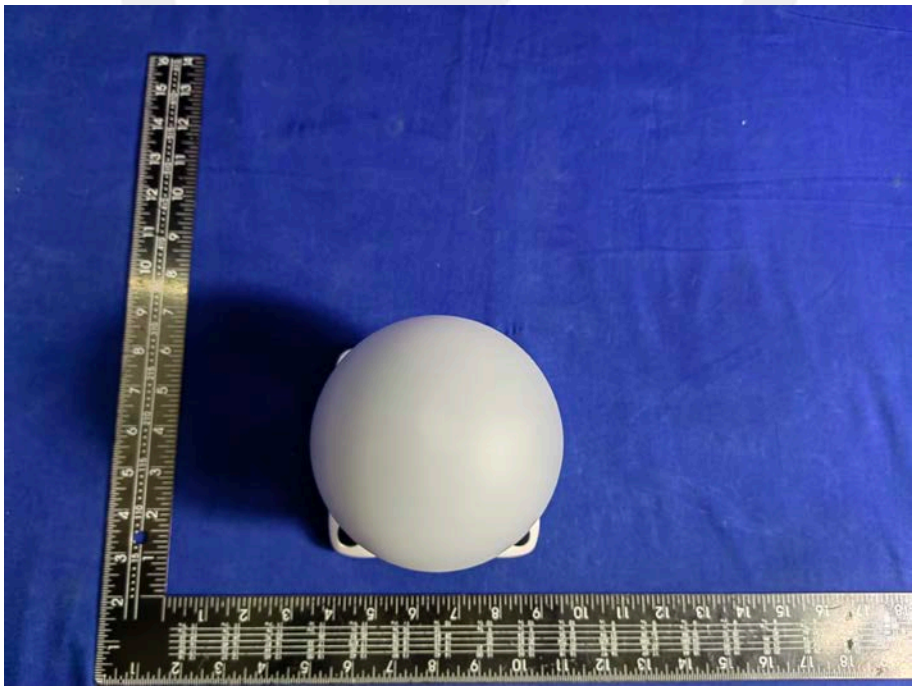

Moredig

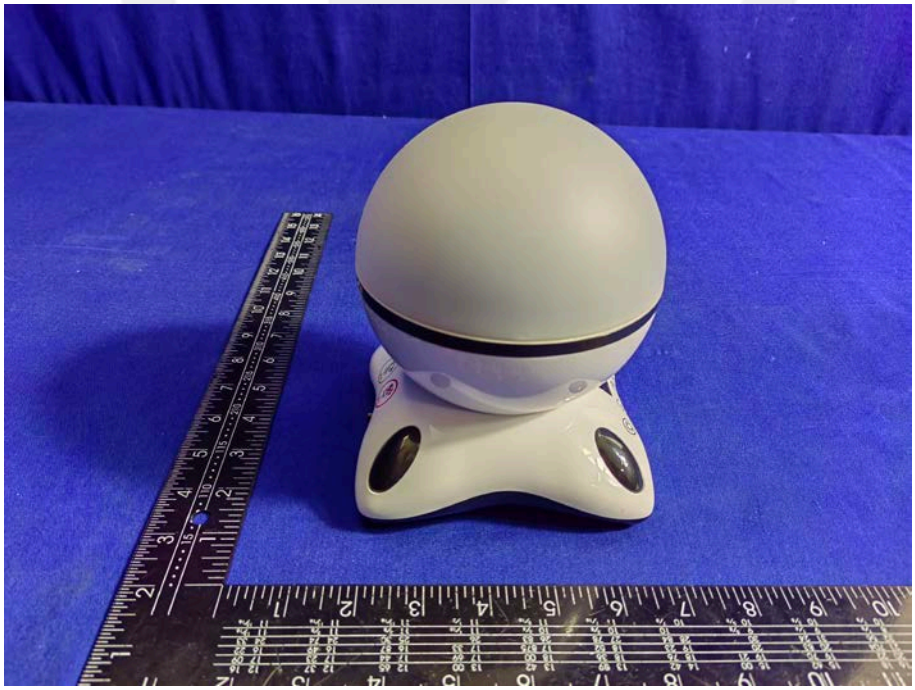

5V DC/1A

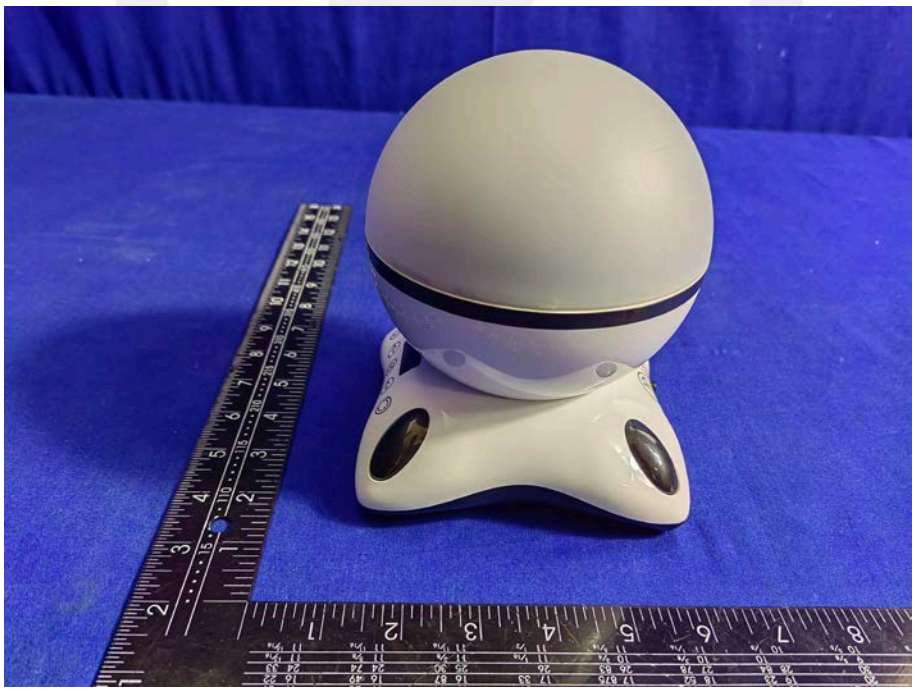

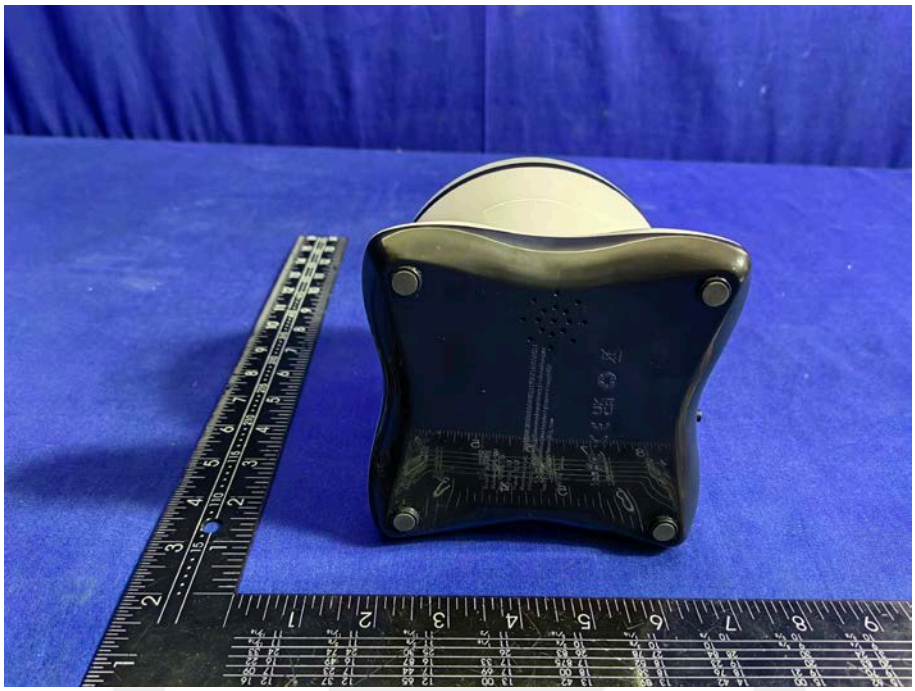

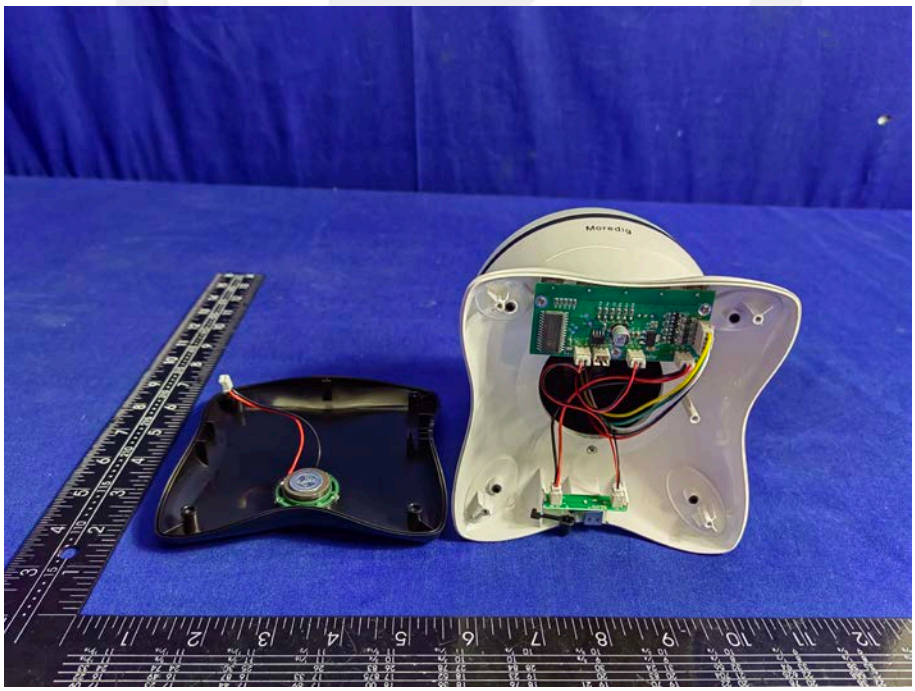
Moredig

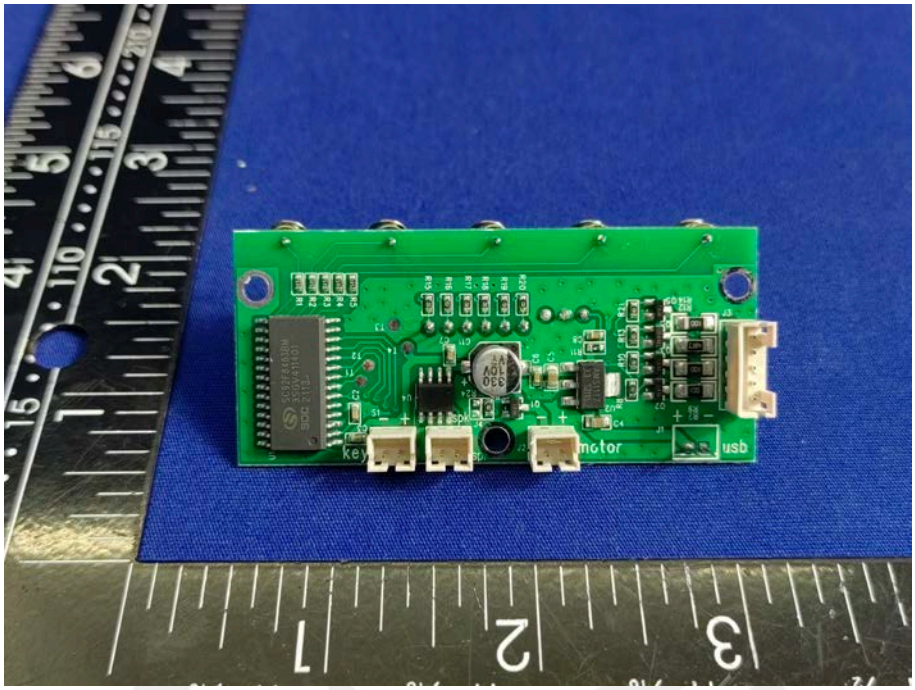

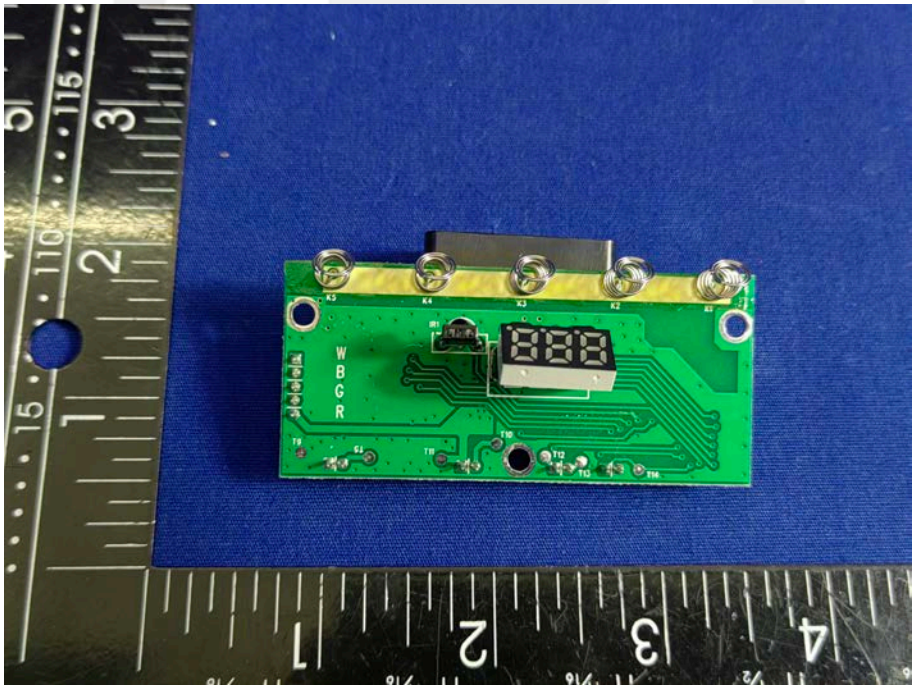

----------The end----------