freeRAN™ LTE Base Station

User Manual

Copyright

Copyright © 2023 Ubiik Inc. All Rights Reserved. No part of this document may be reproduced, transmitted, transcribed, stored in a retrieval system, or translated into any language in any form or by any means without the written permission of Ubiik Inc.

Disclaimer

The contents of this document are subject to revision without notice due to ongoing progress in methodology, design and manufacturing. Ubiik Inc. shall not be held liable for any error or damage of any kind resulting from the use of this document.

Table of Contents

1. Statement ... 5
1.1. Overview ... 5
1.1.1. FCC overview ... 5
1.1.2. Canada, Industry Canada (IC) notices ... 5
1.2. Radiation exposure statement ... 6
1.2.1. FCC radiation exposure statement ... 6
1.2.2. Canada, Industry Canada (IC) radiation exposure statement ... 6
1.2.3. Canada, Industry Canada (IC) detachable antenna statement ... 7
1.3. Professional installation statement ... 7
1.4. Safety statement ... 8
1.5. General hazard statement ... 8
2. Product overview ... 10
2.1. Introduction ... 10
2.2. Modules & interfaces ... 10
3. Deployment ... 13
3.1. Architecture ... 13
3.2. Deployment scenarios ... 14
3.3. Multiple deployments ... 15
4. Data security ... 17
5. Installation ... 19
5.1. Assembly ... 19
5.2. Grounding ... 20
5.3. Mechanical drawings ... 21
5.4. Cable & antenna connection ... 22
6. Starting up ... 24
6.1. Network connectivity ... 24
6.2. Options ... 26
6.3. UEs connection troubleshooting ... 26
7. Network Management System (Ubiik BSMS) ... 28
7.1. BSMS overview ... 28
7.2. Base Station ... 29
7.2.1. eNodeB ... 29
7.2.2. EPC ... 33
7.2.3. OVPN Upload ... 38
7.2.4. Task Log ... 38
7.3. End Device ... 40

8. Admin Config Tool (ACT) software..... 41
8.1. Installation..... 41
8.2. Management..... 41
9. Specifications..... 45
9.1. System specification..... 45
9.2. Features..... 46
Appendix A Terminology abbreviations..... 48
Revision history..... 52
Contact..... 52

1. Statement

1.1. Overview

1.1.1. FCC overview

The freeRAN™ LTE Base Station complies with Part 15 of the FCC Rules. Operation is subject to the following two conditions: (1) This device may not cause harmful interference, and (2) this device must accept any interference received, including interference that may cause undesired operation.

This device has been tested and found to comply with the limits for a Class A digital device, pursuant to Part 15 of the FCC Rules. These limits are designed to provide reasonable protection against harmful interference in a commercial or industrial installation. This device generates, uses and can radiate radio frequency energy and, if not installed and used in accordance with the instructions, may cause harmful interference to radio communications. However, there is no guarantee that interference will not occur in a particular installation. If this device does cause harmful interference to radio or television reception, which can be determined by turning the device off and on, the user is encouraged to try to correct the interference by one of the following measures.

Method	Action
1	Reorient or relocate the receiving antenna
2	Increase the separation between the device and receiver
3	Connect the equipment into an outlet on a circuit different from that to which the receiver is connected
4	Consult the dealer or an experienced RF technician for help

Table 1.1: Approaches to correcting interference

CAUTION!

Any changes or modifications not expressly approved by the party responsible for compliance could void the user's authority to operate this device.

1.1.2. Canada, Industry Canada (IC) notices

This device contains license-exempt transmitter(s) that comply with innovation, Science and Economic Development Canada's Licence-exempt RSS(s). Operation is subject to the following two conditions:

1. This device may not cause interference.
2. This device must accept any interference, including interference that may cause undesired operation of the device.

Canada, Avis d'Industrie Canada (IC)

Cet appareil contient un ou des émetteurs exemptés de licence conformes aux normes RSS exemptes de licence d'Innovation, Sciences et Développement économique Canada. Son fonctionnement est soumis aux deux conditions suivantes :

1. Cet appareil ne doit pas causer d'interférences.
2. Cet appareil doit accepter toute interférence, y compris celles pouvant entraîner un fonctionnement non désiré de l'appareil.

1.2. Radiation exposure statement

1.2.1. FCC radiation exposure statement

The antenna(s) used for this transmitter must not be co-located or operating in conjunction with any other antenna or transmitter. This device complies with FCC radiation exposure limits set forth for an uncontrolled environment. In order to avoid the possibility of exceeding the FCC radio frequency exposure limits, human proximity to the antenna shall not be less than 10.6 inches (27 cm) during normal operation.

1.2.2. Canada, Industry Canada (IC) radiation exposure statement

The radiated output power of the Wireless Device is below the innovation, Science and Economic development Canada (ISED) radio frequency exposure limits. The Wireless Device should be used in such a manner such that the potential for human contact during normal operation is minimized.

This device has also been evaluated and shown compliant with the IC RF Exposure limits under mobile exposure conditions. (Antennas are greater than 27 cm from a person’s body).

Canada, Déclaration d'exposition aux radiations d'Industrie Canada (IC)

La puissance de sortie rayonnée de l'appareil sans fil est inférieure aux limites d'exposition aux fréquences radio d'Innovation, Sciences et Développement économique Canada (ISED). L'appareil sans fil doit être utilisé de manière à minimiser le potentiel de contact humain pendant son fonctionnement normal.

Cet appareil a également été évalué et s'est avéré conforme aux limites d'exposition RF de l'IC dans des conditions d'exposition mobile. (Les antennes sont situées à plus de 27 cm du corps d'une personne).

1.2.3. Canada, Industry Canada (IC) detachable antenna statement

This radio transmitter IC: 31321-BS1ALDEO9100 has been approved by Industry Canada to operate with the antenna types listed below with the maximum permissible gain and required antenna impedance for each antenna type indicated. Antenna types not included in this list, have a gain greater than the maximum gain indicated for that type, are strictly prohibited for use with this device.

Canada, Déclaration d'antenne amovible d'Industrie Canada (IC).

Cet émetteur radio IC : 31321-BS1ALDEO9100 a été approuvé par Industrie Canada pour fonctionner avec les types d'antennes énumérés ci-dessous, en respectant le gain maximal autorisé et l'impédance d'antenne requise pour chaque type d'antenne indiqué. Les types d'antennes qui ne sont pas inclus dans cette liste, qui ont un gain supérieur au gain maximal indiqué pour ce type, sont strictement interdits pour une utilisation avec cet appareil.

Technology	Brand	Model	Freq. range	Antenna gain	Antenna Type
SRD 4	M.gear	C1991-690054-A	924.8 - 927.8 MHz	2.65 dBi	Dipole
SRD 3	M.gear	C1991-690053-A	924.8 - 927.8 MHz	1.2 dBi	Dipole
SRD 2	Invax	DS0915-0726WNM	924.8 - 927.8 MHz	4.69 dBi	Dipole
SRD 1	Invax	DS0915-0727WNM	924.8 - 927.8 MHz	3.07 dBi	Dipole
GNSS	Jinchang	JCA225-N	1561.098 ~ 1602 MHz	5 dBi	RHCP
LTE	Grand-Tek	OA-LTEWB-035-C0-UB	1850 - 1910 MHz 1710 - 1755 MHz 777 - 787 MHz	1.81 dBi 0.6 dBi 1.4 dBi	OMNI

Table 1.2.3: Antenna information (WiFi/SRD)

1.3. Professional installation statement

1. Installation personnel: This device is designed for specific applications and needs to be installed by qualified personnel who have RF and related regulations knowledge. The general user should not attempt to install or change the settings.
2. Installation location: The device should be installed at a location where the radiating antenna can be kept 10.6 inches (27 cm) from any nearby person in normal operating conditions to meet regulatory RF exposure requirements.
3. Installation procedure: Please refer to the procedure for mounting the device to a wall or pole.

4. Warning: Please carefully select the installation position and make sure that the final output power does not exceed the limits set in relevant rules. Violation of rules could lead to serious federal penalties.

1.4. Safety statement

All instructions, warning and caution statements that accompany this device must be strictly followed at all times to ensure its safe use. Observe all warning and caution symbols that are fixed to this device. This device has been designed with the utmost care for the safety of installers and users. However, when using this device, basic safety precautions should always be followed to reduce the risk of injury and electric shock. Do not cover the device or block the airflow to the device with any other objects. This device was qualified under test conditions that included the use of the supplied cables between system components.

To comply with regulations, the user must use the cables supplied with the unit (including power adapter) and follow the installation guide. Place the unit to allow for easy access when disconnecting the power adapter from the main wall outlet. Operate this device only with the type of power source indicated on the marking label. If you are not sure of the type of power supplied to your facility, consult your dealer or local electricity provider.

Do not use this product near water, for example a swimming pool or a bathroom. Keep the device away from excessive heat and humidity and keep the device free from vibration and dust. Wipe the unit with a clean, dry cloth. Never use cleaning fluid or similar chemicals. Do not spray cleaners directly on the unit or use forced air to remove dust.

Avoid installing or using this product during an electrical storm - there may be a remote risk of electric shock from lightning. During electrical storms, for added protection from lightning or power surges we suggest unplugging the unit from the wall outlet and disconnecting all cables. For safety reasons, only authorized service technicians should open the device. If the device is opened the warranty will become void. The device may also affect medical equipment – we recommend checking any potential impact on medical equipment prior to use. This device, like other radio devices, emits radio frequency electromagnetic energy, but operates within the guidelines found in radio frequency safety standards and recommendations. It is recommended that the minimum operating distance from the installed Base Station to person is 10.6 inches (27cm).

1.5. General hazard statement

Safety notes are marked with symbols. Ignoring the safety notes may lead to personal injury, damage to the instrument and malfunctions. Signal Words identify the hazard severity level as the following:

Word	Meaning
DANGER	Indicates an extremely hazardous situation which, if not avoided, will result in death or serious injury, permanent damage to equipment or large fines and

Word	Meaning
	penalties
WARNING	Indicates a hazardous situation which, if not avoided, could result in serious injury or damage to equipment and moderate fines or penalties
CAUTION	Indicates a hazardous situation which, if not avoided, could result in minor injury or minor damage to equipment or minor to moderate penalty fees
NOTICE	Indicates a hazardous situation not related to personal injury or damage to equipment

Table 1.5: Safety notes

2. Product overview

2.1. Introduction

The freeRAN™ LTE Base Station is an innovative and cost-effective solution for creating a private LTE (pLTE) IoT network. The solution utilizes LTE Cat-1 and LTE-M technology and provides a standardized and flexible 3GPP compliant cellular approach to low-power, long-range networks suitable for IoT devices. The freeRAN™ LTE Base Station utilizes the unlicensed ISM band (902MHz – 928MHz), reducing the significant cost barrier to deploying a pLTE network of securing licensed spectrum.

Offering a standardized and flexible cellular approach to low-power, long-range networks, the freeRAN™ LTE Base Station provides a solution-in-a-box for building an LTE network either utilizing a user's specified core network or one built into freeRAN™ directly.

Supporting bidirectional wireless communication for both stationary and mobile IoT devices, the freeRAN™ LTE Base Station is the ideal solution for remote data collection, monitoring and management of IoT devices. With a Linux operating system to allow for easy plug-and-play operation and connection to the cloud via either Power over Ethernet (PoE) or LTE backhaul, the freeRAN™ LTE Base Station combines affordability with the scalability, spectral efficiency and security brought by LTE technology.

The freeRAN™ LTE Base Station offers a seamless combination of affordability with the many benefits brought by LTE technology, such as scalability, efficiency and security. The solution enables the deployment of future-proof, private LTE-based networks to enhance grid reliability and resilience.

Figure 2.1: freeRAN™ LTE Base Station

2.2. Modules & interfaces

The items listed in Table 2.2-1 are included as standard options for the freeRAN™ LTE Base Station. An example of the accessories included as part of this standard offering can be

seen in Figure 2.2-1. Note that the unit provided is configured to the user's specifications during the ordering process, and the actual accessories may vary from those shown in the diagram.

Ref	Item	Qty
A	freeRAN™ LTE Base Station	1
B	GPS antenna	1
C	RF Antenna	1
D	Power-Over-Ethernet (PoE) injector	1
E	Cable grip for Ethernet	1
F	Mounting kit	1
G	Backhaul LTE antenna	1

Table 2.2-1: Items included in a standard freeRAN™ LTE Base Station product offering

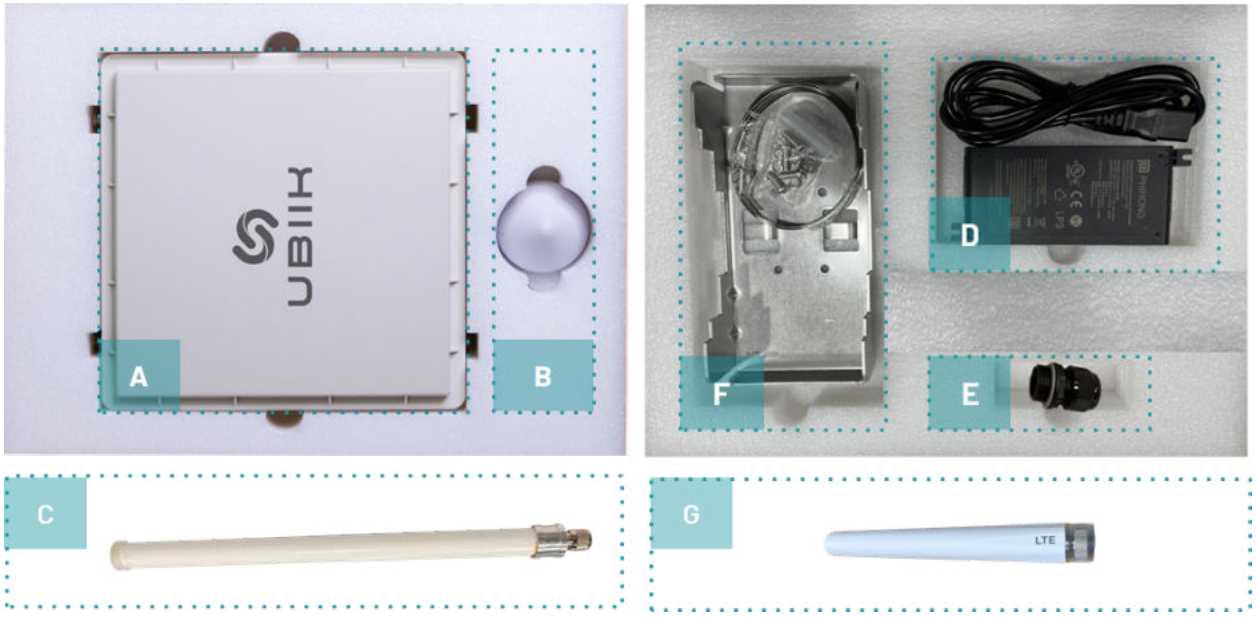

Figure 2.2-1: Items included in a standard freeRAN™ LTE Base Station product offering

Table 2.2-2 and Figure 2.2-2 below depicts the freeRAN™ LTE Base Station, illustrating all the available modules, ports, interfaces, and LEDs. Note that this is the rear view of the unit. Instructions for connecting each component are provided in the Installation section.

Ref	Item	Ref	Item
A	RF Antenna connector	E	SIM card slot
B	freeRAN™ LTE Base Station	F	White and green LEDs
C	GPS antenna connector	G	Backhaul LTE antenna connector
D	Ethernet port (PoE)		

Table 2.2-2: Modules, interfaces and ports

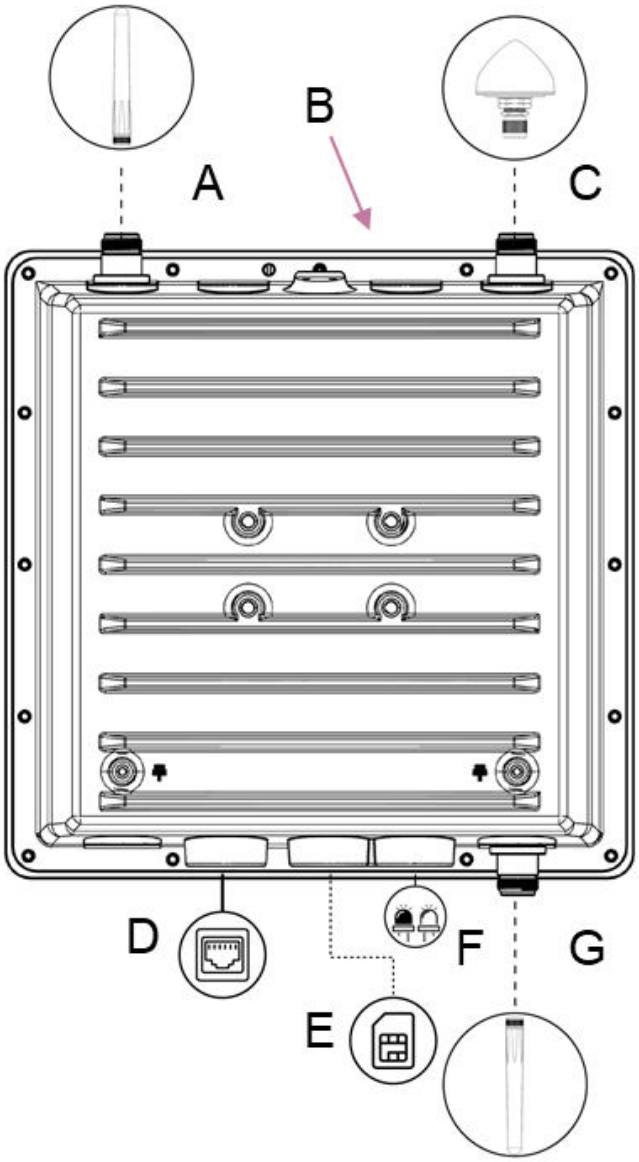

Figure 2.2-2: Modules, interfaces and ports

3. Deployment

3.1. Architecture

The freeRAN™ LTE Base Station can be configured to operate with the eNB (evolved NodeB) and built-in EPC (Evolved Packet Core) or with the eNB and external EPC. The first option allows customers to easily deploy the entire LTE network with just one freeRAN™ unit. Customers need to establish a connection from the freeRAN™ LTE Base Station to the Application Server. Figure 3.1-1 illustrates the architecture of the freeRAN™ LTE Base Station with a built-in EPC.

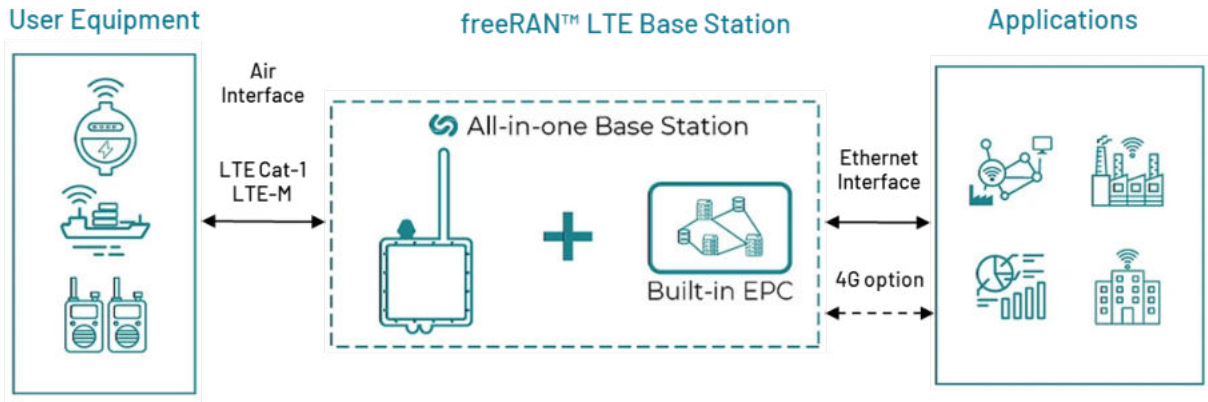

Figure 3.1-1: freeRAN™ LTE Base Station with built-in EPC

Configuration with an external EPC is used to deploy a network with multiple base stations to extend the service area. In this scenario, each freeRAN™ LTE Base Station connects to the EPC using the standard S1 interface, as shown in Figure 3.1-2.

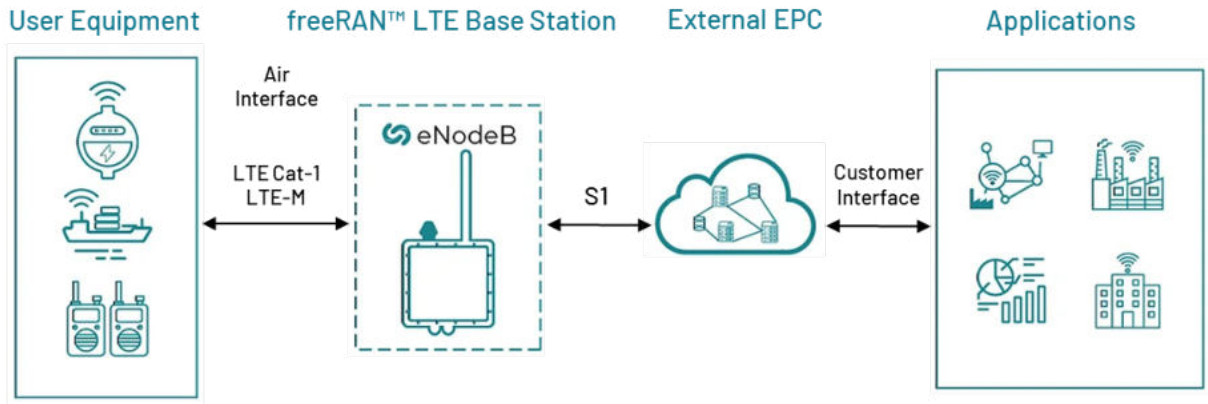

Figure 3.1-2: freeRAN™ LTE Base Station and external EPC

3.2. Deployment scenarios

The freeRAN™ LTE Base Station can be deployed as a private network by a customer, as shown in Figure 3.2-1. In this configuration, the built-in EPC is utilized, and SIMs are provisioned on the freeRAN™ HSS (Home Subscriber Service). The freeRAN™ LTE Base Station performs the function of authenticating the UEs in the network.

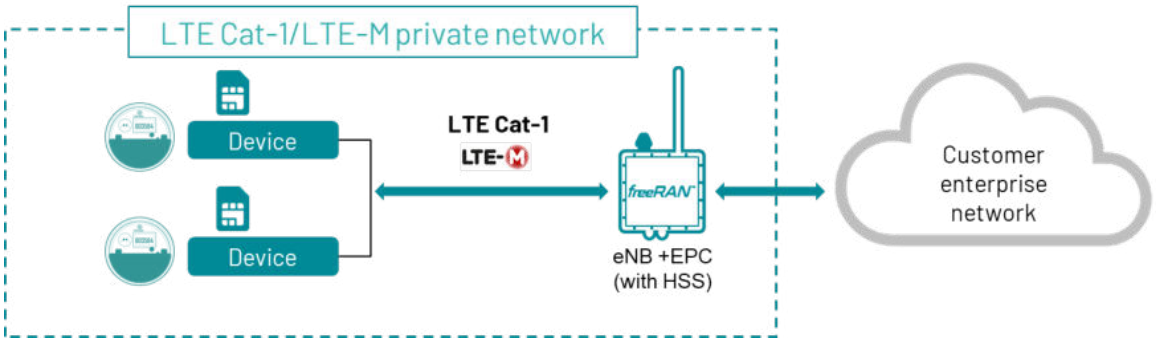

Figure 3.2-1: freeRAN™ LTE Base Station deployed as a private network

In scenarios aimed at extending the range of an existing RAN (Radio Access Network), the freeRAN™ LTE Base Station can be deployed, as shown in Figure 3.2-2. The freeRAN™ LTE Base Station serves as an eNB and interfaces with the EPC within the customer's network. In this configuration, the freeRAN™ LTE Base Station does not handle UEs authentication; instead, the SIMs are provisioned on the HSS of the external EPC.

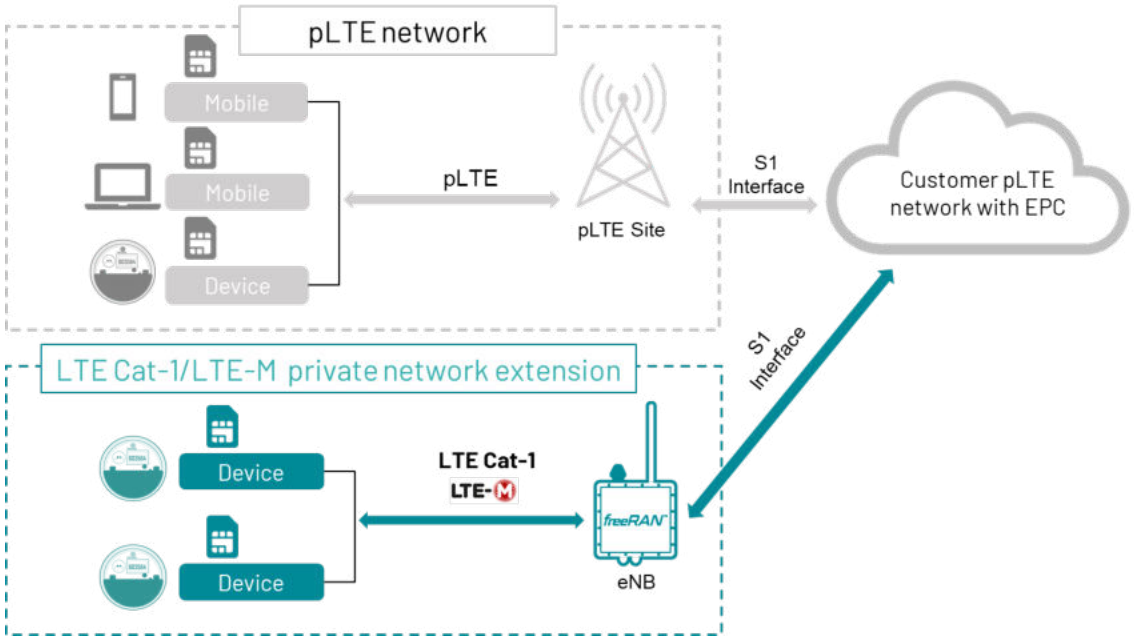

Figure 3.2-2: freeRAN™ LTE Base Station deployed as an eNB to extend a customer's network

Additionally, the freeRAN™ LTE Base Station can be deployed as a private network with a built-in EPC and connected to an external HSS using the S6a interface, as shown in Figure 3.2-3. This setup is suitable for extending the range of an MNO (Mobile Network Operator) network and can also be employed when utilizing the HSS of a SIM provider, which might be deployed in the cloud. In this case, the freeRAN™ LTE Base Station doesn't handle UEs authentication, and SIMs are provisioned on the operator's HSS or the HSS of the SIM provider.

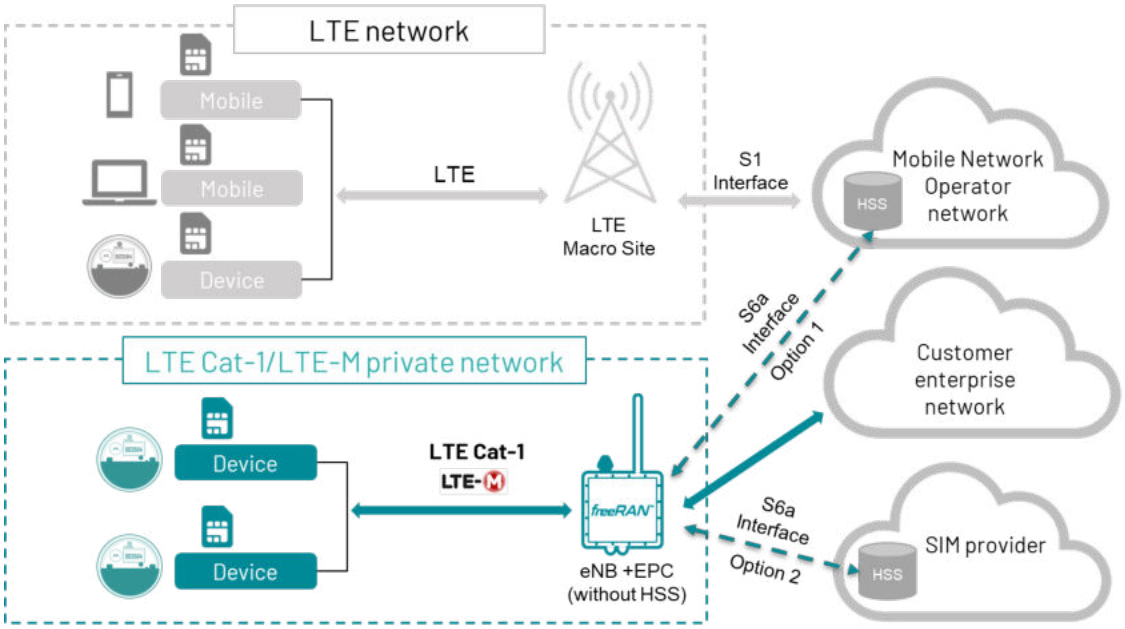

Figure 3.2-3: freeRAN™ LTE Base Station deployed as a private network with a connection to the HSS of the MNO or SIM provider

3.3. Multiple deployments

Depending on the coverage area size and the business requirements, deploying a network of multiple base stations, similar to how mobile operators establish public networks with numerous base stations and a centralized EPC, might be essential. Leveraging the scalability offered by the 3GPP standards, the freeRAN™ LTE Base Station can create networks of varying scales. In multiple deployments, each freeRAN™ connects to a central EPC through a standard S1 interface, and the internal EPC of the freeRAN™ units is inactive. For this network configuration, deploying a dedicated EPC, either on-premises or in the cloud, is crucial. This setup accommodates networks ranging from two to several hundred freeRAN™ units, providing customers with adaptability and scalability. Additional base stations can be seamlessly integrated into the existing network after the initial deployment of the freeRAN™ network with a single external EPC.

There are two network configuration options available for freeRAN™ backhaul interfaces. The first configuration employs Ethernet connectivity, allowing all freeRAN™ units to

establish connections and communicate with the EPC via the local network infrastructure. The second configuration utilizes LTE Cat 1 backhaul interfaces for seamless connectivity between freeRAN™ units and the EPC. When freeRAN™ is configured to use the LTE Cat 1 backhaul interface, data from freeRAN™ is transmitted to the mobile operator's network. The network then forwards the data to the customer's endpoint, typically employing a dedicated APN (Access Point Name) and secure communication channels. In Figure 3.3, both backhaul interface options are displayed.

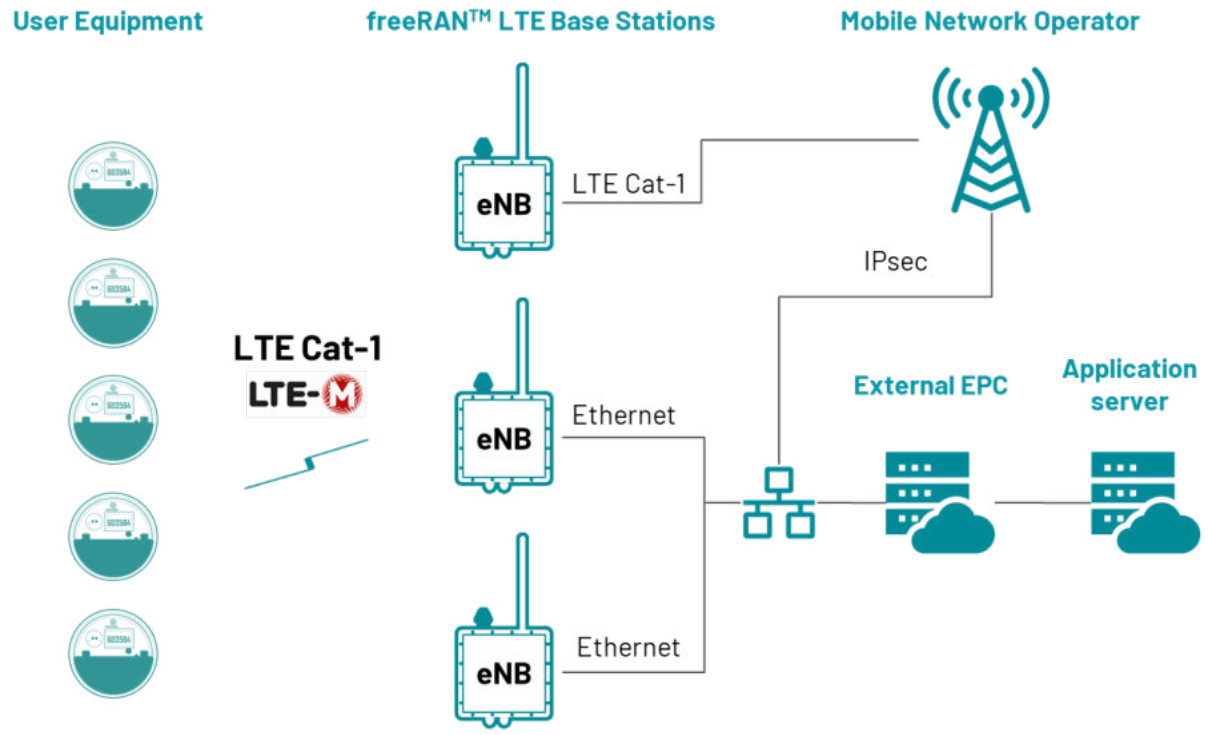

Figure 3.3: Backhaul options for multiple deployments of freeRAN™ LTE Base Stations

4. Data security

The freeRAN™ LTE Base Station provides a high data security standard that is defined by LTE design. LTE is the only mature wireless technology to enable protection of session set-up and administration signals (control plane) separately from the data payload itself (user plane). Through its Authentication and Key Agreement protocol, LTE secures control plane communications independently from user plane data. LTE includes cryptographic protections for control plane communications between the device and three different network elements to prevent attackers from spoofing devices and/or network elements to compromise the system.

To protect control plane communications between the device and the HSS (Home Subscriber Server), LTE uses an application called USIM that typically runs on the UICC (Universal Integrated Circuit Card). Through USIM, LTE supports the authentication of the user to the device as well as authentication of the device to the HSS, which manages customer information and authorizes the device's access to the network. The MME (Mobile Management Entity) is also a core network element; it manages device mobility on the network. Using a feature called NAS (Non-Access Stratum) security, LTE verifies, encrypts, and protects the integrity of control plane signaling between the device and the MME separately from other interfaces. For protection of the device's control plane communications with the radio network, LTE employs AS (Access Stratum) security, which provides verification and integrity protection as well as encryption for control plane signaling between the device and the base station.

LTE provides enhanced security measures to protect the user data contained in the payload of the communication. For the user plane, LTE utilizes integrity verification and encryption of data sent between the device and the core network. The Figure 4 shows described security levels.

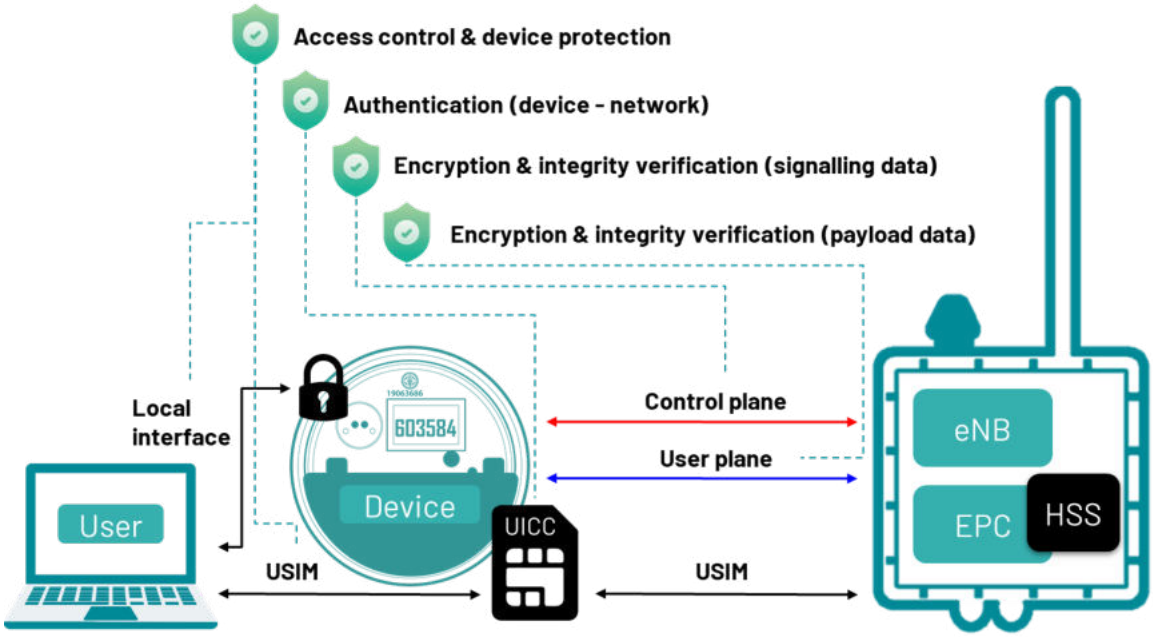

Figure 4: Data security levels

LTE Cat-1 and LTE-M devices provide an additional layer of security, due to their strict adherence to 3GPP specifications, the high security level industry standard, and the highly competitive market they are produced in. Such devices are typically designed with built-in security features, such as secure access, secure boot and firmware updates, to help prevent unauthorized access and tampering. Supported by major mobile equipment, chipset and module manufacturers, private LTE networks benefit from all the security features of 3GPP standards, such as support for user and device authentication, data encryption, data integrity verification and mobile equipment protection.

5. Installation

5.1. Assembly

The pole mounting kit is included as part of the standard offering, providing a mounting system suitable for typical installation environments. Using this kit, the freeRAN™ LTE Base Station can be securely mounted directly onto a pole with a diameter ranging from 4 to 12 inches (100 mm to 300 mm). Note that the wall mounting kit can be chosen during the ordering process. Table 5.1 and Figure 5.1 below shows the mounting items.

Qty	Item	Qty	Item
1	freeRAN™ LTE Base Station	4	Washers
1	Mounting Plate	4	Spring Washers
4	Screws	2	Hose Clamps

Table 5.1: Items of the pole mounting kit

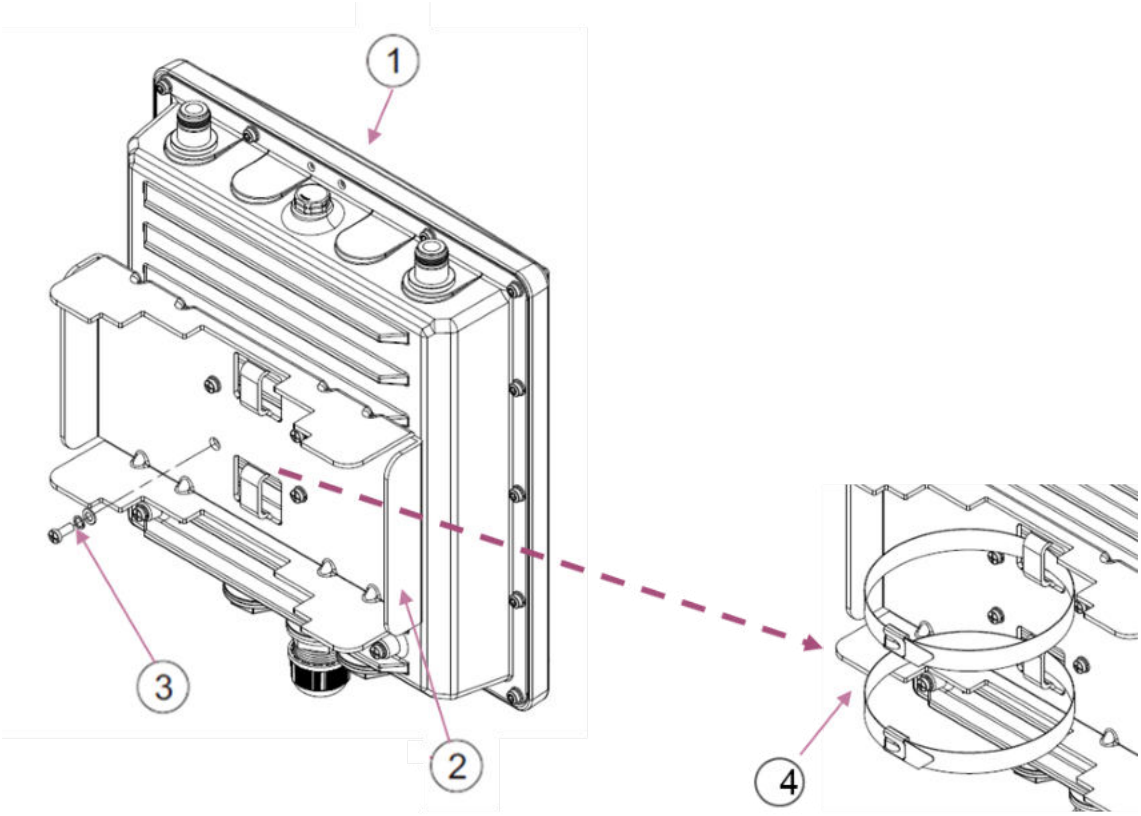

Figure 5.1: Items of the pole mounting kit

Step 1. Use the four screws, spring washers and washers (3) to attach the mounting plate (2) onto the freeRAN™ LTE Base Station (1).

Step 2. Pass the two Hose Clamps (4) through the matching hole in the mounting plate (2) as shown.

Step 3. Loop the open Hose clamps around the pole chosen for the installation and tighten the screw until the unit is secure.

5.2. Grounding

Ensure that the installation of the freeRAN™ LTE Base Station is conducted in accordance with all relevant national and local building and safety codes. Even if grounding is not mandatory according to applicable regulations and national codes, it is highly recommended to ground the unit. This precaution will provide protection against voltage surges and static charges. The two grounding screws ⏚ x12 (marked) are located on the back of the unit, see Figure 5.2 below). Table 5.2 displays the grounding items included in a standard freeRAN™ LTE Base Station product offering. Note that the grounding cable is not part of the standard offering.

Qty	Item	Qty	Item
2	Screws	2	Spring Washers
2	Washers		

Table 5.2: Items of the grounding

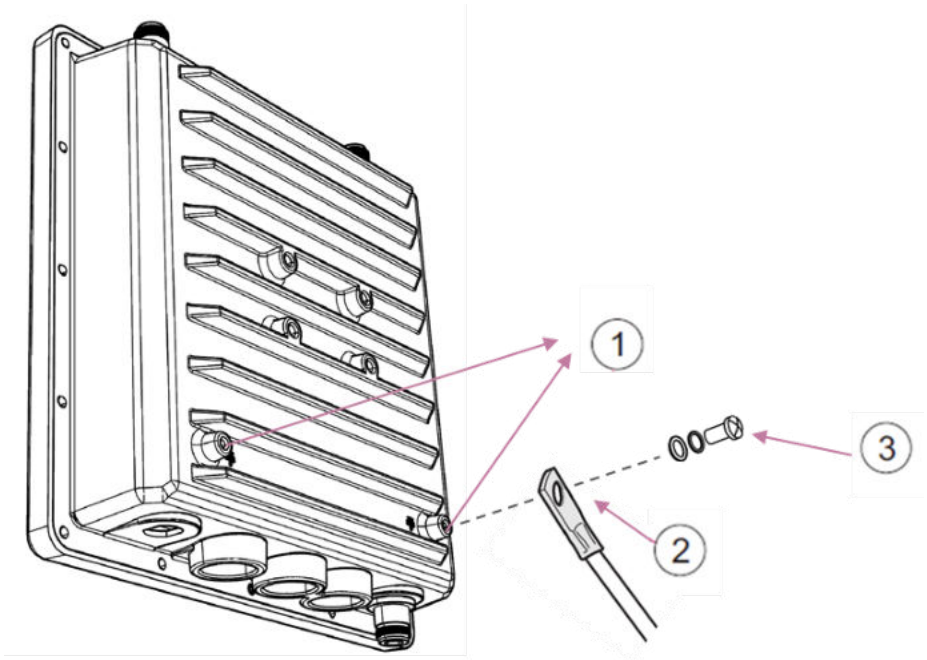

Figure 5.2: Items of the grounding

Step 1. Connect one end of a grounding cable (2) to the grounding screw (3), then connect the grounding screw to the one of two grounding points on the back of the unit (1) and securely tighten it.

Step 2. Connect the opposite end of the grounding cable to a reliable ground (earth) connection.

WARNING!

Always connect the grounding cable before connecting any other cables.

5.3. Mechanical drawings

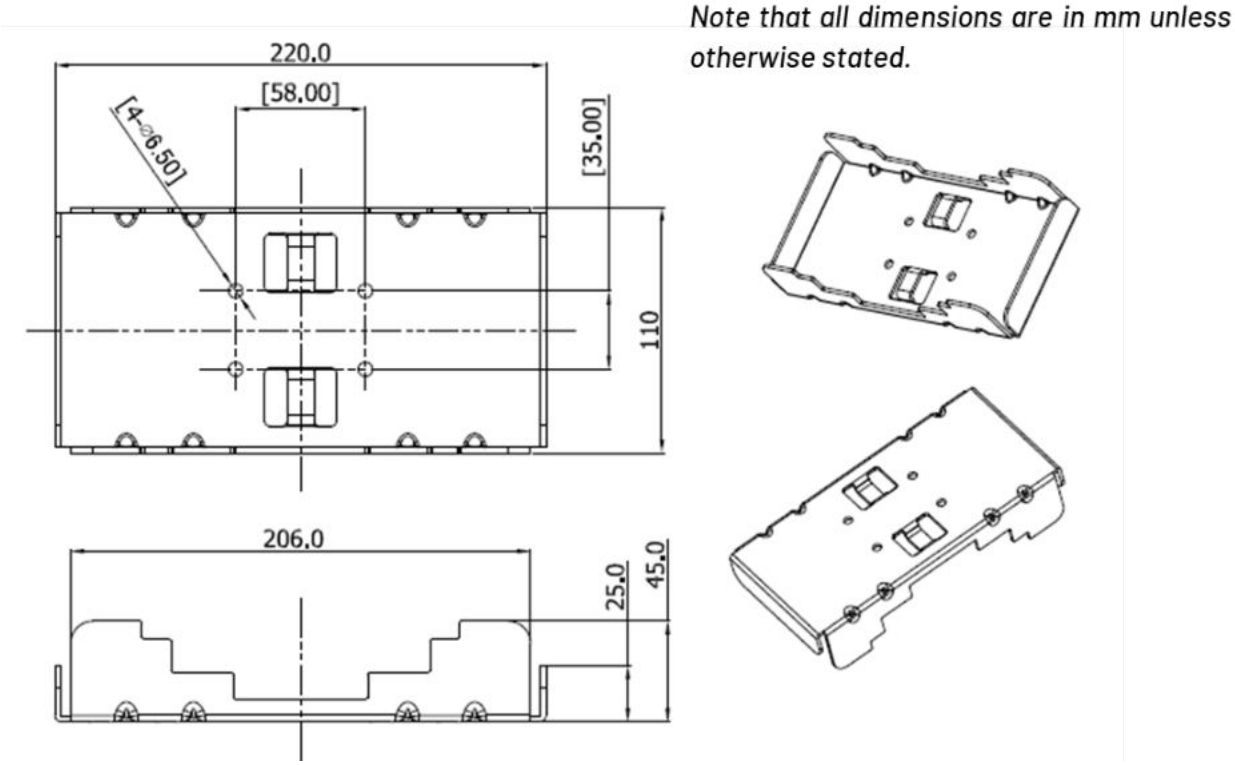

Figure 5.3-1: Mechanical drawings: mounting plate

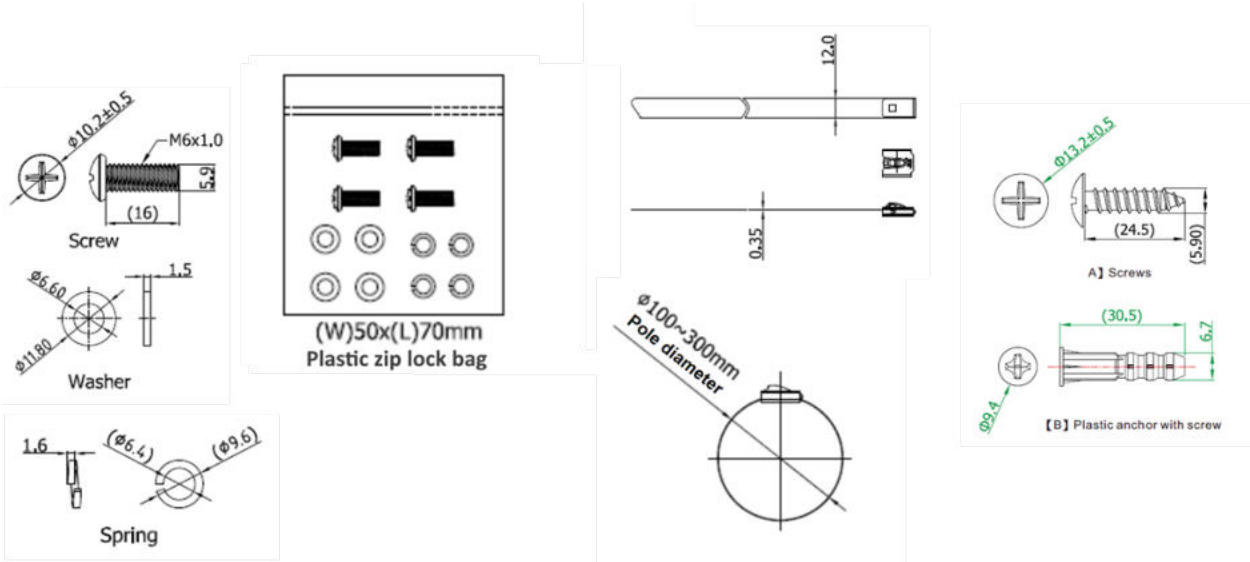

Figure 5.3-2: Mechanical drawings: screw, spring washer, washer, hose clamp, anchor & screw

5.4. Cable & antenna connection

The standard freeRAN™ LTE Base Station requires an RF antenna, backhaul LTE antenna and GPS antenna. The process of attaching these antennas is shown in Figure 5.4-1.

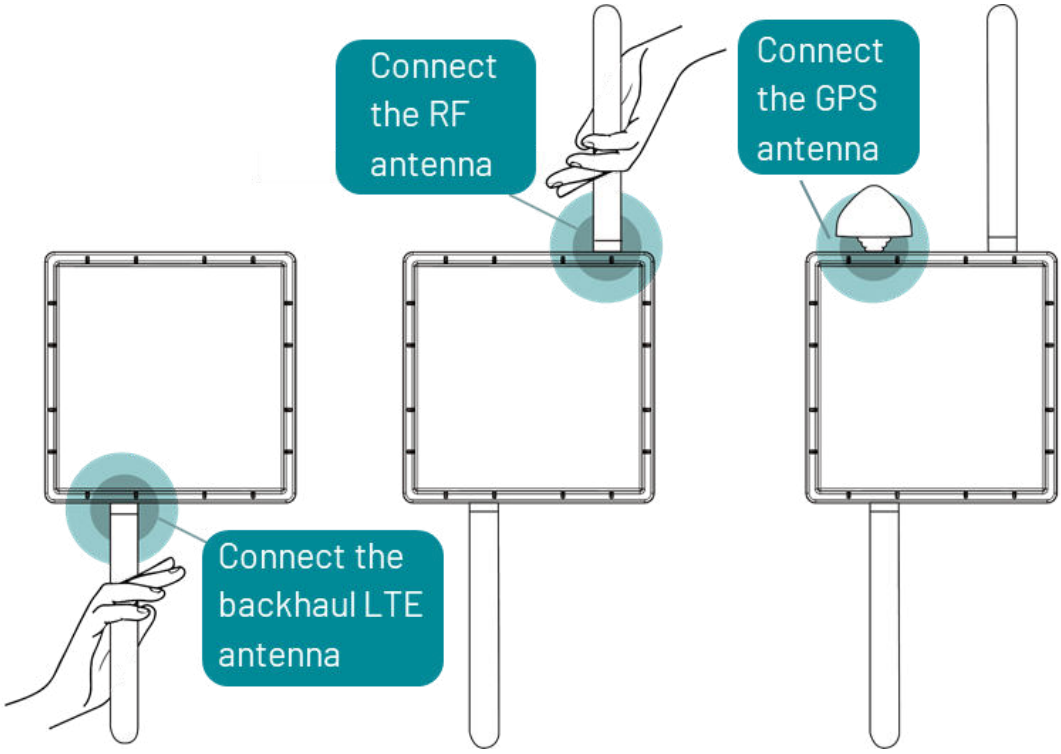

Figure 5.4-1: Attaching the antennas to the freeRAN™ LTE Base Station

The freeRAN™ LTE Base Station is supplied without an Ethernet cable in the standard package, which means that users should utilize their own Cat 5e or Cat 6 Ethernet cable with shielding to meet the IEEE 802.3bt standard requirements for the backhaul connection. The user should attach the cable grip to the Ethernet wire and plug one end into the freeRAN™ LTE Base Station, and the other end into the local network router, as shown in Figure 5.4-2. If using an outdoor version of the freeRAN™ LTE Base Station, screw in the cable grip to ensure a water-tight seal suitable for outdoor use. For an actual outdoor installation, cable grips must be applied to guarantee IP67 ingress protection.

WARNING!

Choose the Cat 5e or Cat 6 Ethernet cable with shielding to meet the IEEE 802.3bt standard requirements to supply POE injector.

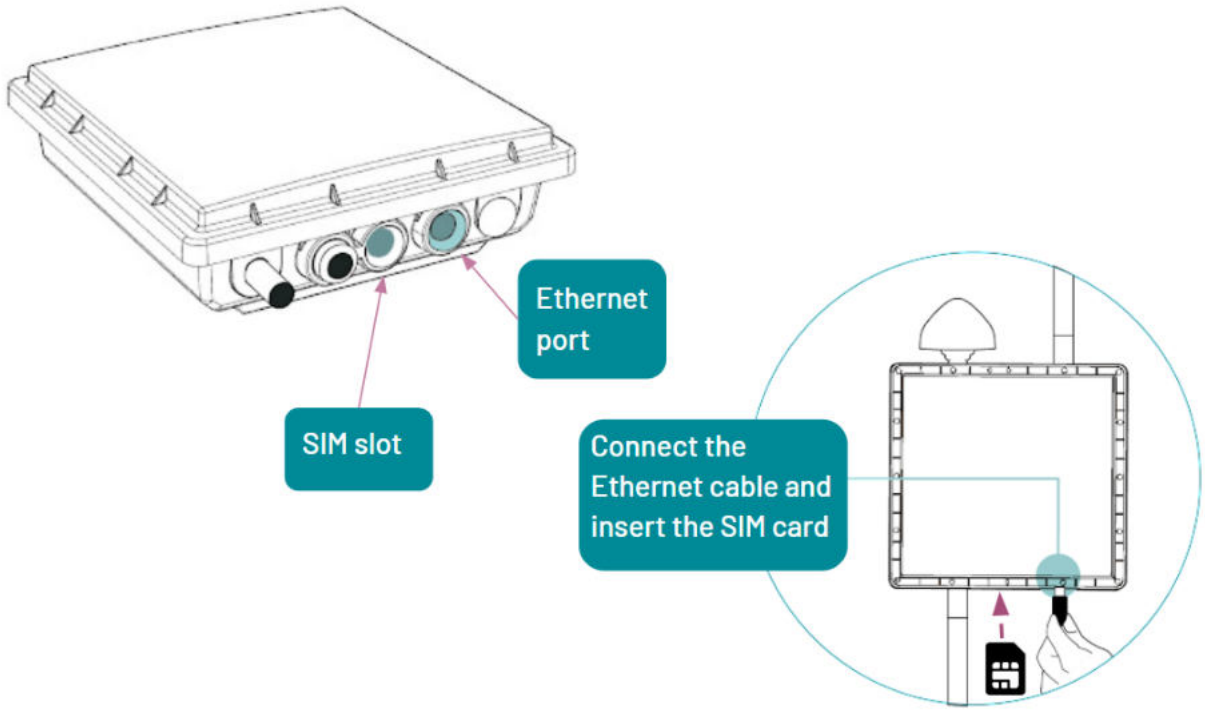

Figure 5.4-2: Connecting the shielded Cat 5e Ethernet cable and inserting the SIM card

The freeRAN™ LTE Base Station comes with a Power-Over-Ethernet (PoE) injector customized to the user specification during the ordering process. Once connected to power, the freeRAN™ LTE Base Station will attempt to connect to a network automatically. The unit can be reset by disconnecting and reconnecting the injector. This may be required should a connection error occur (as indicated by the green and white LEDs.)

To enable LTE backhaul, the user should insert a SIM card into the unit. Figure 5.4-2 shows the SIM card slot, along with the correct insertion direction.

6. Starting up

6.1. Network connectivity

After completing the installation process of the freeRAN™ LTE Base Station, it's crucial to conduct basic checks to confirm its connectivity to the local network and the internet. The following sections offer guidance on performing these checks.

Before shipment, users can request Ubiik engineers to configure the freeRAN™ LTE Base Station with a static IP address. By default, however, the freeRAN™ LTE Base Station is set up for DHCP. For the DHCP-configured version, the user's local network router should be configured to assign an IP to the freeRAN™ LTE Base Station via DHCP. To verify the IP address assigned to the freeRAN™ LTE Base Station via your router and DHCP, log into your router and check the IP assignment for the MAC address associated with your freeRAN™ LTE Base Station. The freeRAN™ LTE Base Station's MAC address label can be found on a label attached to the unit. If, for any reason, this MAC address is not available, please contact Ubiik Support.

To perform a basic connectivity check, observe the green and white status LEDs. These LEDs are positioned on the freeRAN™ LTE Base Station, as indicated in Figure 6.1-1.

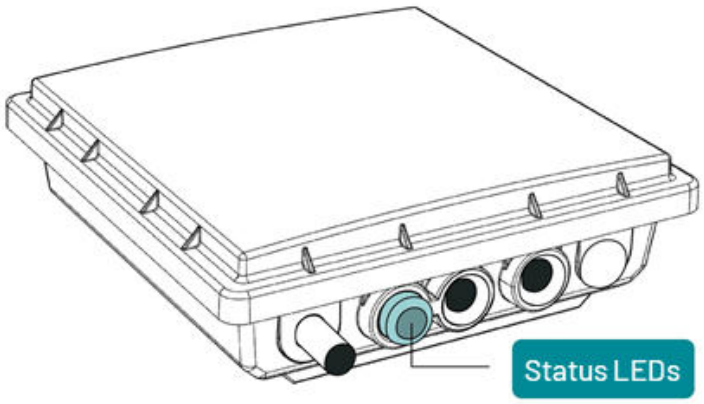

Figure 6.1-1: Location of the green and white status LED

Table 6.1 provides various states for the Status LED. There are two LEDs present, a white and a green. These LEDs, together, will be in one of four states. If the freeRAN™ LTE Base Station is operating correctly and the S1 interface is successfully established, the LEDs should be in a solid state. The LEDs should cycle through all other states to achieve this solid state. If for some reason, the last state is not reached, a problem exists.

Green LED	White LED	System Status
Off	Off	Power off, disconnected
Off	On	Power on, OS running
Flashing	On	Power on, system running
On (Solid)	On	Power on, system running and S1 interface is established

Table 6.1: LEDs and system status

After confirming that the freeRAN™ LTE Base Station is connected to the local network, the next step is to ensure it has Internet access. To do this, the user should establish an SSH connection to the unit from the computer using the following command, as demonstrated in Figure 6.1-2:

ssh -p 45296 guest@XXX.XXX.XXX.XXX

Make sure to replace XXX.XXX.XXX.XXX with the freeRAN's IP address. When prompted, enter the username guest and the password guest. Once the SSH connection is established, the user can verify Internet connectivity by performing a ping operation to Google's primary domain using the following command:

ping -c 4 8.8.8.8

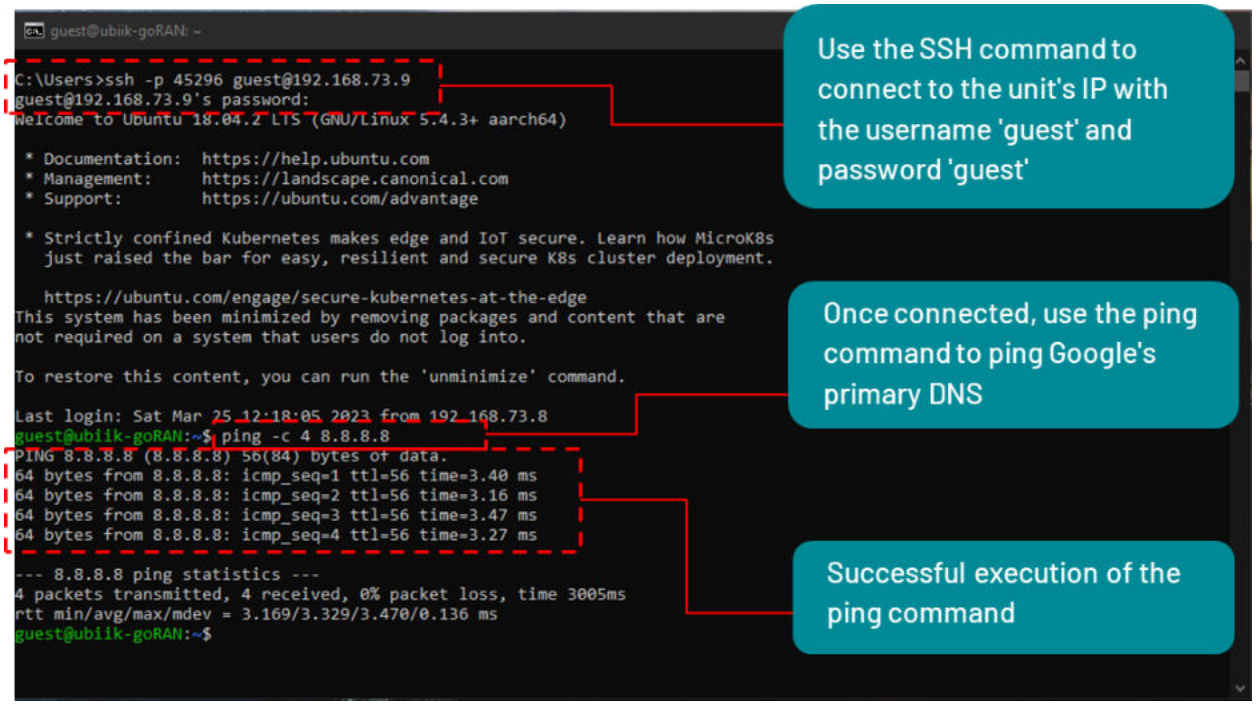

Figure 6.1-2: Pinging the Internet from the freeRAN™ LTE Base Station

6.2. Options

Table 6.2 showcases the available customizable options that come with the freeRAN™ LTE Base Station. The freeRAN™ LTE Base Station is pre-configured by Ubiik based on user-provided specifications and spectrum licensing requirements prior to delivery.

Options		Description	Sub-options
A	Backhaul	Configured for Ethernet or LTE backhaul	- Ethernet - LTE
B	Installation	Configured for various installation location types	- Mounting types - Cable types - Power supply types

Table 6.2: Options available for the freeRAN™ LTE Base Station, configured at time of ordering

WARNING!

The user is responsible for setting up the freeRAN™ LTE Base Station in a confined environment to validate spectrum configurations. It is the user's responsibility to ensure that regional spectrum licensing requirements are met during testing and installation.

6.3. UEs connection troubleshooting

This section addresses common issues related to the connection of UEs to the freeRAN™ LTE Base Station. It is important to note that the UE needs to be properly set up to establish a connection with the freeRAN™ LTE Base Station. Users can refer to the following key settings that should be configured on the UE side to ensure a successful connection.

1. APN (Access Point Name). By default, the freeRAN™ LTE Base Station supports three APNs:
    - ""(set empty string in UE for this APN) - APN for data service
    - "internet" - APN for data service
    - "ims" - APN for VoLTE service
2. Band. Users can refer to the AT command manual of the module used in their UE to learn how to set the band.
3. PLMN and network name. In some cases, UEs are configured to operate only with specific networks. To ensure compatibility with the freeRAN™ LTE Base Station, users can verify the PLMN and network name settings on their UE. They can do this by checking if the PLMN selection mode is set to automatic. Here is an example of such an AT command:
    AT+COPS? - this command checks the PLMN and network name settings.

+COPS: 0,0,"UBIIK" - in the module's reply, the first index "0" indicates that the network is set to automatic mode.

4. There are specific commands for the Cavli DDK (Device Development Kit) that the user needs to input in the Cavli DM terminal after upgrading the image:
    - ps nvm set ciotopt support_ue_opt 3 - This command sets CIoT EPS optimization function to “3: Both CP and UP CIoT opt.”
    - ps nvm set ciotopt pref_ue_opt 0 - This command sets CIoT EPS optimization preference to “0: No Preference.”

7. Network Management System (Ubiik BSMS)

7.1. BSMS overview

The BSMS (Base Station Management System) is a cloud-based management platform accessible to users from anywhere via a web browser. Alternatively, it can be deployed on the customer's infrastructure (on-premises). This system encompasses functions for fault management, configuration management, and accounting management. It empowers users to oversee and configure both individual freeRAN™ LTE Base Stations and entire networks comprising multiple units. The BSMS supports diverse aspects of freeRAN™ LTE Base Station management, including eNodeB monitoring and configuration, EPC management, alarm monitoring, SIM card provisioning, end-device monitoring, unit firmware upgrades, and more.

CAUTION!

The freeRAN™ LTE Base Station is configured during manufacturing, including parameters such as radio frequency and output power, in compliance with regulations specific to the territory where the base station is deployed. This pre-configured setup eliminates the need for additional configuration. However, this User Manual outlines the possibility of adjusting a wide range of technical parameters based on the hardware and software capabilities. It's important to note that not all parameters may be adjustable by the user, depending on the specific configuration limitations. An exception to this might be the freeRAN™ LTE Base Station provided for testing purposes. In any case, users must adhere to regional regulatory requirements during the configuration process. For further information, please contact Ubiik Support.

A user will have received login details for the BSMS with their freeRAN™ LTE Base Station package or via email after their purchase. After navigating to https://bsms.ubiik.com/, the user should be presented with a login screen as shown in Figure 7.1.

Figure 7.1: BSMS login portal

7.2. Base Station

7.2.1. eNodeB

One of the primary features of the freeRAN™ LTE Base Station is its eNodeB functionality, which essentially comprises RAN (Radio Access Network) operations. BSMS enables the configuration of each specific base station in the network, provides information about all base stations within the customer's network, and includes a firmware upgrade tool, as detailed in the following section.

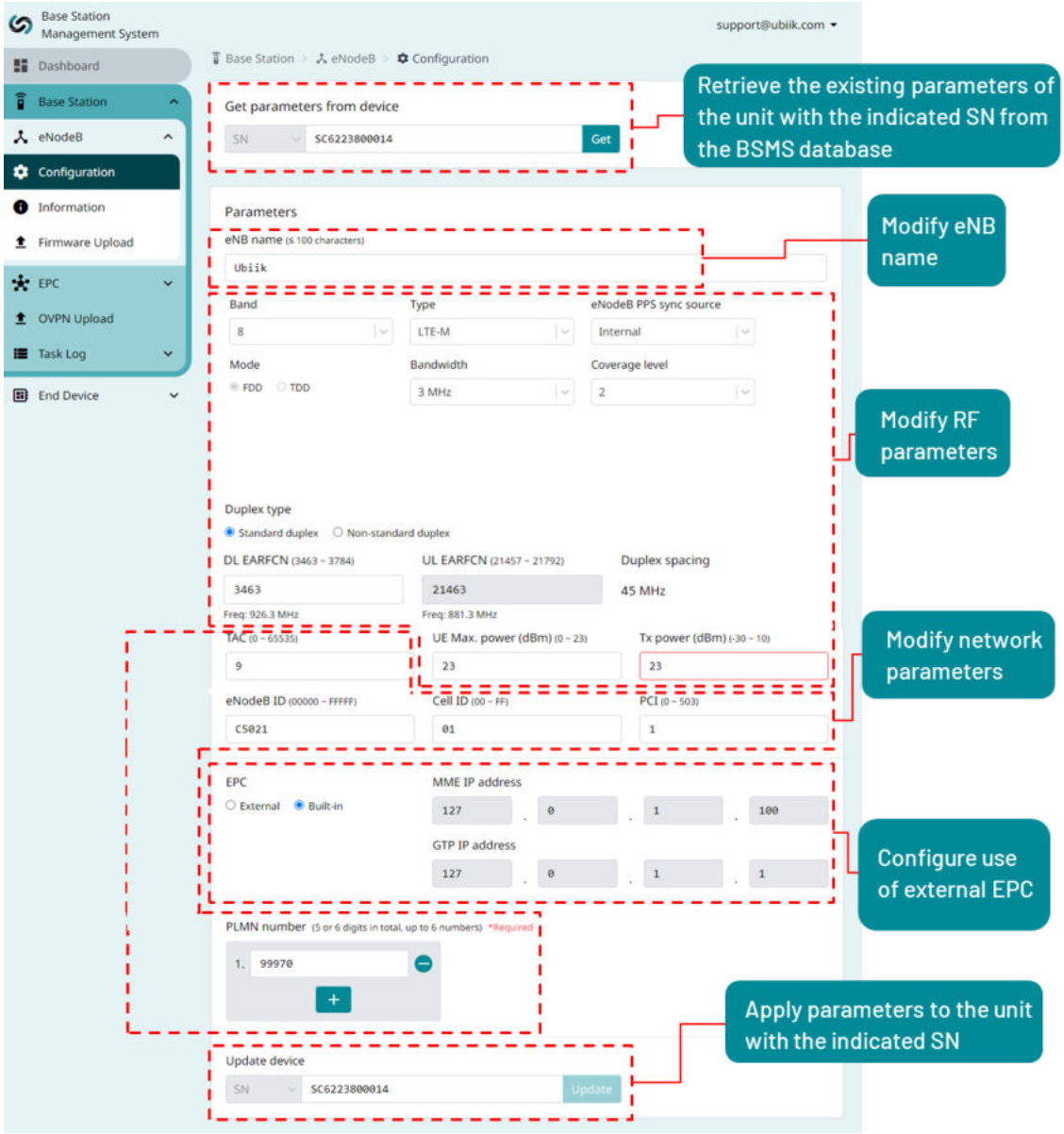

Figure 7.2.1-1: eNodeB Configuration page

The Configuration page allows for the simple configuration of parameters related to three main types: RF parameters, network parameters, and basic EPC settings. These parameters can be set by selecting the serial numbers of the freeRAN™ LTE Base Station, retrieving the configuration from the BSMS database, applying the changes to the database, and subsequently to the freeRAN™ LTE Base Station itself. To change the parameters, the user selects the SN (Serial Number) of the freeRAN™ LTE Base Station and retrieves the parameters to populate the GUI. Then the user can proceed to alter the RF and network parameters, and also choose the EPC mode, setting it to built-in EPC or external EPC. Figure 7.2.1-1 illustrates an example of the Configuration page settings.

The figures below illustrate the BSMS interface with a brief explanation of the meaning of all the parameters. Note that depending on the specific freeRAN™ LTE Base Station factory hardware configuration, some sub-options within a given parameter may or may not be accessible. The eNB name can be changed to a specific name for user convenience, particularly in scenarios of multiple deployments when numerous freeRAN™ LTE Base Stations are managed under a single BSMS account.

Figure 7.2.1-2 shows the RF parameters. Band and Bandwidth can be changed by users only for specific factory hardware configurations. Duplex communication mode (for uplink and downlink channels) can not be configured manually for either TDD or FDD because this parameter is pre-defined for specific bands.

Figure 7.2.1-2: RF parameters

In case of TDD band there are additional options available as shown in Figure 7.2.1-3 The TDD Frame Configuration and TDD Special Frame Configuration options allow to set up LTE TDD specific operational time periods.

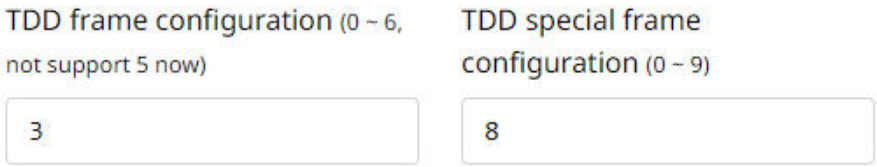

Figure 7.2.1-3: TDD Frame configuration

Coverage Level can be further used to provide coverage enhancement. To enable both coverage levels (1 and 2) users should choose option 2, and for enabling only one coverage level users should choose option 1. Note that this feature is not available for all radio technologies. For instance, LTE-M supports this feature, but LTE Cat-1 does not.

As shown on Figure 7.2.1-4, users can choose eNodeB PPS Sync Source. There are two sources of synchronization available: Internal and GPS. Note that GPS synchronization source should be chosen only in cases where antenna placement has been properly considered to allow for GPS signal access. Overwise, proper Base Station operation may not be guaranteed.

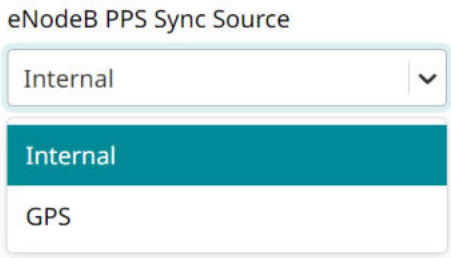

Figure 7.2.1-4: Synchronization source options

The user can also manually set up EARFCN values, for their chosen band, as shown in Figure 7.2.1-5. Depending on the freeRAN™ LTE Base Station's factory hardware capabilities, the user may choose to operate in either Standard Duplex or Non-Standard Duplex mode. Setting up Standard Duplex only requires setup of the DL EARFCN parameter. The second parameter, UL EARFCN, is set automatically to match standard LTE band settings. In the case of Non-Standard Duplex, users must set up both, DL EARFCN and UL EARFCN, parameters. The frequency values for the user's chosen EARFCN are shown below the text fields to help double check user selections. Note that for the TDD configuration, the duplex settings are not relevant as the same radio channels are used for both uplink and downlink.

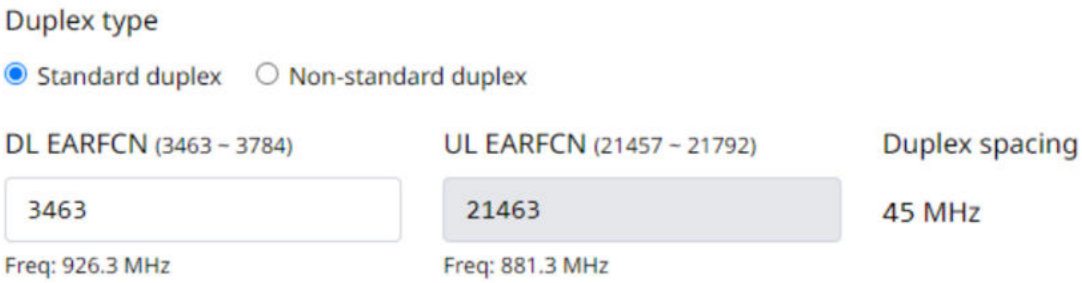

Figure 7.2.1-5: EARFCN configuration for Standard Duplex

The user can set the UE Max. power (dBm), which allows for limiting the maximum power of the devices if needed for specific IoT use cases. By default, the value is set in accordance with UE's power class 3 as specified by 3GPP, which is 23 dBm.

The user can adjust the output power of the base station's transmitter, which is configured in the Tx power (dBm) field. As shown in Figure 7.2.1-6, the value can range from -30 to 30 dBm. It's important to note that the Tx power may be subject to regulatory limits. For detailed information about a specific user base station, please contact Ubiik Support.

Figure 7.2.1-6: UE Max. power and Tx power

In Figure 7.2.1-7 below, eNodeB parameters are shown. TAC (Tracking Area Code) provides a location code within a given network. eNodeB ID, Cell ID and PCI are identifiers for each eNodeB within the network.

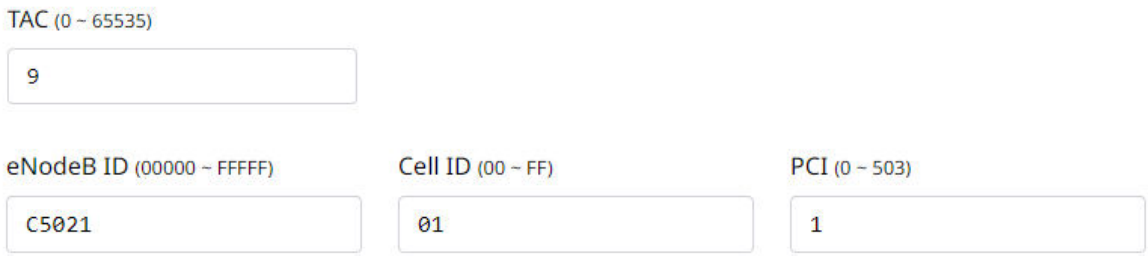

Figure 7.2.1-7: eNodeB parameters

The user can change the PLMN number (Public Land Mobile Network), which consists of the MCC (Mobile Country Code) and MNC (Mobile Network Code). The option to modify this code is shown in Figure 7.2.1-8. Note that the PLMN forms the first digits of the IMSI number.

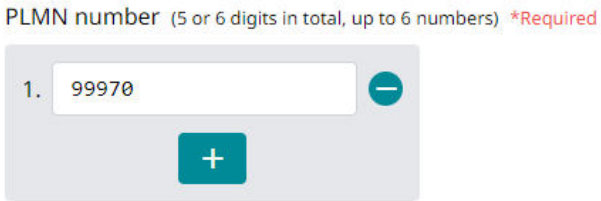

Figure 7.2.1-8: PLMN number

The freeRAN™ LTE Base Station is configured by default to operate with a built-in core. However, there are use cases where the user may prefer to connect the freeRAN™ LTE Base Station to an external EPC instead of using the default internal one. In such cases, the user needs to choose the External option, as shown in Figure 7.2.1-9, and set the EPC option, which includes the MME IP address and GTP IP address. Note that the MME IP address refers to the

IP address of the S1 interface on the EPC, while the GTP IP address is the IP address obtained by the freeRAN™ LTE Base Station.

Figure 7.2.1-9: Basic EPC settings

Once the parameters have been modified, the user can apply them by clicking the Update button as shown in Figure 7.2.1-10. Note that it may take up to 60 seconds for the updated configuration to be received by the freeRAN™ LTE Base Station.

Figure 7.2.1-10: Applying parameters to freeRAN™ LTE Base Station

7.2.2. EPC

One more primary feature of the freeRAN™ LTE Base Station is EPC (Evolved Packet Core) functionality. BSMS allows the user to:

- Set the network name and PLMN.
- Configure power-saving features such as PSM and eDRX for UEs.
- Set up an external HSS (Home Subscriber Server).
- Configure the PDN (Packet Data Network) settings.
- Provision the SIM cards.

The example of the Configuration page is shown in Figure 7.2.2-1 below. The following figures illustrate the BSMS interface with a brief explanation of the meaning of all the parameters.

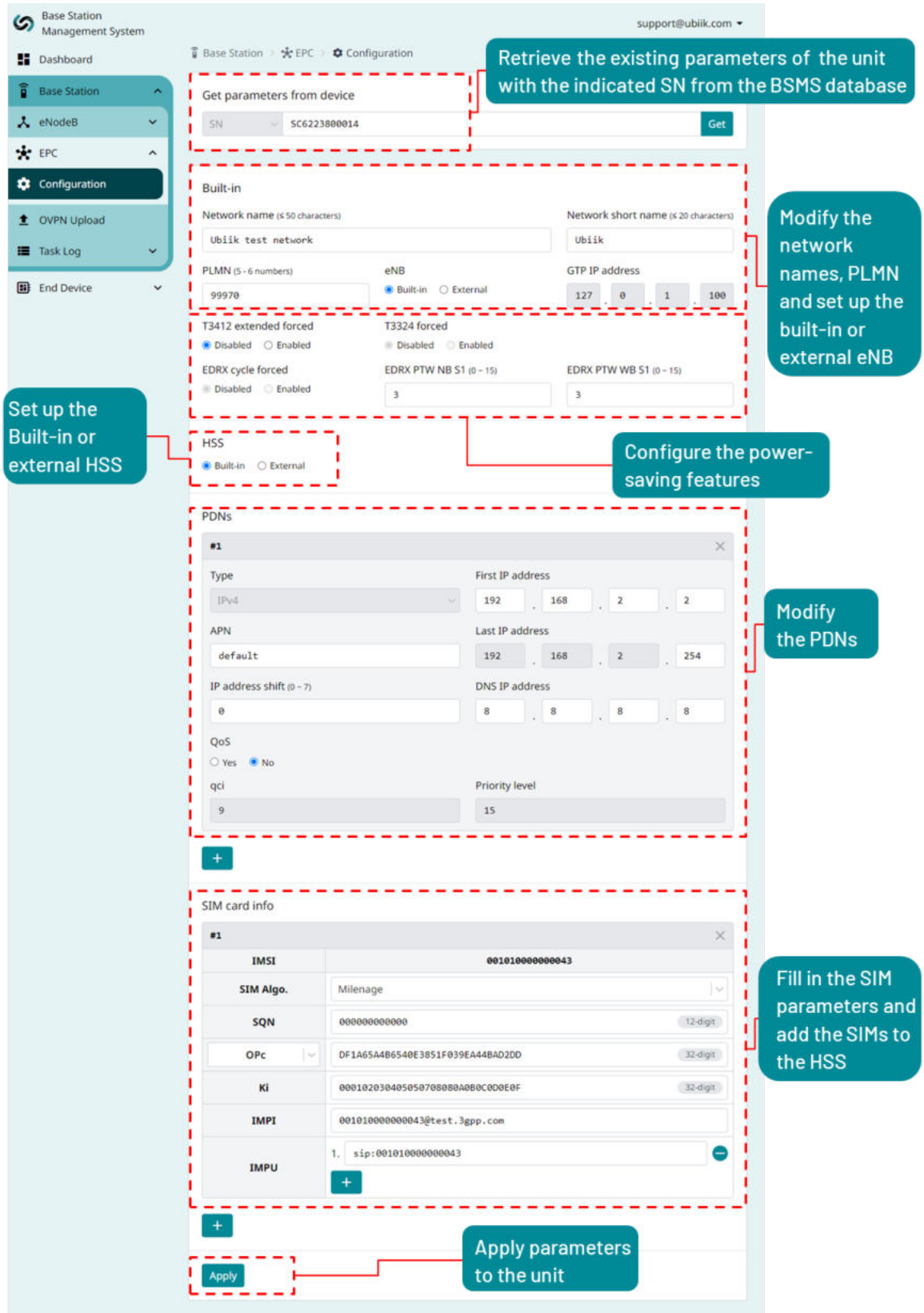

Figure 7.2.2-1: EPC Configuration page

After entering the SN (Serial Number) of the freeRAN™ LTE Base Station and retrieving the EPC configuration, it is possible to modify the EPC parameters using the options displayed in the figures below. Note that depending on the specific hardware configuration of the freeRAN™ LTE Base Station, certain sub-options within a given parameter may or may not be accessible.

Figure 7.2.2-2 shows the network name settings. The Network name serves as a descriptive name for the network and can include a combination of alphanumeric characters, as well as the network operator's brand name or any other identifier chosen by the user. The Network short name, on the other hand, is a shorter version of the network name. The network names, including the Network name and Network short name, serve as additional identifiers to the PLMN identifier and can be displayed on user equipment.

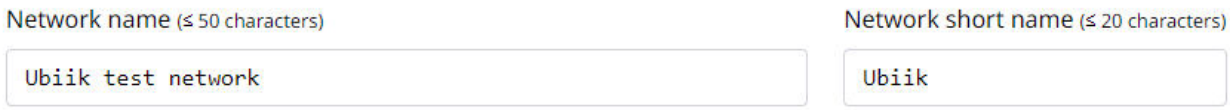

Figure 7.2.2-2: Network Name

The user can configure the PLMN number, as depicted in Figure 7.2.2-3. As per the standard, this number should also be set on the EPC and match the number on the eNodeB side. By default, the freeRAN™ LTE Base Station employs the internal eNodeB. However, it's possible to connect an external eNodeB to the built-in freeRAN™ EPC. To do this, the user needs to switch the eNB to External mode and configure the GDP IP address, which corresponds to the IP address of the external eNodeB.

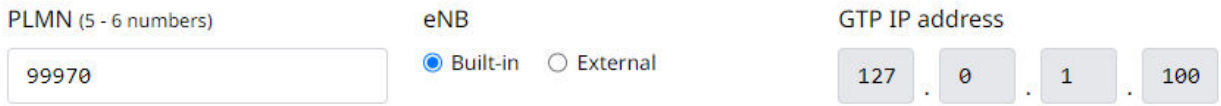

Figure 7.2.2-3: PLMN and Built-in/External eNB settings

The user can configure specific power-saving features: PSM (Power Saving Mode) and eDRX (Extended Discontinuous Reception), as shown in Figure 7.2.2-4. By default, the features T3412 extended forced, T3324 forced, and EDRX cycle forced are Disabled. This signifies that UEs can determine the timers on their own, and these timers will be accepted by the freeRAN™ LTE Base Station. If the user switches these timers to Enabled, the values of the timers will be defined by the freeRAN™ LTE Base Station, and UEs won't be able to change them. To set the PSM feature, two timers need to be configured. The first one is the T3412 extended forced timer, which determines the duration of the device's sleep mode. The second one is the T3324 forced timer, also known as the active timer, which specifies the duration during which the device remains active and can receive paging and user data from the network. Note that the units to be input in these fields should be in seconds.

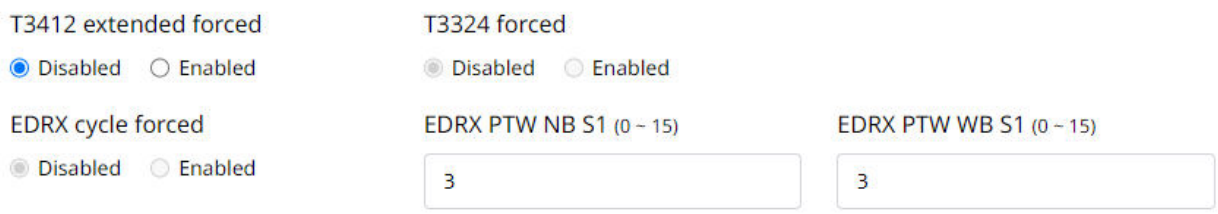

Figure 7.2.2-4: PSM and eDRX settings

To set the eDRX feature, the user needs to configure the EDRX cycle forced timer, which determines the time period after which the device becomes active. Additionally, the user needs to set the eDRX PTW (Packet Transmission Window) timer, which indicates the duration when the device's receiver is enabled and the device is available for paging and incoming data. The eDRX PTW timer has two options: EDRX PTW NB S1, specifically used for NB-IoT radio technology, and EDRX PTW WB S1, specifically used for LTE-M radio technology. The values to be entered in these fields are the numbers of the timers, as specified in 3GPP TS 24.008 Table 10.5.5.32. Note that for LTE Cat-1 configuration, the PSM and eDRX features are not applicable.

The user has the option to configure the setup with an external HSS. In this scenario, the internal freeRAN™ EPC handles the UE authentication procedure with the external HSS. An example of this configuration is illustrated in Figure 7.2.2-5. The HSS IPv4 address represents the IP address of the HSS endpoint. The S6 Bind IPv4 address pertains to the freeRAN™ IP address. The Origin realm and Origin host are additional parameters employed in communications through the S6 interface using the Diameter protocol.

Figure 7.2.2-5: External HSS settings

The user can modify existing PDNs settings or add a new PDN set, as shown in Figure 7.2.2-6. Each PDN includes a group of parameters such as First IP address, Last IP address, DNS IP address and APN. The UE can choose a specific PDN with a corresponding APN in the network request. For each PDN, there is a specific QoS (Quality of Service) functionality available, which can be enabled by selecting Yes on the right side of the settings bar. QoS

includes two parameters: qci (QoS Class Identifier) and Priority level. A detailed description of these parameters is beyond the scope of this document, but they allow for flexible and advanced configuration by experienced users. To add a new PDN, the user needs to click on the + button.

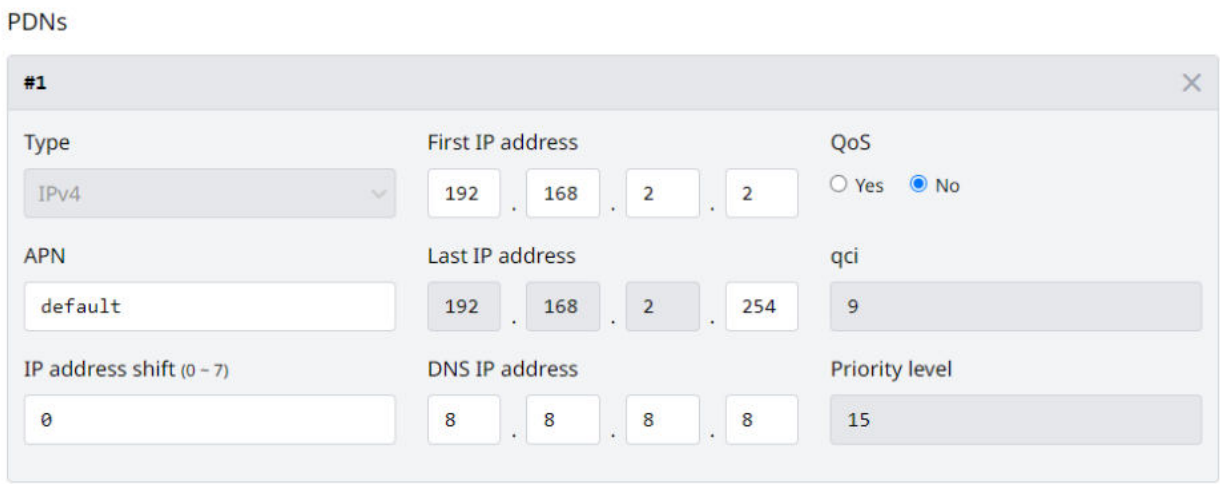

Figure 7.2.2-6: PDNs settings

The freeRAN™ LTE Base Station can be shipped with pre-provisioned SIM cards, in which case all assigned SIM cards are automatically added to the internal HSS. However, if the user needs to add new devices to the network, SIM provisioning actions must be performed.

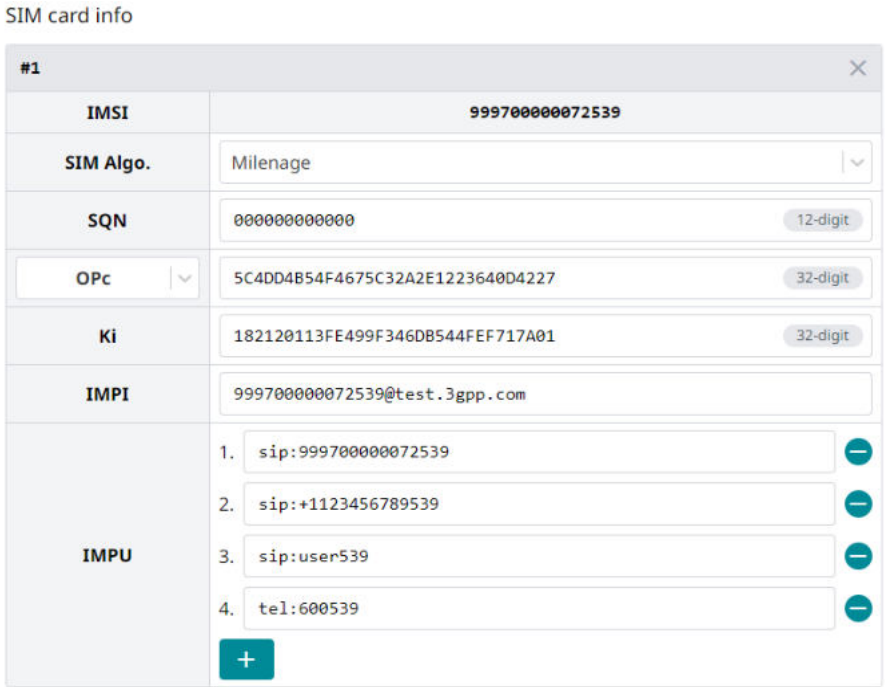

Figure 7.2.2-7: SIM parameters

As depicted in Figure 7.2.2-7, to add a new SIM, several fields for SIM identifiers and secret keys need to be filled in. Note that SIM parameters and secret keys are essential for identification and encryption purposes, and they should not be made available to third parties.

After making all the necessary updates on the Configuration page, the user should click the Apply button located at the bottom left side of the page to save the new configuration in the BSMS database. Note that it may take up to 60 seconds for the updated configuration to be received by the freeRAN™ LTE Base Station.

7.2.3. OVPN Upload

OpenVPN is a virtual private network system that can be employed to establish secure connections through the Internet. BSMS offers users a convenient method for applying OVPN files to the freeRAN™ LTE Base Station. Similar to other pages, the initial step on the OVPN Upload page involves entering the SN in the designated field and clicking on Get. After completing this step, the user can view the existing OVPN file if it was added previously. Subsequently, the user has the option to upload a new OVPN file or replace the existing one, either by clicking or through drag and drop, as depicted in Figure 7.2.3. Note that once the upload is completed, the user should wait for 60 seconds for the settings to be applied.

Figure 7.2.3: OVPN file uploading

7.2.4. Task Log

The BSMS provides three types of logs: Configuration update logs, OVPN Upload logs, and FOTA logs. Configuration update logs capture changes made to the eNodeB and EPC configurations. OVPN Upload logs record activities related to OVPN file uploads. FOTA logs document events associated with unit firmware upgrades.

Configuration

This section contains a log of all configuration updates made by users in the eNodeB Configuration and EPC Configuration sections. An example of these logs is shown in Figure 7.2.4-1 below. The log includes the event ID, SN (Serial Number), Type of configuration change (eNB or EPC), Start time and Finish time, event State, and User (the user's email address) responsible for the configuration change. The event State can be 'Done' if the configuration is successfully applied or 'Failed' if the update is unsuccessful. In the case of a 'Failed' event, users can contact Ubiik Support for configuration verification. Note that to access events for a specific unit, users should enter the SN, specify a time period for log retrieval, define the event State, and then click the Search button.

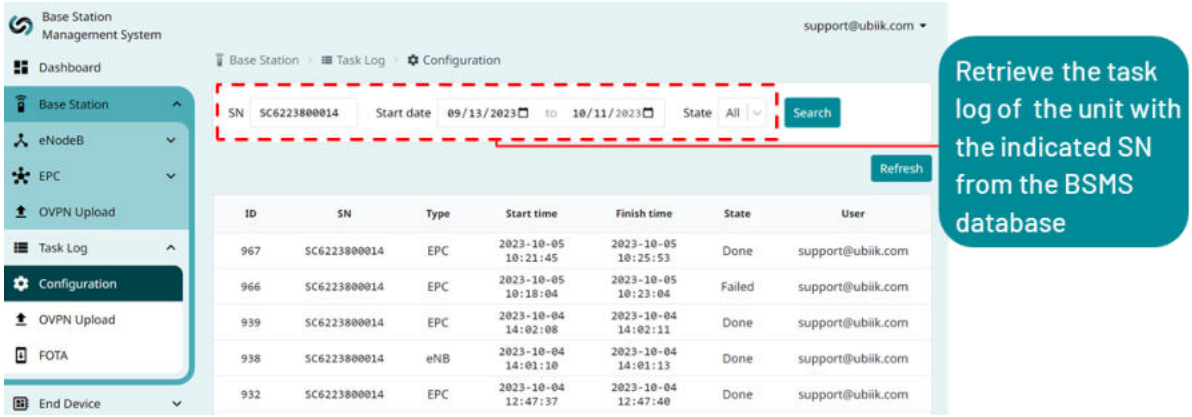

Figure 7.2.4-1: Task Log: Configuration

OVPN Upload

The OVPN Upload page stores records related to updates of the OVPN (OpenVPN) files. The log consists of the same fields as those found in the Configuration section, with the addition of one extra field - Filename, which corresponds to the name of the uploaded OVPN file, as displayed in Figure 7.2.4-2.

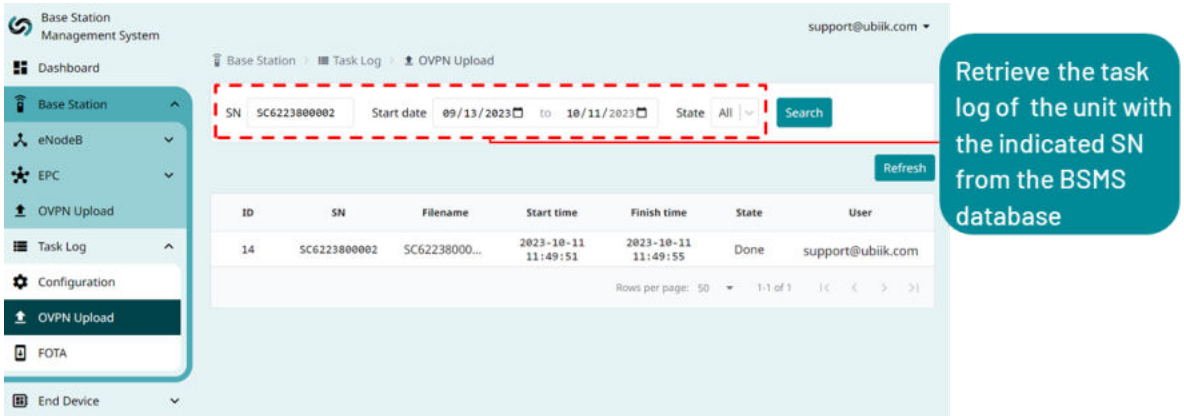

Figure 7.2.4-2: Task Log: OVPN Upload

FOTA

This section comprises logs of events linked to unit firmware upgrades. Similar to the OVPN Upload page, the FOTA (Firmware Over-The-Air) page includes the Filename field, but in this context, the field pertains to the firmware upgrade file name, as depicted in Figure 7.2.4-3.

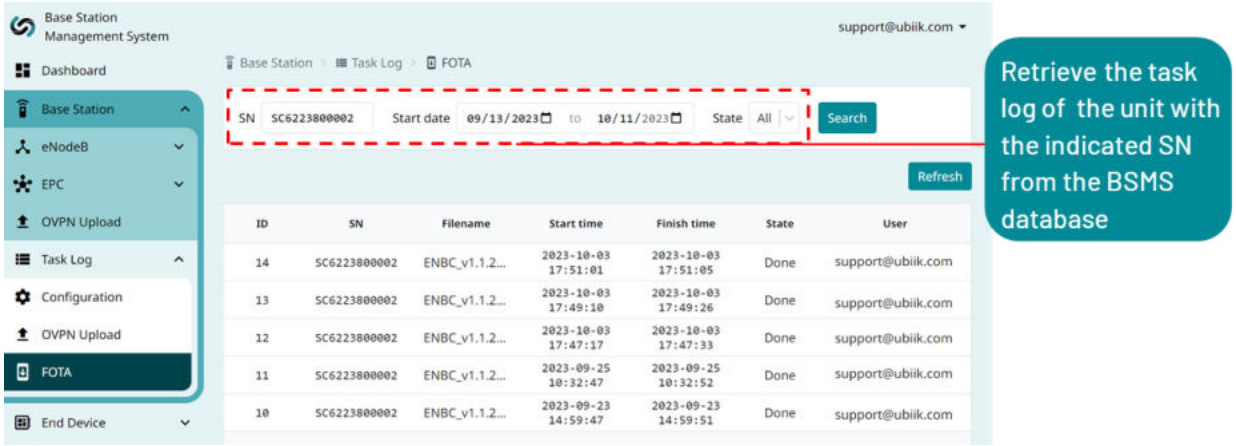

Figure 7.2.4-3: Task Log: FOTA

7.3. End Device

The End Device page is designed for monitoring the status of UEs, which are essentially end devices. This page provides two options for searching:

- Search by BS SN (Base Station Serial Number). The user can select a specific freeRAN™ LTE Base Station by its serial number to access information about the UEs provisioned on that particular unit.
- Search by IMSI. The user can choose an IMSI to retrieve detailed information about a specific UE.

For each UE, the user can access the following parameters: IMSI number, IMEI number, Status, Last Update Time (indicating the time of the last UE activity), IP address assigned to the UE, and the APN used by the UE. The UE's Status can be one of the following: Registered, indicating that the UE is currently attached to the freeRAN™ LTE Base Station's EPC, or Unregistered, signifying that the UE is not currently attached to the EPC. Note that the IP address and APN are displayed only for UEs that have activated the PDN.

8. Admin Config Tool (ACT) software

The Admin Config Tool (ACT) is a software deployed on the local network where the freeRAN™ LTE Base Station is located. It offers configuration and status information, enabling users to adjust the eNodeB output power, check the status of devices registered with the freeRAN™ LTE Base Station, and download logs. To access the ACT tool, users can visit www.ubiik.com/downloads.

8.1. Installation

The ACT operates using Java with JDK version 17 or higher. Before launching ACT, users should ensure that JDK is present on the operating system. Installation instructions for both Windows and Linux operating systems are provided below.

Windows:

1. Download and extract the ZIP file provided at https://www.ubiik.com/downloads for the Admin Config Tool.
2. Open the folder and execute the run.bat file by double clicking.

Linux:

1. Download and extract the ZIP file provided at https://www.ubiik.com/downloads for the freeRAN™ Admin Config Tool.
2. Open a bash terminal and navigate to the root folder of the extracted ZIP file.
3. Change file permissions for the run.sh shell script for execution: chmod +x run.sh
4. Run the shell script as super user: sudo ./run.sh

8.2. Management

Once installed, the ACT provides a way to connect to the IP of a specific freeRAN™ LTE Base Station unit on a user's local network, as shown in Figure 8.2-1. Once connected, three sections are accessible: EPC UEs, Configuration, and Settings.

The Configuration page is the first one displayed. Here, the freeRAN™ LTE Base Station can be remotely restarted using the Restart button, as seen in Figure 8.2-2. The Base Station field provides the ID number of the freeRAN™ LTE Base Station, and the ENB Controller Version shows the version of the freeRAN™ LTE Base Station's software. Another information field is ENB MODE, which indicates the current mode (LTE-M, NB-IoT, or LTE Cat-1) of the freeRAN™ LTE Base Station. The unit's power level can be adjusted via the ENB TX PWR field. Users can input an integer in dBm, ranging from -68 to 10 or from -68 to 30, depending on the unit's configuration.

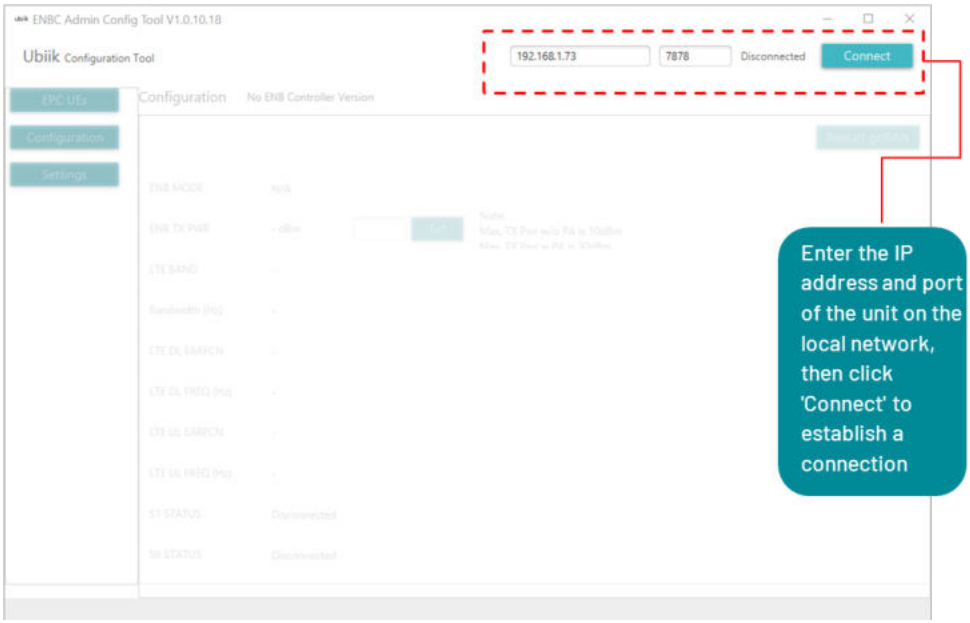

Figure 8.2-1: ACT connection to the freeRAN™ LTE Base Station

Users can access various parameters related to the operating frequency of the freeRAN™ LTE Base Station. These parameters include LTE BAND, which corresponds to the frequency number according to the 3GPP standard, Bandwidth, UL EARFCN, and DL EARFCN indicating frequency channel numbers, as well as LTE DL FREQ and LTE UL FREQ, denoting frequencies in Hz. Additionally, users can verify the status of S1 and S6 connections using the S1 STATUS and S6 STATUS fields, respectively. This verification is crucial when using configurations with external EPC or external HSS.

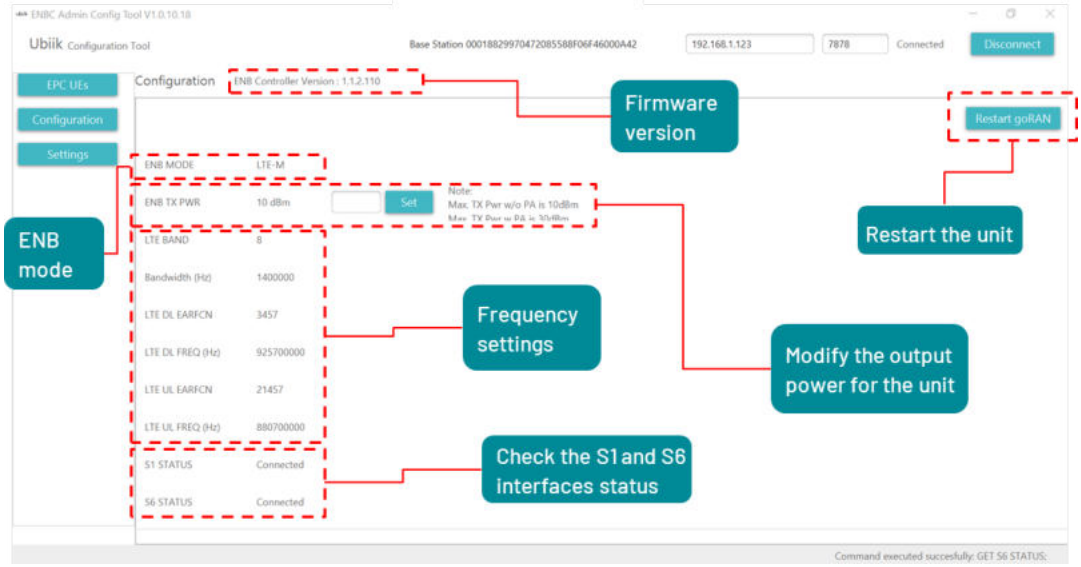

Figure 8.2-2: Configuration page

The status of the UEs registered to the freeRAN™ LTE Base Station's EPC can be monitored via the EPC UEs page, as shown in Figure 8.2-3. The EPC UEs page displays the UE IMSI and Status for each UE attached to the EPC. The Status shows Registered if the UE is currently attached to the EPC. The status changes to Unregistered if the UE performs the detach procedure. Note that after powering off the UE without performing the detach procedure, the status will remain as Registered until the next TAU procedure is missed by the UE. The TAU period is defined by the freeRAN™ LTE Base Station's settings, typically 30 minutes. Note that other fields are currently under development.

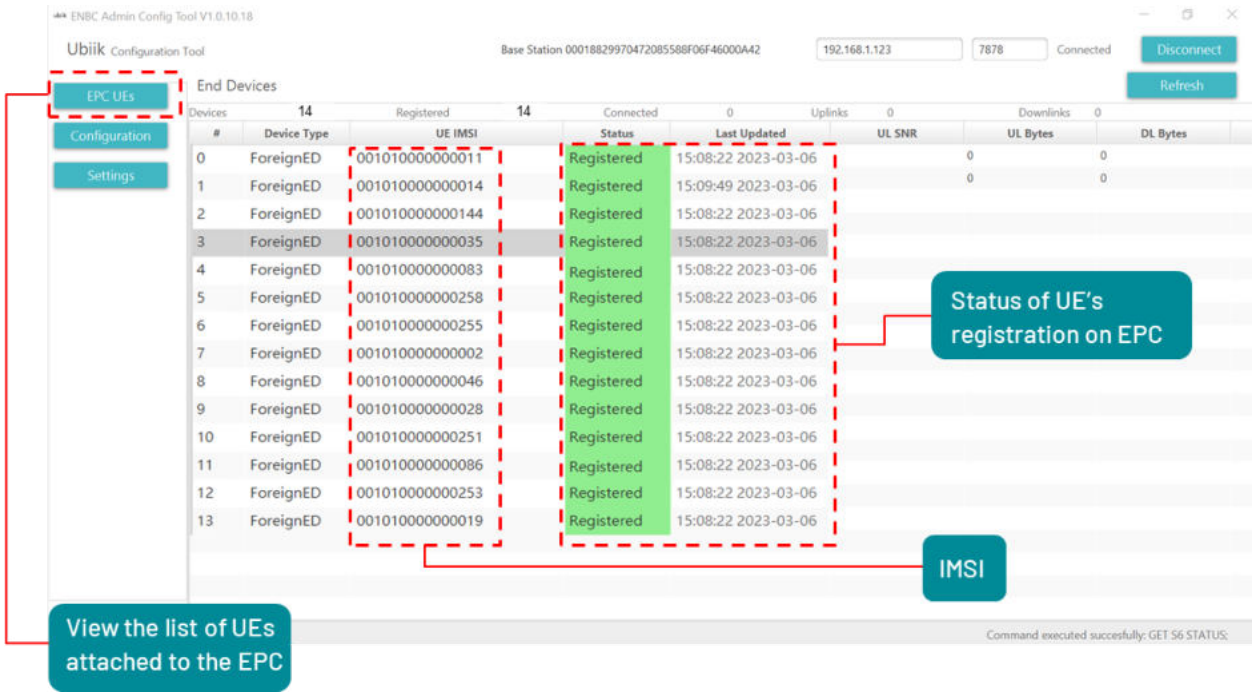

Figure 8.2-3: EPC UEs page

The user can download the logs from eNodeB and EPC. Figure 8.2-4 demonstrates an example of the Settings page. As a first step, it is needed to click the Select Folder button and select the folder on the local PC for logs downloading. In the second step, the user clicks the Download Logs button which initiates the download process from the freeRAN™ LTE Base Station to the local folder. When accessing the folder, the user will encounter two text files. One of these is the ENB log file, which includes service messages generated by the eNodeB and is related to the RAN (Radio Access Network). This log is particularly useful for troubleshooting at the radio access level, addressing issues like RRC connection-related matters. The second file is the MME log file, containing service messages from the EPC. This log is essential for troubleshooting at a higher level, addressing matters such as attach procedure-related issues. Note that users can contact Ubiik Support for log descriptions.

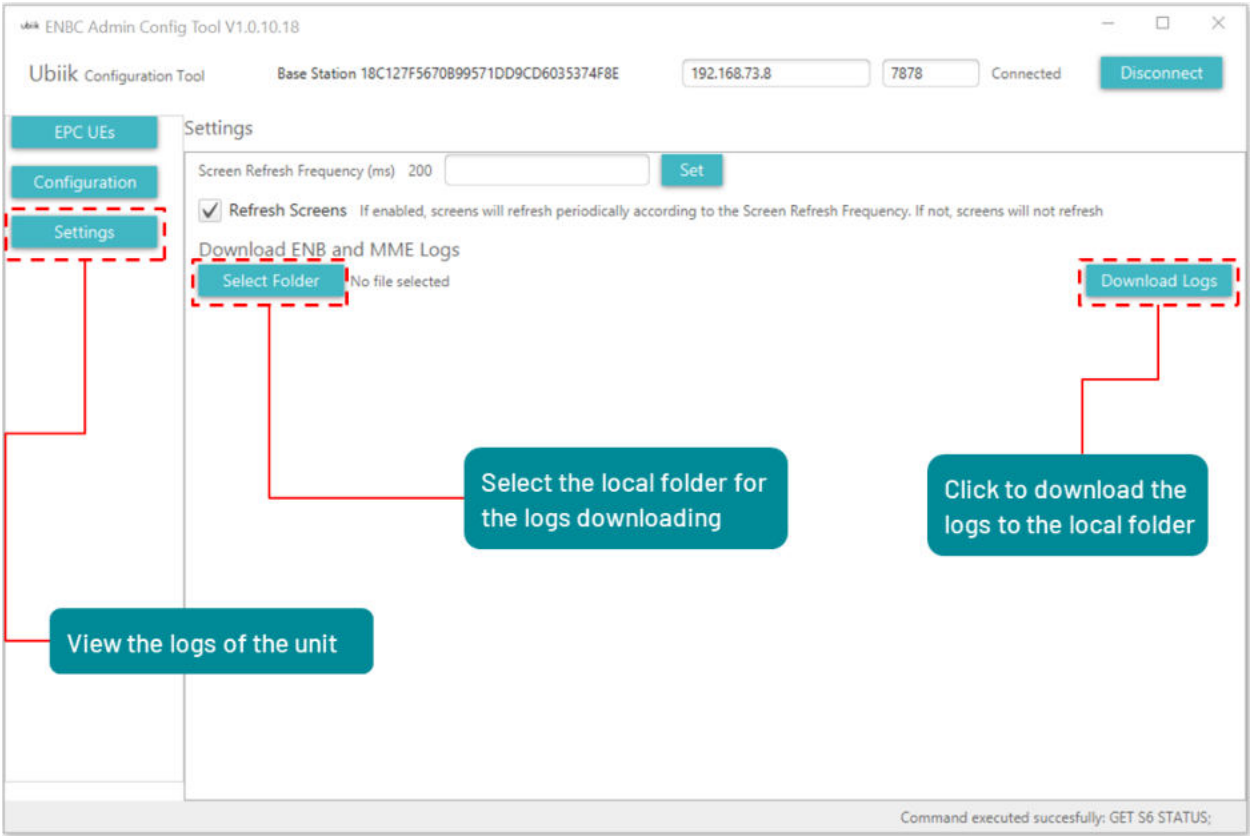

Figure 8.2-4: Settings page

9. Specifications

9.1. System specification

Performance	OFDMA 16 QAM (downlink), SC-FDMA 16 QAM (uplink) SDR-based (Linux/ARMv8-A)
Bandwidth	3MHz and 1.4MHz (FDD)
Memory	8GB eMMC flash and 2GB DDR4 RAM
Frequency Bands	3 MHz bandwidth: 902 MHz to 928 MHz (UL: 902-915 MHz, DL: 924.8-927.8 MHz), 1.4 MHz bandwidth: 902 MHz to 928 MHz (UL: 902-915 MHz, DL: 924.8-927.8 MHz), FCC Part 15.247
TxPower	30 dBm maximum
Timing/ frequency acquisition	GPS, 1588v2 PTP
GPS antenna peak gain	5 dBi
RF antenna peak gain	Antenna in box C1991-690054-A: 2.65 dBi Antenna optional C1991-690053-A: 1.2 dBi Antenna optional DS0915-0726WNM: 4.69 dBi Antenna optional DS0915-0727WNM: 3.07 dBi
Backhaul antenna peak gain	1.8 dBi (band 2), 0.6 dBi (band 4), 1.4 dBi (band 13)
Backhaul	Ethernet (10/100/1000 Mbps) LTE Cat-4, LTE Cat-1
LED Indication	1 x System Power 1 x Network Connection Status (Ethernet or LTE)
I/O Interfaces	3 x external antennas for GPS, RF and LTE Cat-1 backhaul 1 x Gigabit Ethernet port, LAN/WAN and Power-Over-Ethernet (PoE) (Shared the same I/O port) 1 x Reset button 1 x USIM slot 1 x Micro SD slot
Physical and environmental	Dimensions: 10” × 10” x 3.28” Operating temperature: -40° to 131°F Storage temperature: -40° to 158°F

	Operating humidity: 5% to 90% non-condensing Ingress protection rating: IP67

9.2. Features

As a release 14/15 3GPP compliant system, the freeRAN™ LTE Base Station's supported feature list is extensive. However, some key features may be of interest for users. Some of these are presented below. The next sections discuss some key features as shown in Table 7.2 below.

Ref	Feature
1	Power Saving Mode (PSM)
2	Extended Discontinuous Reception (eDRX)
3	Coverage Enhancement (CE)
4	Early Data Transmission (EDT)
5	Release Assistance Indication (RAI)
6	Voice Over LTE (VoLTE)

Table 7.2: The freeRAN™ LTE Base Station features

1. PSM is designed to help UE conserve battery power. If the device's application turns its radio module off to conserve battery power, the device would subsequently have to reattach to the network when the radio module was turned back on. The cumulative energy consumption of reattaches can become significant over the lifetime of a device. PSM allows the devices to go into sleep mode. As a result, the device can save battery current drain and drop power consumption into the micro-Ampere range by disabling parts of the chipset protocol stack and decreasing device-to-network signaling while remaining registered with the network.

2. eDRX is an extension of an existing LTE feature, which can be used by UE to reduce power consumption. eDRX has been designed for downlink-centric applications that usually receive rather than send data. For such applications, the device wakes up from it's momentary slumber and listens to the network at regular intervals for any incoming data. eDRX allows the time interval during which a device is not listening to the network to be greatly extended, thus strongly reducing the power consumption of the device while remaining reachable from the network. Although it does not provide the same level of power reduction as PSM, eDRX provides a good compromise between device reachability and power consumption.

3. Coverage Enhancement (CE). Some IoT applications require devices to be positioned in areas not readily accessible by radio coverage, such as underground parking garages and in ground pits. Coverage Enhancement feature increases the depth and breadth of radio coverage to enable IoT devices to operate in locations that would otherwise not be possible. This feature increases the power levels of signaling channels together with the ability to repeat transmissions. Repeated transmission improves the ability of receivers to correctly resolve the message sent. LTE-M CE Mode A standard supports CE Levels 0 & 1. This CE feature essentially increases maximum coupling loss by approximately up to +5dB. NB-IoT standard supports 3 CE Levels, and increases the maximum coupling loss (MCL) from 144dB to 164dB: 1. +0dB vs. GSM signal with CE Level 0; 2. up to +10dB with CE Level 1; 3. up to +20dB with CE Level 2.

4. Early Data Transmission (EDT). This 3GPP Release 15 feature allows an idle mode UE/devices to transmit data in Msg3 of the random-access procedure, carrying between 328 and 1000 bits. After successful reception by base station, the random-access procedure terminates, and the UE does not transition to connected mode.

5. Release Assistance Indication (RAI). When UE has no more data to transmit, they wait for the network to release the connection to enter Idle mode. RAI was introduced in order for the network to release the UE to idle mode quickly to save power. The UE may include RAI in non-access stratum (NAS) signaling to indicate that after that uplink data transmission, no further uplink or downlink data transmission is expected or that only a single downlink data transmission is expected, thus helping the network to decide if the connection can be released.

6. This feature introduces the capability of LTE Cat-1 and LTE-M to support voice services. The user equipment (UE) can now initiate and receive voice calls. This enhancement is particularly beneficial for various IoT applications, including devices with emergency call functions such as personal trackers, as well as for phones where voice is the primary function.

Appendix A Terminology abbreviations

Abbreviation	Description
3GPP	The 3rd Generation Partnership Project
ACT	Admin Config. Tool
APN	Access Point Name
BPSK	Binary Phase-Shift Keying
BSMS	Base Station Management System
Cat-M1	Category M1 LTE-M
Cat-NB1/NB2	Category Narrowband1/Narrowband2
CE	Coverage Enhancement
dBi	Decibel Isotropic
dBm	Decibel Milliwatts
DDR4 RAM	Double Data Rate 4 Random-Access Memory
DHCP	Dynamic Host Configuration Protocol
DL	Downlink
DNS	Domain Name System
DoNAS	Data Over NAS (Non-Access Stratum)
EARFCN	E-UTRA Absolute Radio Frequency Channel Number
eDRX	Extended Discontinuous Reception
EDT	Early Data Transmission
eMMC	Embedded MultiMediaCard
eNB	eNodeB (Evolved Node B)
EPC	Evolved Packet Core
E-UTRA	Evolved UMTS Terrestrial Radio Access
EVK	Evaluation Kit
FCC	Federal Communications Commission
FOTA	Firmware Over-The-Air

Abbreviation	Description
GPS	Global Positioning System
GPRS	General Packet Radio Services
GTP	GPRS Tunnelling Protocol
GUI	Graphical User Interface
HARQ	Hybrid Automatic Repeat Request
HSS	Home Subscriber Server
IMEI	International Mobile Equipment Identity
IMS	IP Multimedia Subsystem
IMSI	International Mobile Subscriber Identity
IoT	Internet of Things
IP	Internet Protocol
IP67	International Protection 67
LAN	Local Area Network
JDK	Java Development Kit
LED	Light Emitting Diode
LPWAN	Low-Power, Wide-Area Network
LTE	Long-Term Evolution
LTE Cat 1	LTE Category 1
LTE-M	Long-Term Evolution Machine Type Communication
M2M	Machine-to-Machine
MAC	Media Access Control address
MCC	Mobile Country Code
MME	Mobility Management Entity
MNC	Mobile Network Code
MNO	Mobile Network Operator
mPOS	Mobile Point-Of-Sale
MVNO	Mobile Virtual Network Operator

Abbreviation	Description
NB-IoT	Narrowband Internet of Things
NIDD	Non-IP Data Delivery
OFDMA	Orthogonal Frequency-Division Multiple Access
OS	Operating system
PBX	Private Branch Exchange
PCI	Physical Cell Identity
PDN	Packet Data Network
PHS	Personal Handy Phone
PLMN	Public Land Mobile Network
pLTE	Private Long-Term Evolution network
PSM	Power Saving Mode
PoE	Power over Ethernet
PPS	Pulse Per Second
PTW	Packet Transmission Window
QoS	Quality of Service
QPSK	Quadrature Phase Shift Keying
RAI	Release Assistance Indication
RF	Radio Frequency
RLC	Radio Link Control
SC-FDMA	Single-Carrier Frequency-Division Multiple Access
SDR	Software-Defined Radio
SIM	Subscriber Identity Module
SSH	Secure Socket Shell protocol
sXGP	Shared Extended Global Platform
S/N	Serial Number
T3324	Active Timer
T3412	Periodic Tracking Area Update timer

Abbreviation	Description
TAC	Tracking Area Code
TAU	Tracking Area Update
TBS	Transport Block Size
UDP	User Datagram Protocol
UE	User Equipment
UL	Uplink
UMTS	Universal Mobile Telecommunications Service
VoLTE	Voice over LTE
WAN	Wide Area Network

Revision history

Revision	Date	Description
1.0	October 2023	Initial release

Contact

For further support and contact information, visit us at www.ubiik.com
19F, No. 17, Sec. 1, Chengde Rd., Datong Dist., Taipei City 103, Taiwan
+886-2-7751-5855

support@ubiik.com