6th December 2021

Sigfox Connected Seal

Datasheet

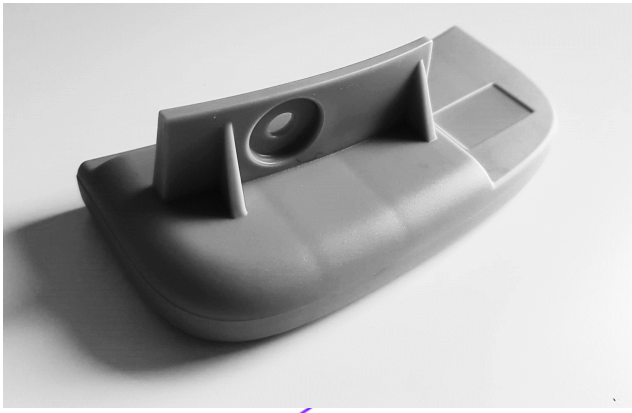

Version 1.0

Confidential

Revision History

Rev.	Authors	Comments
1.0	Cyril Jouanlanne	Version 1.0

NOTICE: The contents of this document are proprietary of SIGFOX FRANCE and shall not be disclosed, disseminated, copied, or used except for purposes expressly authorized in writing by SIGFOX France

© Copyright SIGFOX FRANCE. Confidential. All rights reserved

SIGFOX FRANCE- R.C.S. TOULOUSE 824 211 908
425, rue Jean Rostand - 31670 Labège FRANCE

Table of contents

1 Introduction 3
2 Product features and assembly description 3
3 HW specifications 4
4 RF performance 5
5 Product Images & Dimensions 5
5.1 Dimensions 5
5.2 Pictures 6
6 Bloc diagram 7
7 Electrical Characteristics 7
7.1 Absolute maximum ratings 7
7.2 DC Characteristics 7
8 Locking pin 8
9 Marking and Label 9
10 Packing information 9
11 Behavior 10
11.1 Device life cycle 10
11.2 Overall flow chart 10

© Copyright SIGFOX FRANCE. Confidential. All rights reserved

SIGFOX FRANCE- R.C.S. TOULOUSE 824 211 908
425, rue Jean Rostand - 31670 Labège FRANCE

1 Introduction

The Sigfox connected seal is used to detect the opening of mastic drums. The device detects the presence of a magnet when the drum is sealed and the absence of the magnet when the drum is opened.

Figure 1. Sealed drum - magnet in place (red feature)

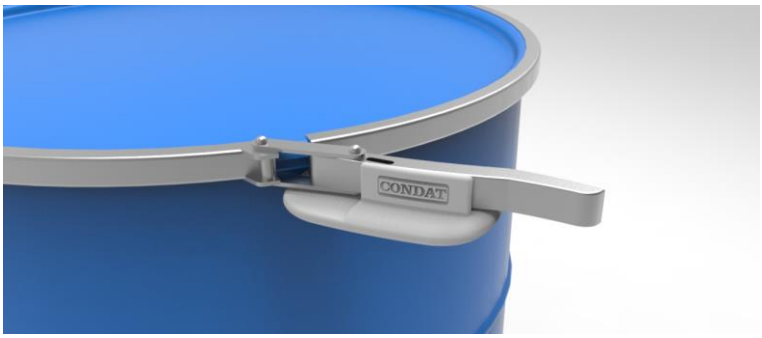

Figure 2. Unsealed drum - magnet removed

2 Product features and assembly description

- Sigfox ready Certification for RC1 to 7
- Built-in MCU/Sigfox transceiver chip
- Built-in Magnet detection sensor
- Device is powered by an CP502440 1.2Ah non-rechargeable battery
- Expected battery life greater than 5 years in activity
- The device shall operate in ambient temperature between -20℃ and +60℃.
- Configurable FW
- Device is easy to attach to a barrel closure system

© Copyright SIGFOX FRANCE. Confidential. All rights reserved

SIGFOX FRANCE- R.C.S. TOULOUSE 824 211 908
425, rue Jean Rostand - 31670 Labège FRANCE

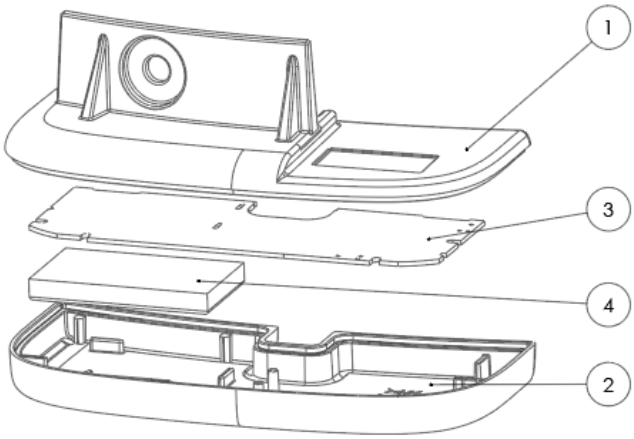

Number	PART	DESCRIPTION	QTY
1	4M9072_TOP_002_A	PP MATERIAL, RAL 7040	1
2	4M9072_BOT_003_A	PP MATERIAL, RAL 7040	1
3	4MOD9072_PCB		1
4	4MOD9072_BAT		1

Figure 3. Product assembly description

3 HW specifications

Specification	Parameter
MCU/Sigfox SoC	STM32WLE
Sigfox radio configuration	RC1 to 7
Operating frequencies	860 to 930MHz
Sigfox Antenna	Internal ceramic antenna
Sensor	1 x Hall effect
Battery	CP502440 LIMNO2 1200mAh
Dimensions	11,5mm x 5mm x 3,7
Weight	52 g
Ingress Protection	IP 64
FW update	• FOTA
Certification	• CE • FCC • Sigfox

© Copyright SIGFOX FRANCE. Confidential. All rights reserved

SIGFOX FRANCE- R.C.S. TOULOUSE 824 211 908
425, rue Jean Rostand - 31670 Labège FRANCE

4 RF performance

Sigfox Radio Configuration (RC)	Nominal Frequency [MHz]	DUT orientation	EIRP (dBm)
1	868.13	Vertical	Tbd
2	902.2	Vertical	Tbd
3	923.2	Vertical	Tbd
4	920.8	Vertical	Tbd
5	923.3	Vertical	Tbd
6	865.2	Vertical	Tbd
7	868.8	Vertical	Tbd

5 Product Images & Dimensions

5.1 Dimensions

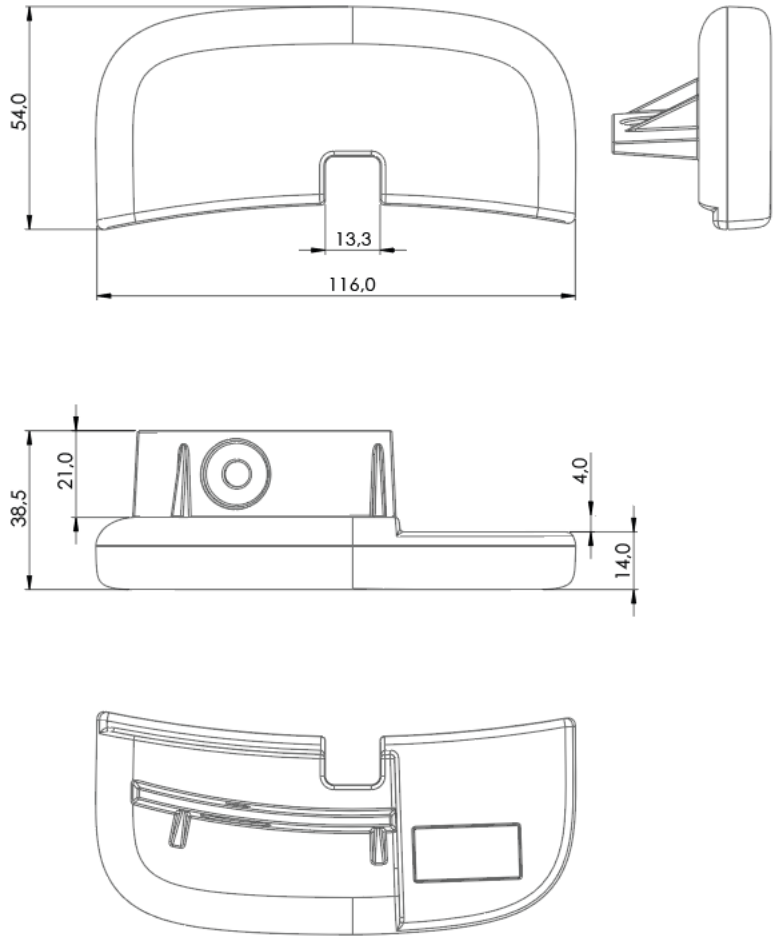

Figure 4. Drawing with dimensions

© Copyright SIGFOX FRANCE. Confidential. All rights reserved

SIGFOX FRANCE- R.C.S. TOULOUSE 824 211 908
425, rue Jean Rostand - 31670 Labège FRANCE

5.2 Pictures

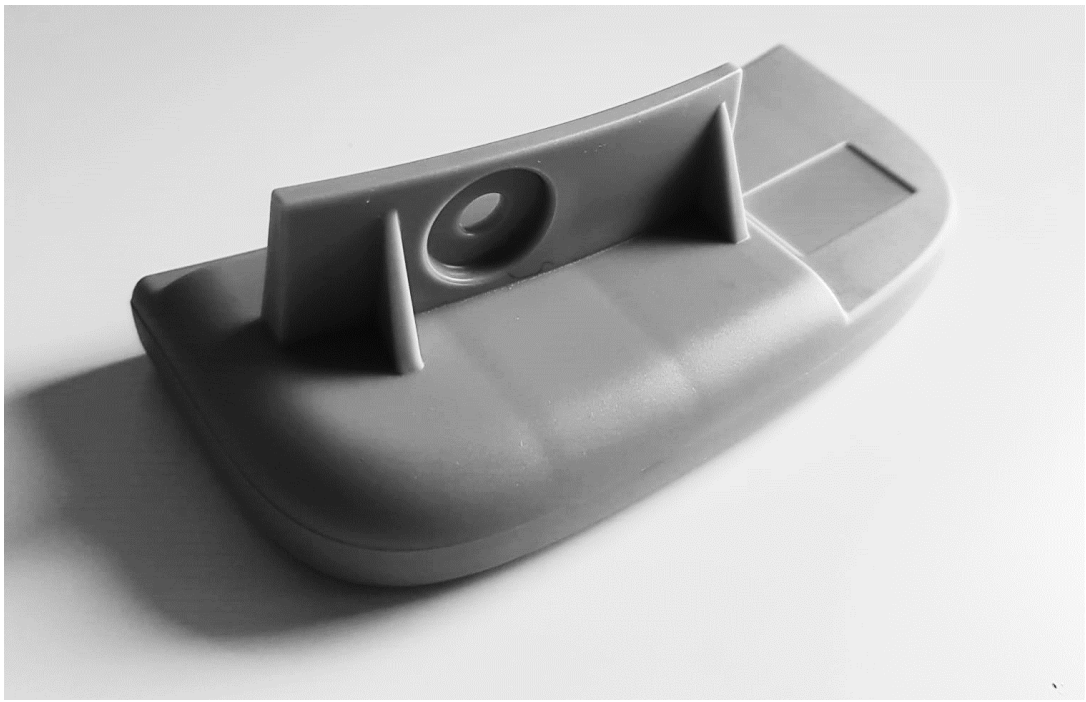

© Copyright SIGFOX FRANCE. Confidential. All rights reserved

SIGFOX FRANCE- R.C.S. TOULOUSE 824 211 908
425, rue Jean Rostand - 31670 Labège FRANCE

6 Bloc diagram

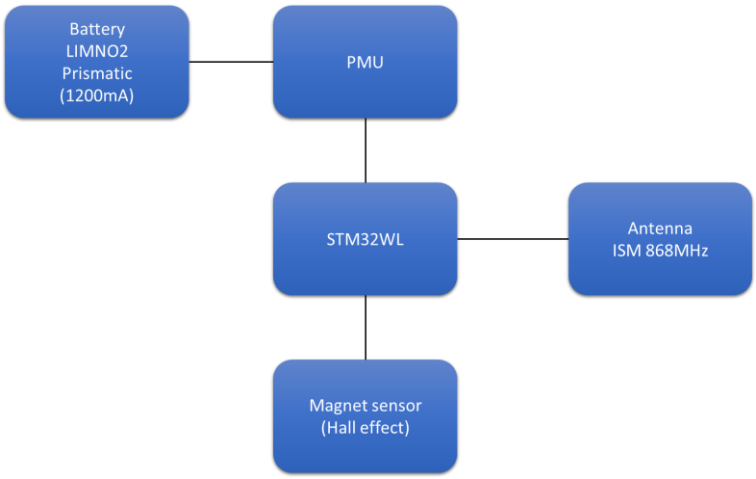

Figure 5. Block Diagram

7 Electrical Characteristics

7.1 Absolute maximum ratings

Parameter	Rating	Unit
Operating / Storage Temperature	-20 ~ +60	°C

7.2 DC Characteristics

Parameter	Typical	Unit
Battery Voltage	3	V
Battery Capacity	1200	mAh
Deep sleep Current	7	µA
Sigfox Tx Current (Low power)	30 - 35	mA
Sigfox Tx Current (High power)	170	mA
Rx Current	7	mA

© Copyright SIGFOX FRANCE. Confidential. All rights reserved

SIGFOX FRANCE- R.C.S. TOULOUSE 824 211 908
425, rue Jean Rostand - 31670 Labège FRANCE

8 Locking pin

The connected seal works together with a specifically designed locking pin.

The magnet that is detected by the seal is placed inside the locking pin that maintains the drum closed. As long as the drum is closed, the locking pin remains in place and the magnet is detected by the connected seal.

When the drum is opened, the locking pin is necessarily broken, and the magnet falls down. At that moment, the device detects the magnet absence and change its behavior accordingly.

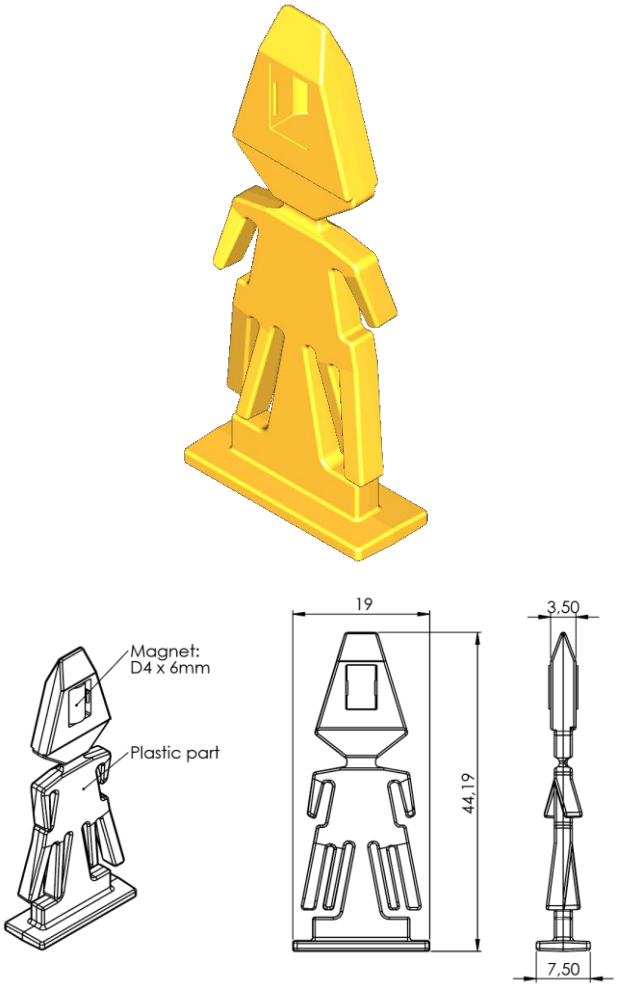

Figure 6. locking pin drawings

The magnet is a cylindrical 4x6mm vertically placed neodymium type magnet.

© Copyright SIGFOX FRANCE. Confidential. All rights reserved

SIGFOX FRANCE- R.C.S. TOULOUSE 824 211 908
425, rue Jean Rostand - 31670 Labège FRANCE

9 Marking and Label

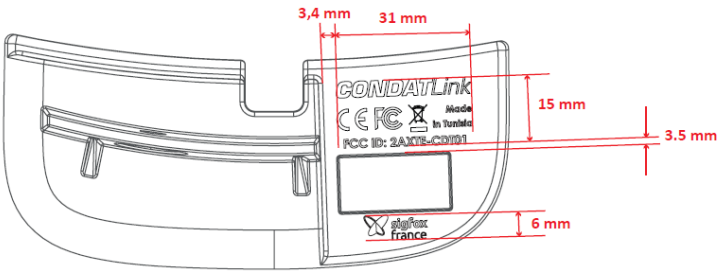

Figure 7. Laser marking

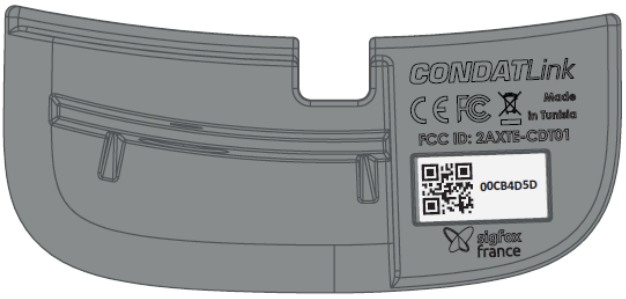

Figure 8. Sticker (QR Code and Sigfox UID

10 Packing information

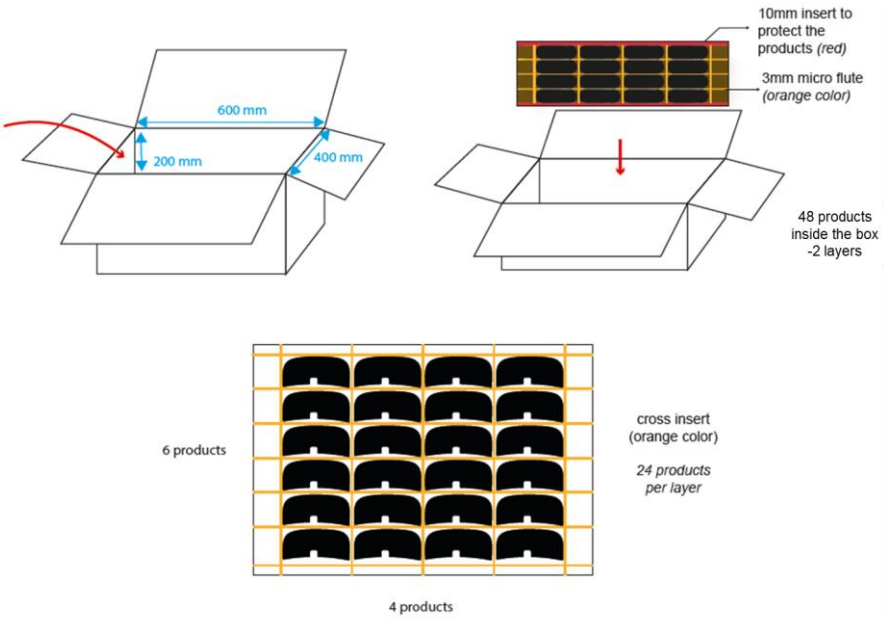

© Copyright SIGFOX FRANCE. Confidential. All rights reserved

SIGFOX FRANCE- R.C.S. TOULOUSE 824 211 908
425, rue Jean Rostand - 31670 Labège FRANCE

11 Behavior

11.1 Device life cycle

Etat boitier	Inactif non alimenté	Deep Sleep	Setup	Preparation	Closed			open	Deepsleep
					Départ Stock Condat	Phase de transport	Stock Client		
Sapin	OFF	OFF	Sur station d'accueil	OFF	ON			OFF	OFF
Com Sigfox	Pas de communication	Pas de communication	Communication locale avec PC	Rc1 1mess/jour	Rc1 1mess/jour Pendant 4/7 jours	Pas de comm Pendant 0/7/14/21 jour	Rcx 1mess/jour	Rcx 1mess/4H ou 8H Pendant 7 jours	Pas de communication
Phase	Stock	Stock	Setup	En attente d'installation	Fut envoyé non consommé			Fut consommé	Récupération objet

11.2 Overall flow chart

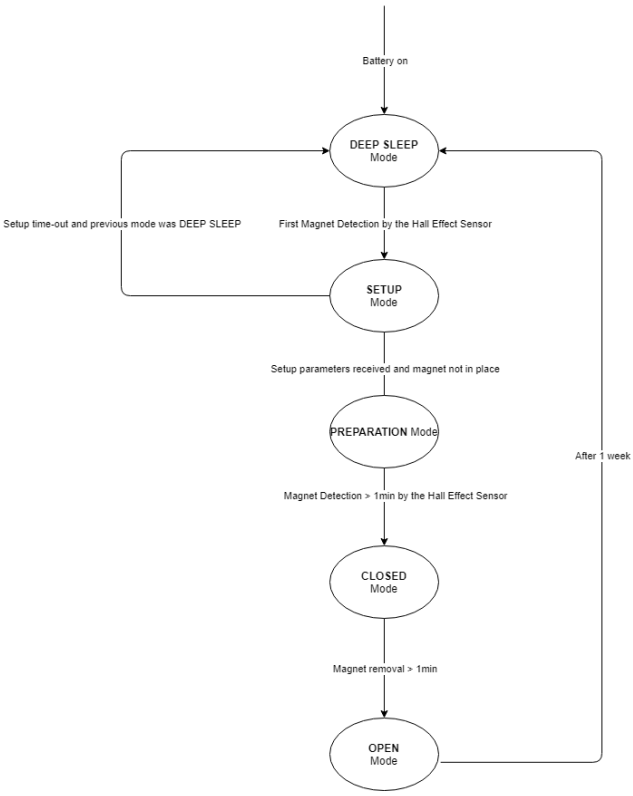

Retour à Stock depuis Preparation et Closed géré de manière opérationnelle:

- Coté device:
  - Mise en place du sapin pour au moins 1 minute : Passage au mode CLOSED
  - Retrait du sapin : Passage au mode OPEN
  - Laisser le tag en quarantaine pendant au moins 1 semaine : Passage au mode STOCK
  - Le tag peux être rmis à nouveau dans le stock
- Coté SAP
  - Passage du tag dans un état "EN QUARANTAINE" pendant une semaine puis en STOCK à nouveau

© Copyright SIGFOX FRANCE. Confidential. All rights reserved

SIGFOX FRANCE- R.C.S. TOULOUSE 824 211 908
425, rue Jean Rostand - 31670 Labège FRANCE

FCC Statement

This equipment has been tested and found to comply with the limits for a Class B digital device, pursuant to part 15 of the FCC Rules. These limits are designed to provide reasonable protection against harmful interference in a residential installation. This equipment generates, uses and can radiate radio frequency energy and, if not installed and used in accordance with the instructions, may cause harmful interference to radio communications. However, there is no guarantee that interference will not occur in a particular installation. If this equipment does cause harmful interference to radio or television reception, which can be determined by turning the equipment off and on, the user is encouraged to try to correct the interference by one or more of the following measures:

- Reorient or relocate the receiving antenna.
- Increase the separation between the equipment and receiver.
- Connect the equipment into an outlet on a circuit different from that to which the receiver is connected.
- Consult the dealer or an experienced radio/TV technician for help.

Caution: Any changes or modifications to this device not explicitly approved by manufacturer could void your authority to operate this equipment.

This device complies with part 15 of the FCC Rules. Operation is subject to the following two conditions: (1) This device may not cause harmful interference, and (2) this device must accept any interference received, including interference that may cause undesired operation.

RF Exposure Information

The device has been evaluated to meet general RF exposure requirement. The device can be used in portable exposure condition without restriction.