MG2S USER MANUAL

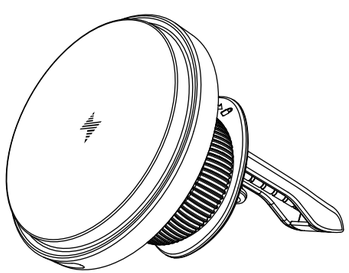

Package

Wireless charger	*1	Air vent mount	*1
Type-C cable	*1	User manual	*1

Functional component

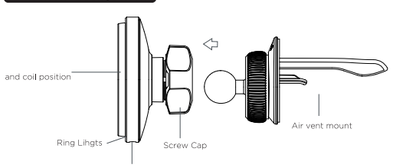

Specifications

Name: MG2S WIRELESS CAR CHARGER
Car charger requirements: QC 3.0/ 18W+ PD car charger
Output power: 15W,10W,7.5W,5W
Induction distance: ≤6mm
Compatible phones: iPhone 12 / 13 (Case-free or with a magnetic case)
Or phones with magnetic ring attached

Dear user: Thank you for purchasing this product. In order to ensure that you get reliable after-sales service, please read the following instructions carefully.

Direction for use

1.Assemble and tighten the product and the accessories through the ball head nut (compatible with other ball head diameter 17mm accessories), and fix in the ideal position. Connect the product with a QC3.0 car charger (optional) with the data cable, and plug in the cigarette lighter to take power.
2.After the product is powered on, the indicator light will turn on and wait for the phone to be placed. After placed the phone, the suction force automatically absorbs the phone, and the coil is aligned. The product will start wireless charging, the indicator light is on for breathing effect; If the phone doesn't support wireless charging or if it detects a metal foreign object, the light flashes alternately for 5 seconds and then goes off. The maximum charging power of this product is 15W, and the charging efficiency will vary according to the charging environment and mobile phone.
3.The best distance of wireless charging is within 3-5mm, and it cannot penetrate metal, so it is necessary to avoid using metal or too thick (over 3mm) mobile phone case, so as to ensure fast wireless charging of mobile phone.
4.After the phone is removed from the product, the indicator will immediately show the standby status . When the car engined off and the power supply stops, the indicator light goes off. The mobile phone is still attached to the product by magnetic force and can be taken off at any time.

Air vent mount

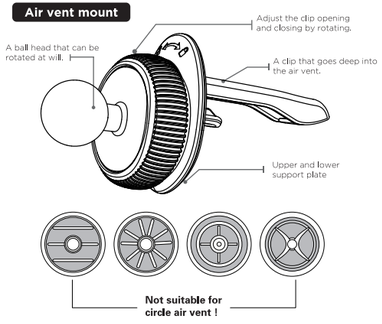

Adjust the position of the top piece of the air outlet and the rotatable clip assembly according to the position of the air outlet blade; insert the blade and select the lock switch position according to the thickness of the blade; suitable for one-key locking of the air outlet of most cars. Silicone touches the car, tighter and fits better to protect the car from scratches.

Precautions

1. Do not use the product in the car at a temperature above 60 degrees.
2. Do not use this product in professional racing or extreme off-road driving.

The guarantee

Products three guarantees valid time:From purchasing date (Prevail to the customer receipt date or invoice date),provide 12 months guarantee.Product surface man-made damage,acces sories missed are not include in this guarantee.We can also provide the service for you for the product is out of surface or doesn't include in this charge,guarantee,but you need to pay the repair charge.

Product Warranty Card

No.:	
Date of purchase:	
Dealer name	
Dealer:	
Name:	Telephone:
Address:	

Warranty content	Warranty date

For your rights and interests, please fill in carefully and keep it safely as a pre-repair certificate! Do not modify the content without authorization, otherwise it will be considered invalid. The company reserves the right of final interpretation of the product after-sales service regulations.

This device complies with Part 15 of the FCC Rules. Operation is subject to the following two conditions: (1) this device may not cause harmful interference, and (2) this device must accept any interference received, including interference that may cause undesired operation

NOTE: This equipment has been tested and found to comply with the limits for a Class B digital device, pursuant to Part 15 of the FCC Rules. These limits are designed to provide reasonable protection against harmful interference in a residential installation. This equipment generates, uses and can radiate radio frequency energy and, if not installed and used in accordance with the instructions, may cause harmful interference to radio communications. However, there is no guarantee that interference will not occur in a particular installation.
If this equipment does cause harmful interference to radio or television reception, which can be determined by turning the equipment off and on, the user is encouraged to try to correct the interference by one or more of the following measures:
-- Reorient or relocate the receiving antenna.
-- Increase the separation between the equipment and receiver.
-- Connect the equipment into an outlet on a circuit different from that to which the receiver is connected.
-- Consult the dealer or an experienced radio/TV technician for help.

Warning: changes or modifications not expressly approved by the party responsible for compliance could void the user's authority to operate the equipment

Radiation Exposure Statement
This equipment complies with FCC radiation exposure limits set forth for an uncontrolled environment.
This equipment should be installed and operated with minimum distance 20cm between the radiator and your body.