MASIGO

X5005
DASH CAM

User's Manual

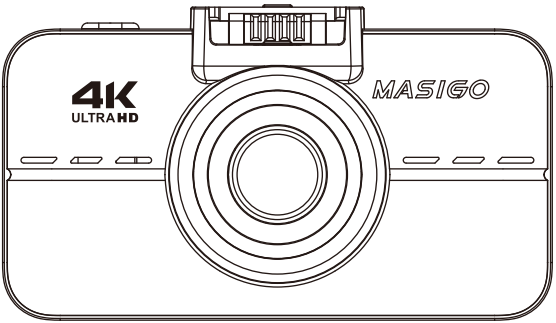

FCCID : 2AXURX5005

Copyright © 2023 MASI AUTO CO., LTD.

1 Safety Precautions And Notice

Please read the instruction manual carefully before using the product to ensure safe and proper usage. Follow the precautions below to prevent injuries to yourself and others, or damage to property.

- Keep the device away from extreme heat, cold, moisture, and dust.
- Do not use liquids or chemical cleaners for cleaning the device.
- Do not insert any objects into the device.
- Avoid exposing the device to direct sunlight for an extended period, as overheating will damage the device and shorten its lifespan.
- Do not operate the controls of this device while driving. Pull over in a safe area before attempting such operations.
- Do not place the device where it obstructs the driver's field of vision while driving or in front of/above any airbag.
- Use only the car charger supplied with your device. The use of any other types of chargers may damage the device and void the manufacturer's warranty.
- Do not disassemble, modify, remanufacture, puncture, or damage the device or batteries.
- Do not attempt to remove or replace the non-user replaceable battery.
- Do not expose the device to fire, explosion, or other hazards, rain, or water.
- Do not attempt to disassemble, repair, or modify the device. Doing so will void the product warranty and damage the device.
- Dash cam usage is prohibited or restricted in some countries or states in compliance with the country's strict privacy laws. Please adhere to local laws.

2 FCC Statement

Changes or modifications not expressly approved by the party responsible for compliance could void the user's authority to operate the equipment.

This device complies with part 15 of the FCC Rules. Operation is subject to the following two conditions: (1) This device may not cause harmful interference, and (2) this device must accept any interference received, including interference that may cause undesired operation.

Note:
This equipment has been tested and found to comply with the limits for a Class B digital device, pursuant to part 15 of the FCC Rules. These limits are designed to provide reasonable protection against harmful interference in a residential installation. This equipment generates, uses and can radiate radio frequency energy and, if not installed and used in accordance with the instructions, may cause harmful interference to radio communications. However, there is no guarantee that interference will not occur in a particular installation. If this equipment does cause harmful interference to radio or television reception, which can be determined by turning the equipment off and on, the user is encouraged to try to correct the interference by one or more of the following measures:

- Reorient or relocate the receiving antenna.
- Increase the separation between the equipment and receiver.
- Connect the equipment into an outlet on a circuit different from that to which the receiver is connected.
- Consult the dealer or an experienced radio/TV technician for help.

3 Box Content

- Front Camera
- Car Charger
- GPS 3M Adhesive Mount
- Rear Camera*
- Rear Camera Cable*
- User's Manual (includes a static cling and a 3M adhesive tape)

Note:
* It is only available for dual channel dash cam.
* The rear camera cannot be operated on its own.
* Supplied accessories may vary by region.

4 Product Overview

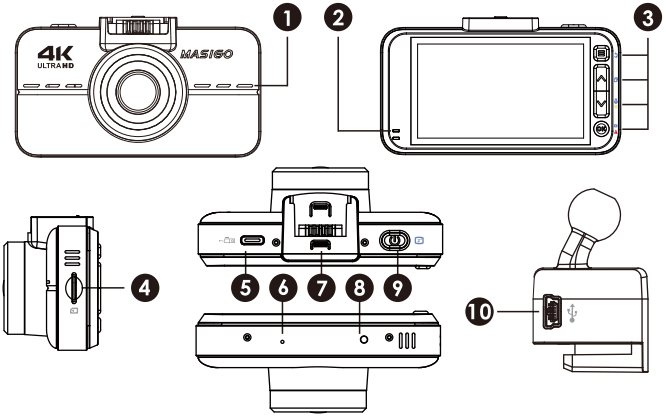

1 Speaker:
Audio output

2 LED indicator:
Steady red light: Power on
Flash red light: Recording
Steady blue light: The camera is connected to a power source
Blue light off: Not connected to a power source

3 Function buttons:
There are 4 function buttons to operate the camera in difference way.

《At Recording Screen》

① Open menu, and go through video menu, system menu and playback menu.

② Switch PIP display

③ Turn off/on the microphone. Hold and press to enable Wi-Fi.

④ File protected button.

《At Menu Screen》

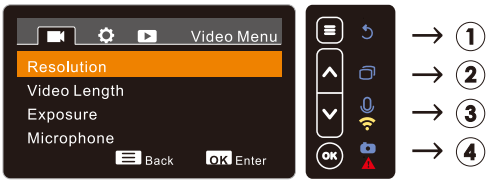

① Back to previous page.

② Up button: Navigate to the previous option.

③ Down button: Navigate to the next option.

④ OK

《At Video Playback Screen》

① Press once to stop the video, press twice to the previous menu page.

② Press once to stop the video, press twice to previous clip; Press and hold to backward the current video at 2X speed, release it to playback the current clip.

③ Press once to pause the video, press twice to next clip; Press and hold to forward video at 2X speed, release it to playback the current clip.

④ Playback or pause the video.

❹ **Memory card slot:**
Insert a micro SD card for recording.

❺ **Video in port:**
Connects to rear view camera.

❻ **Microphone:**
Records audio.

❼ **Mounting slot:**
Attached the suction cup mount.

❽ **Reset:**
Press to force the camera restart.

❾ **Power button:**
Hold to turn the camera on/off; Press once to turn off/on the screen, and the camera is on standby mode.
X5003 features on a super capacitor, and must be connected to a power source for operation.

❿ **Mini-USB power port:**
Plug the power cable into the USB port.

5 System icon

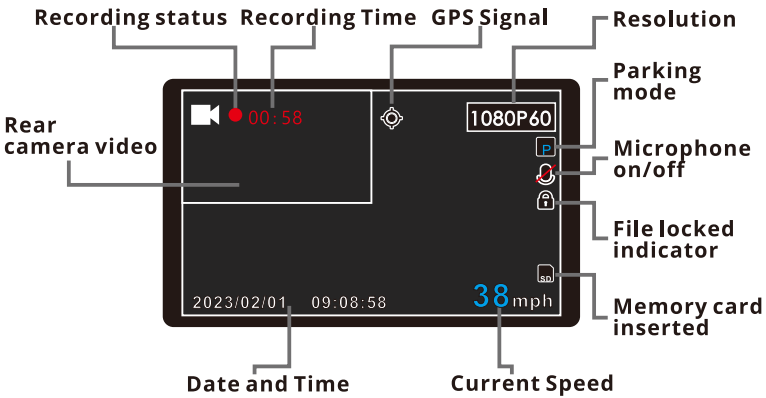

6 Getting started

Inserting memory card
A micro SD memory card is required to insert to the camera before start recording. Your micro SD card should have a minimum speed rating of Class 10 and at least a U3-rated.
Be sure to format the memory card with the device before initial use.

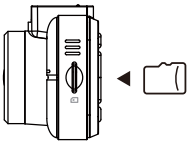

To remove a memory card, turn off the camera and press the memory card to pop it out of the slot.

Note:
Removing the memory card while the camera is on can result in a loss of data.In order to maintain the card's full speed performance, preserve its storage capacity and reduce the risk of storage errors, you should regularly format your micro SD card. Don't forget backing up your memory card before reformat it.

MASIGO does not guarantee the compatibility with memory card from all manufacture.

Recording Time

Recording Time	Card Capacity				
	32GB	64GB	128GB	256GB	512GB
1CH Max. Recording Time	144min.	288min.	576min.	1152min.	2034min.
2CH Max. Recording Time	90min.	180min.	360min.	720min.	1440min.

Installation in your vehicle

【Installing the front camera】

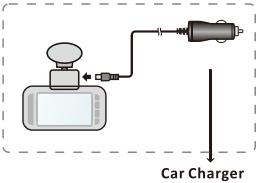

【Installing the front and rear cameras】

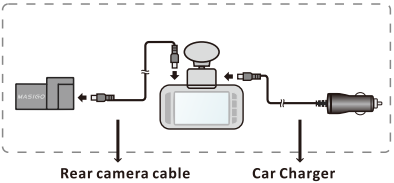

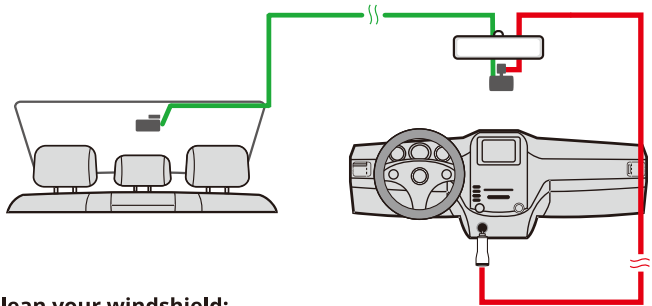

1.Clean your windshield:

Cleaning the inside and outside of the windshield with window cleaner beforeapplying the adhesive.

2.Mount the dash cam:

Mount the dash cam in or near the middle of your vehicle's windscreen and just below, behind the rear view mirror, don't block driver's view of the road ahead.

Applying the static cling to the windshield of your car is highly recommended. Make sure the clear film is secure by pressing it down on the windshield. The clear film should be flat and rid of any air bubbles. Apply your camera's adhesive mount on top of the film to finish. To remove the mount, easily peel away the removable film.

3.Connect the power cable:

Connect the car charger to your dash cam and vehicle power outlet. Route wires behind the vehicle trim along the windshield, doorframe or dash.

4.Adjust the lens angle

Rotate the adjusting knob, Loosen counterclockwise to adjust the direction of dash cam and then tighten it clockwise after adjustment. Recommend the ratio of the ground to the sky in the screen is about 6: 4.

7 Basic Operation

Turn on/off the camera

- Automatically
  The camera will automatically power on and start recording once received power.
- Manually
  Press and hold the power button " ⏻ " for 3 seconds to turn on/off the camera.

Select language, time zone, date time and speed unit

Go through the settings below for the first-time setup to select language, Time Zone, date time and Speed unit.

- Select language
  Press the up and down button "∧ ∨" to select the language, and press OK button " OK " to the next setting.

- Select Time Zone
  Press the up and down button "∧ ∨" to select your current time zone from the list, which will allow Daylight Savings time to be adjusted. Then press OKbutton " OK " to the next setting.

- Set Time and Date
  Press the up and down button "∧ ∨" to set the current time and date, press OK button " OK " to next number setting and exist.

- Select speed unit
  Press the up and down button "∧ ∨" to display the speed in km/h or MPH

8 Video Recording

Continuous recording

The camera will automatically turn on and start continuous recording after connect to the car charger. Or manually turn on the camera by pressing Power button " ⏻ " .
In continuous recording mode, videos are recorded in several segments and save in the "Normal" folder of the micro SD card. The default setting is in 1 minutes' segment, you can change the recording length in Video Menu Setting.

Incident recording

During continuous recording, when the camera detects possible accidental collisions, a 1 minute/3 minutes video footage (depends on the loop recording selected length) is locked from been overwritten and save in the “Event video” folder automatically. You can adjust the G-sensor level in Video Menu setting, default is low.

Manual recording

When the camera is on recording, pressing the file protected button “ ▲ ” to lock a 1 minute/3minutes video footage from been overwritten and save in the “Event video” folder. At the same time, a snapshot is saved in the “Event photo” folder automatically.

Parking surveillance

Parking surveillance requires a constant power supply from carbattery. Hardwire cable built with battery discharge preventionis recommended. Camera will automatically enter to parking mode when car stop moving for over 10 minutes. If the vehicle is subjected to a collision, the camera automatically records a 1 minute/3 minute video footage and save in “Event video” folder.

- Default is disable. Enable Parking Surveillance function in Video Menu setting.

—Press MENU button ” ≡ ” once to enter Video Menu setting.

—Press down button ” ∨ ” to scroll down the menu list and select Parking surveillance.

—Press ”OK ” button and select “ on ” to enable parking recording function.

- Camera will return to continuous recording when detected movement subsequently.

9 Playback Mode

Press the Menu button ” ≡ ” three times to enter the Playback Menu page, and press up and down button ”∧ ∨” to scroll down the folder. Press ” OK ” button to review the files.

Folder Name	Recording Type
Normal	Continuous recording
Event Video	Incident recording during continuous recording; manually recording.
Event photo	Snapshot when press the file protected button " ⚠ 📷 " during continuous recording.

Note: Camera stops recording while view videos and photos.

File name format

210701_092830_001_F.MP4
210701_092830_001_R.MP4

Year	Month	Day	Hour	Minutes	Seconds	Serial number	Front view recording
21	07	01	09	28	30	001	F
Year	Month	Day	Hour	Minutes	Seconds	Serial number	Rear view recording
21	07	01	09	28	30	001	R

10 Connect to Wi-Fi

MASIGO Viewer

Search and download MASIGO Dashcam Viewer(Worldwide) in Google Play Store or Apple App Store. You can view and download recorded videos, change camera settings and update the camera firmware on your smartphone.

Minimum requirements for running this application

- Android 8.0 or higher
- iOS 8.0 or higher

Connect camera to a smartphone

1. Press and hold the camera Wi-Fi button " ⌄ " to enable Wi-Fi hotspot.
2. On your smartphone, select the Wi-Fi network name same as displayed on the camera MASIGO XXXXX-XXXX, and enter Wi-Fi password"12345678".
3. Run **MASIGO Dashcam Viewer**
4. Tap **Connect Dash Cam > Enter Dashcam > Connecting > Connected.** Then camera is connected to your smartphone via Wi-Fi.
5. Tap **Settings** to change camera settings on your smartphone.
6. Tap **Playback** to view and download recorded videos on your smartphone, and save videos to your phone's album/pictures.

11 Camera Setting

Press Menu button " ≡ " once to access the Menu setting, use the up and down button "∧∨" to scroll down the function, and press the " OK " button to enter the options screen.

Video Menu	Description (*Factory default setting)
Resolution	Front only–4K 30/ 2K 60 Front and Rear-4K 30 +2K 30/2K 60+1080P 30/ 1080P60+1080P60
Video Format	MP4*/TS
Video Length	1 Minute*/3 Minutes
Exposure Value- Front Exposure Value- Rear	+3/+2/+1/0(auto)*/-1/-2/-3
Microphone	On*/Off
G Sensor	High/Medium/Low*/Off
Plate Stamp	On/Off*
Parking Surveillance	On/Off*
Rotate Display-Front	On/Off*
Rotate Display-Rear	On/Off*
Mirror Display-Rear	On/Off*

Time & Date Stamp	On*/Off
Model Number Stamp	On*/Off
GPS Stamp	On*/Off
Speed Stamp	On*/Off

Press Menu button " ≡ " twice to access the system setting.

Setup Menu	**Description (*Factory default setting)**
WiFi	On/Off*
Format Memory Card	Cancel/OK
Time & Date	Sets time and date in the system
Daylight Saving Time	Off*/On
Time Zone	Select your current time zone from the list, which will allow Daylight Savings time to be adjusted.
Speed Units	km/h mph*
Language	English*/Español/Français
PIP Display	Main: Front, Sub: Off/Main: Rear, Sub: Off/Main: Front, Sub: Rear*/ Main: Rear, Sub: Front
Screen Saver	Off/HUD*/10 Seconds/30 Seconds/1 Minute
Screen Brightness	100%/80%/60%*/40%/20%
Device Sounds	On*/Off
Frequency	50Hz/60Hz*
Default Settings	Camera will start up with factory default settings automatically.
System Version	Check the Firmware version.

Note:
You can also configure the camera settings via MASIGO Viewer APP on your smartphone.

12 Playback on computer

Download and install the VLC media player to play the videos on your computer.

- Remove the micro SD card from the camera, insert it to the micro SD card adapter, and connect it to your computer.
- Using the VLC media player to play videos on your computer.

13 Warranty Terms

Thank you for your purchasing MASIGO dash cam. Should your product require warranty service, please contact us directly to determine the problem and the most appropriate solution for you. See details below

MASI AUTO CO., LTD
7F.-10, No.9, Sec.2, Nankan Rd., Luzhu Dist., Taoyuan City 338, Taiwan
www.masigo.net
Email: service@masiauto.com
Facebook: @masigodashcam

MASIGO product is guaranteed against defects in materials and workmanship under normal use for a period of one (1) year from the date of purchase (“Warranty Period”).
During the Warranty Period, MASI AUTO will repair or replace, at no charge, products or parts of a product that proves defective because of improper material or workmanship, under normal use and maintenance.

This Limited Warranty does not cover any problem that is caused by:

- Damaged caused by misuse including but not limited to failure to use the product for its normal purpose or according to the user instructions or use of the proper use and maintenance, and to installation or use of product inconsistent with the safety standards in force in the country where it is used.
- Damaged caused by accidents including but not limited to lightning, water, fire, misuse or neglect.
- Defacing, illegibility or removal of the model or serial number on the product.
- Damage resulting from repairs or adjustments which have been conducted by unauthorized service organizations or persons.
- Defects in any system into which the product is incorporated or with which it is used.

Disclaimer

The material in this manual is for informational purposes only. MASI AUTO reserves the right to change or improve its products and to make changes in the content of this manual without obligation to notify any person or organization of such changes or improvements. Go to www.masigo.net for current updates and supplemental information concerning the use of this product.
MASI AUTO shall not be liable for any damages, including without limitation, direct, incidental, consequential, indirect or punitive damages, arising out of access to, or any errors or omissions in the content thereof.

This device complies with part 15 of the FCC Rules. Operation is subject to the condition that this device does not cause harmful interference (1) this device may not cause harmful interference, and (2) this device must accept any interference received, including interference that may cause undesired operation.
Any changes or modifications not expressly approved by the party responsible for compliance
could void the user's authority to operate the equipment.
NOTE: This equipment has been tested and found to comply with the limits for a Class B digital device, pursuant to Part 15 of the FCC Rules. These limits are designed to provide reasonable protection against harmful interference in a residential installation. This equipment generates, uses and can radiate radio frequency energy and, if not installed and used in accordance with the instructions, may cause harmful interference to radio communications. However, there is no guarantee that interference will not occur in a particular installation.
If this equipment does cause harmful interference to radio or television reception, which can be determined by turning the equipment off and on, the user is encouraged to try to correct the interference by one or more of the following measures:
-- Reorient or relocate the receiving antenna.
-- Increase the separation between the equipment and receiver.
-- Connect the equipment into an outlet on a circuit different
from that to which the receiver is connected.
-- Consult the dealer or an experienced radio/TV technician for help.
To maintain compliance with FCC' s RF Exposure guidelines, This equipment should be installed and operated with minimum distance between 20cm the radiator your body: Use only the supplied antenna.
FCC ID: 2AXURX5005