SPECIFICATION

SHEET FOR APPROVAL

（Revision：R：A3）

	CUSTOMER	Nexhome	
	CS P/N	DH-I66S（P）	
	PART NAME	WIFI/BT	
	FREQUENCY	2400-2500MHz	
	ZTX NO.	F.00000475	
	DATE	2022-9-23	

http://www.chinaztx.com

ANTENNA SPECIFICATION

CUS P/N : DH-I66S（P） WIFI/BT ApplicationDate:Sep,23,2022 Rev: R:A3

ZTX P/N : DH-I66S（P） WIFI/BT Editor:

1. Test equipment

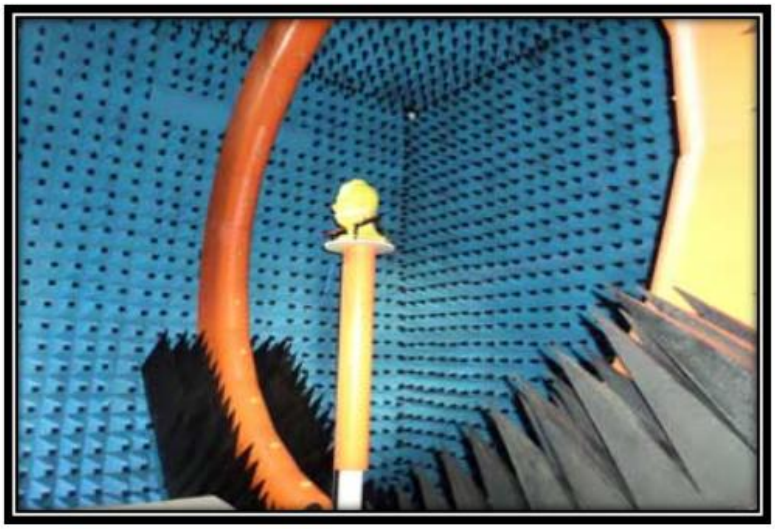

Owned 6 microwave dark room, equipped 2 sets world leading France Satimo SG24 OTA certification test systems（one in SHENZHEN, another one in Shanghai）, ETS OTA Standard test system，Blue test reverberation test system which is High repeatability, high accuracy and high resolution. It can quickly provide accurate test reports, fully meet the CITA standards.

Testing range:

Support active, passive testing of GSM/CDMA/WCDMA/TD-SCDMA/LTE/WIFI/WLAN/WiMax/BT /GPS/MIMO/UWB within0.4-6G.

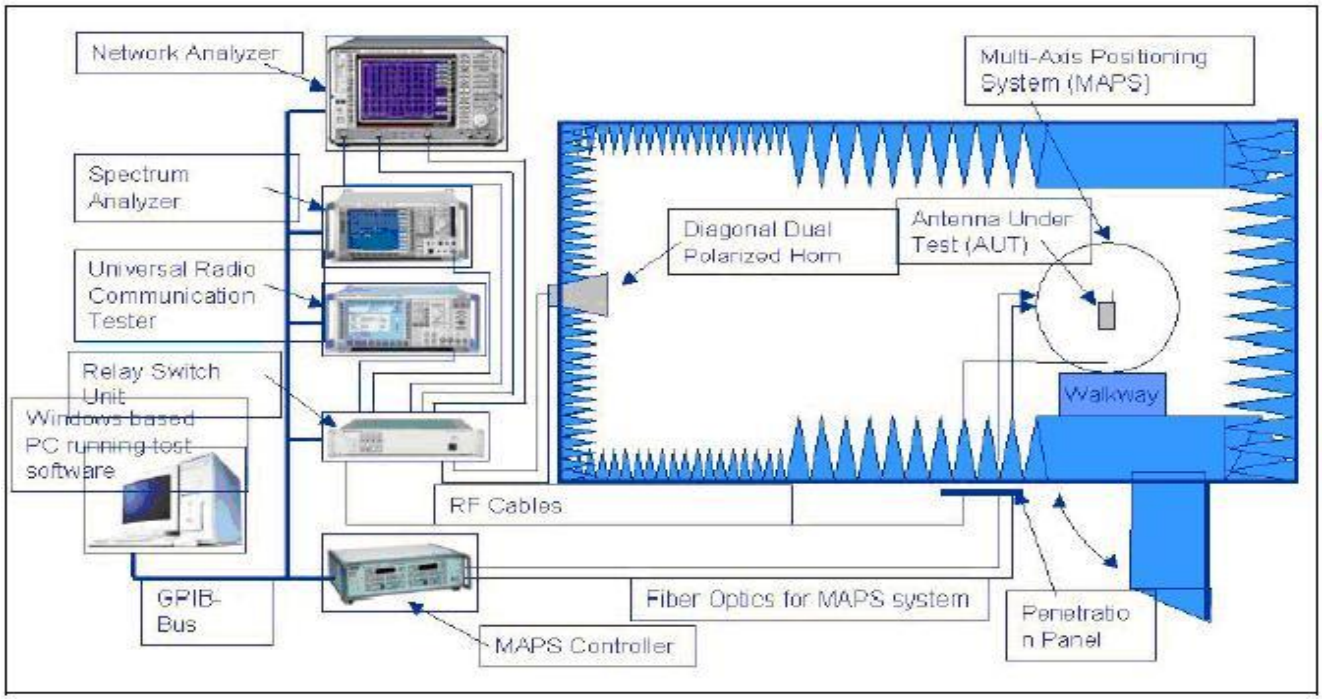

2.Antenna test data

2-1 VSWR

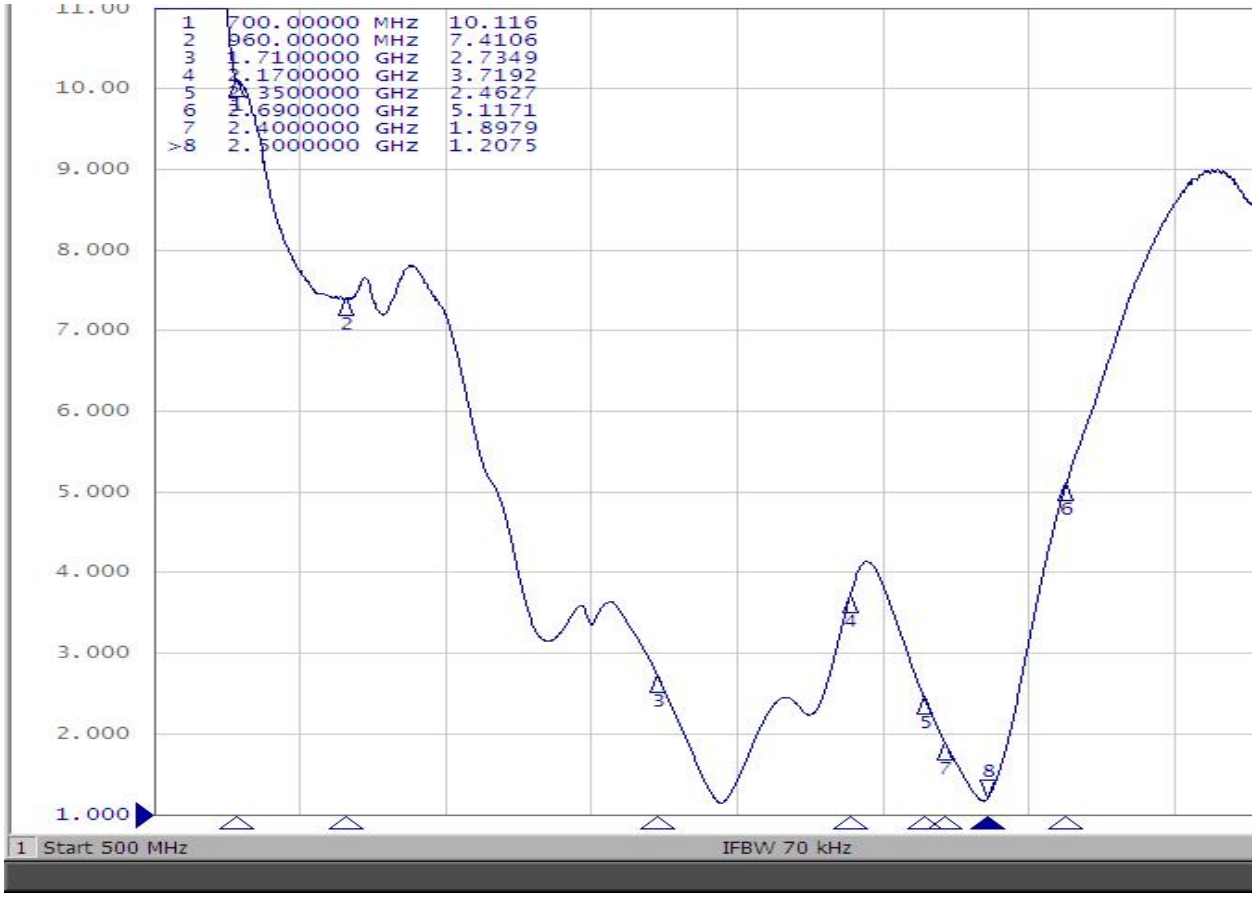

2-2 Antenna passive test

chNo	Freq (MHZ)	Gain (dBi)	Efficiency_Pcent (%)
1	2400	3. 4	20. 81198
2	2420	3. 3	21. 50228
3	2440	3. 4	22. 4061
4	2460	3. 5	22. 68105
5	2480	3. 7	21. 96306
6	2500	3. 6	20. 76469

2-3 3D radiation drawing

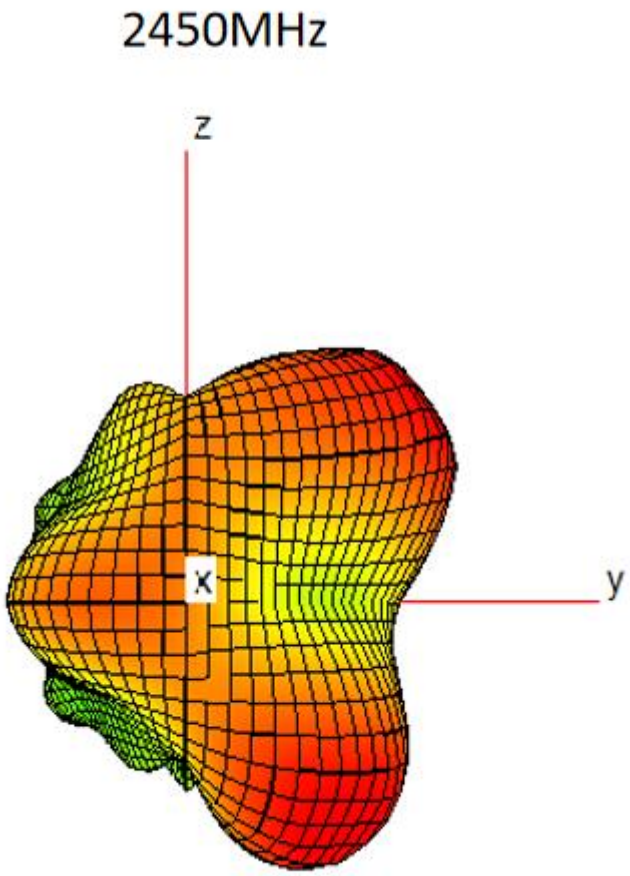

2-4 Active test data

2-5 Matching circuit

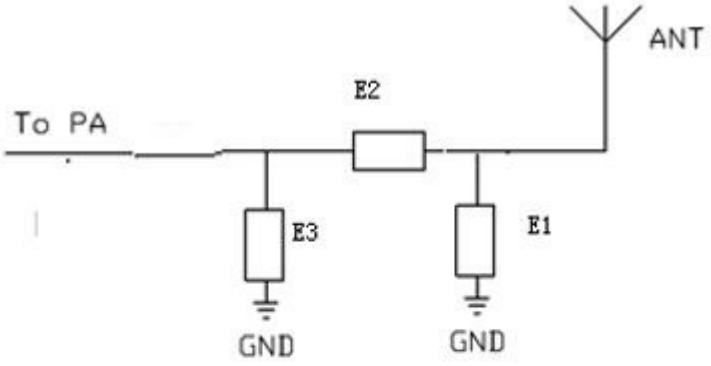

	WIFI/BT
E1	NC
E2	0Ω
E3	NC

2-6 Environment treatment

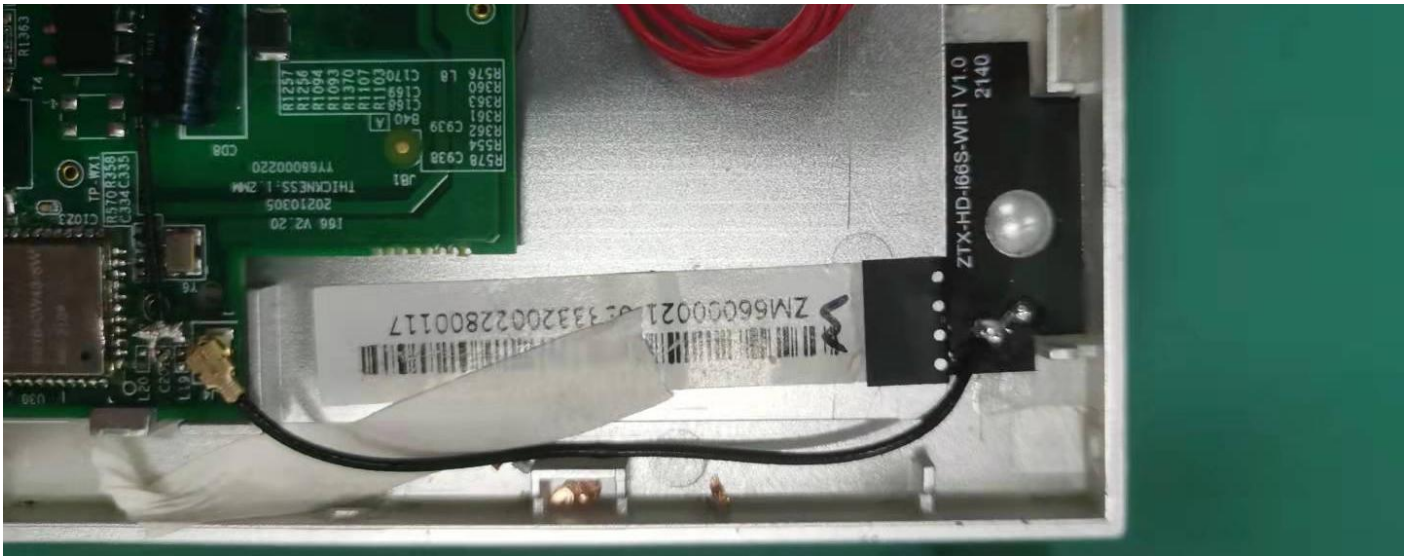

ANTENNA SPECIFICATION

CUS P/N : DH-I66S（P） WIFI/BT
ZTX P/N : DH-I66S（P） WIFI/BT

ApplicationDate:Sep,23,2022
Editor:

Rev: R:A3

3. Mechanical Specification

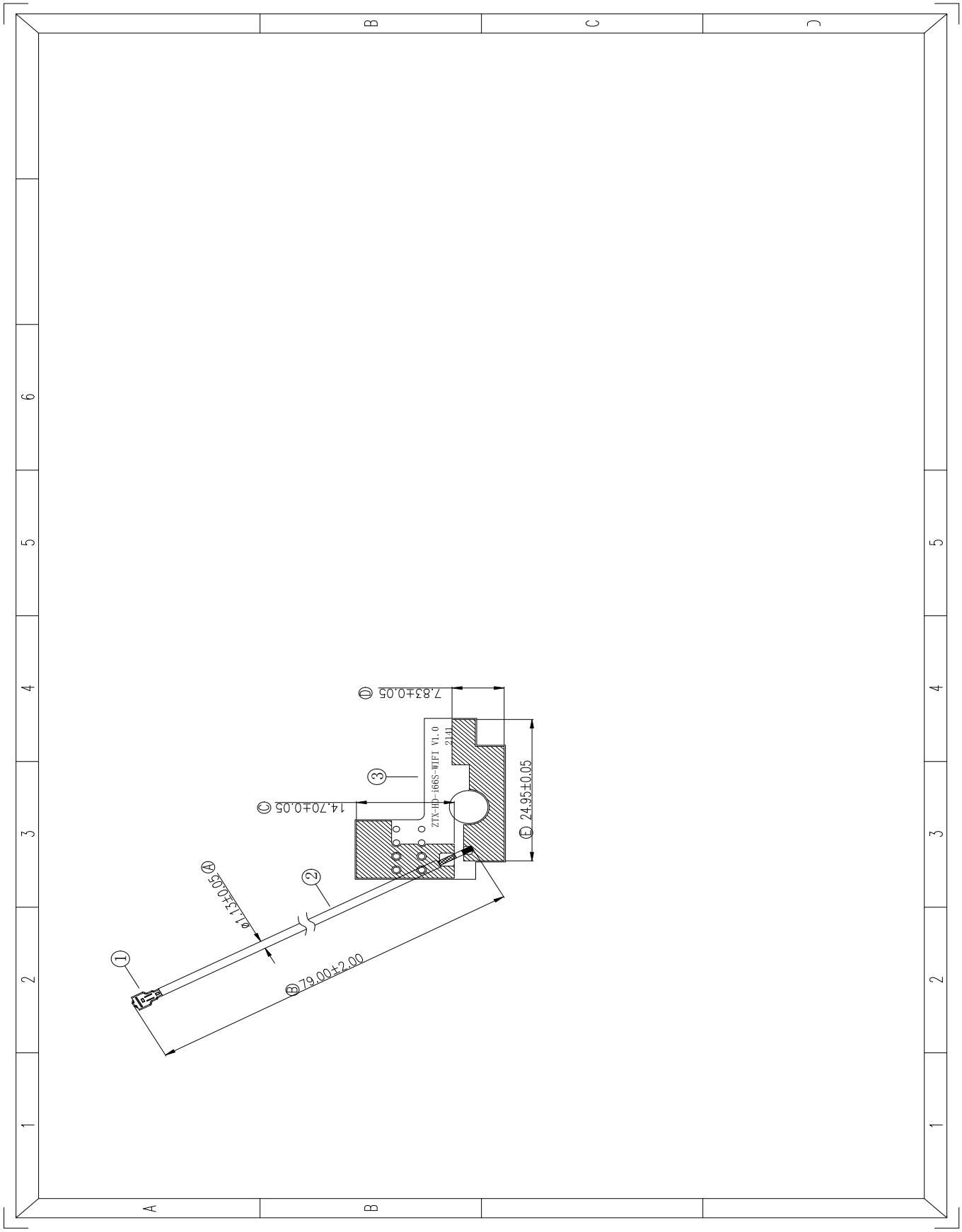

4.Size report

5.Salt-Spray test

6.Environment Characteristic

NO.	ITEM	TEST CONDITION	SPECIFICATION
4-1	High Temperature/Humidity Storage Test(non operating)	1.Temperature: +70 ±2℃ 2.Humidity: 90~95%RH 3.Time: 48hrs	No material deformation is allowed. The VSWR, Gain, Radiation Pattern must be met specifications after these test.
4-2	Low Temperature/Humidity Storage Test(non operating)	1.Temperature: -30±2℃ 2.Humidity: 0%RH 3.Time:48hrs	