HIKMICRO

Thermographic Cube Camera

Quick Start Guide

Thermographic Cube Camera	English
	Deutsch
	Français
	Español
	Português
	Italiano
	Čeština
	Slovenčina
	Polski
	Magyar
	Română
	Nederlands
	Dansk
	Norsk
	Suomi
	Svenska
	Русский
	Türkçe
	日本語
	한국인
	繁體中文

A

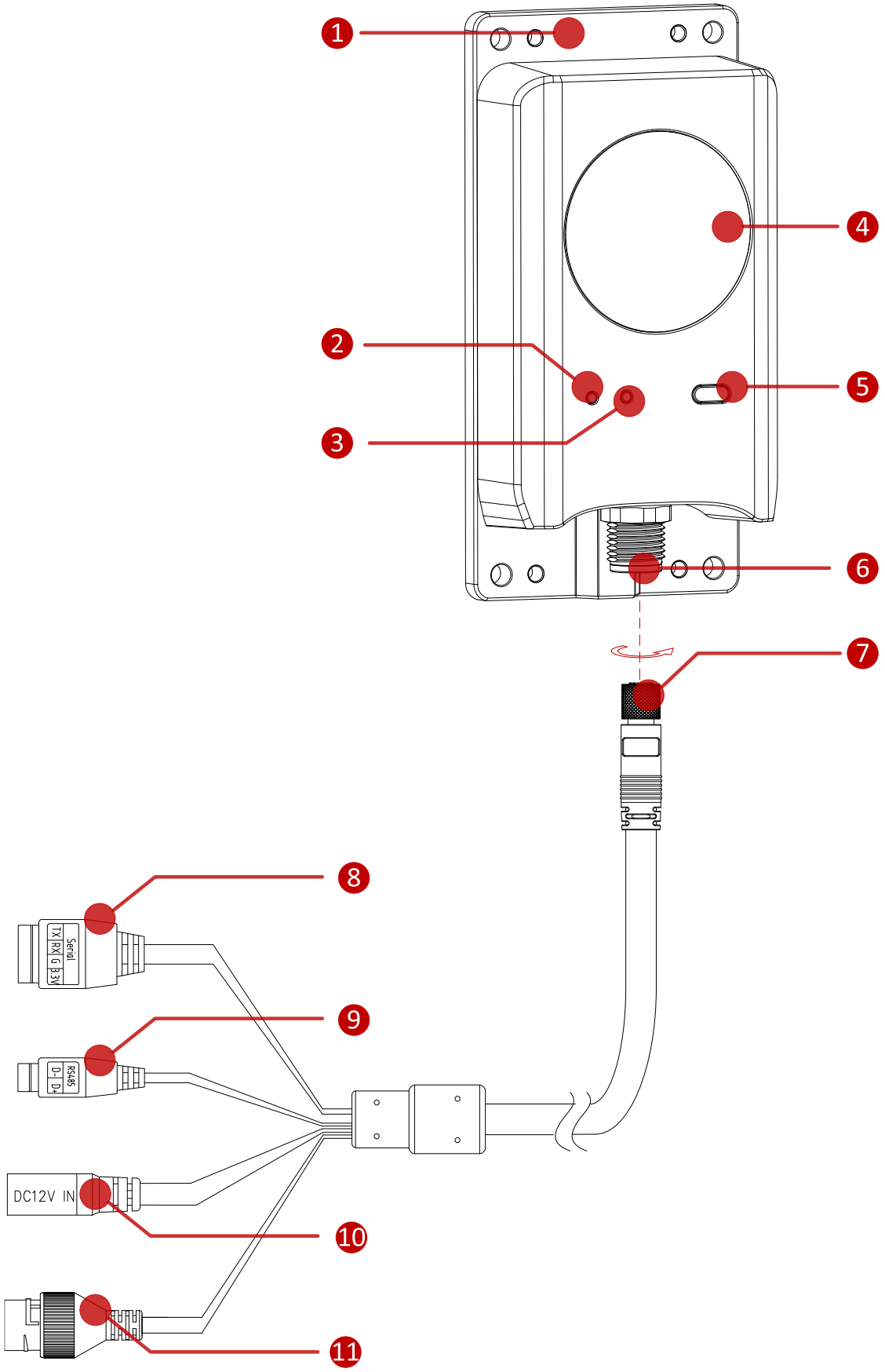

B

B.1

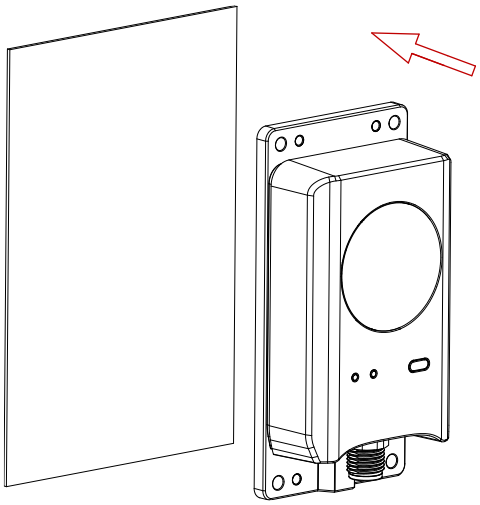

B.2

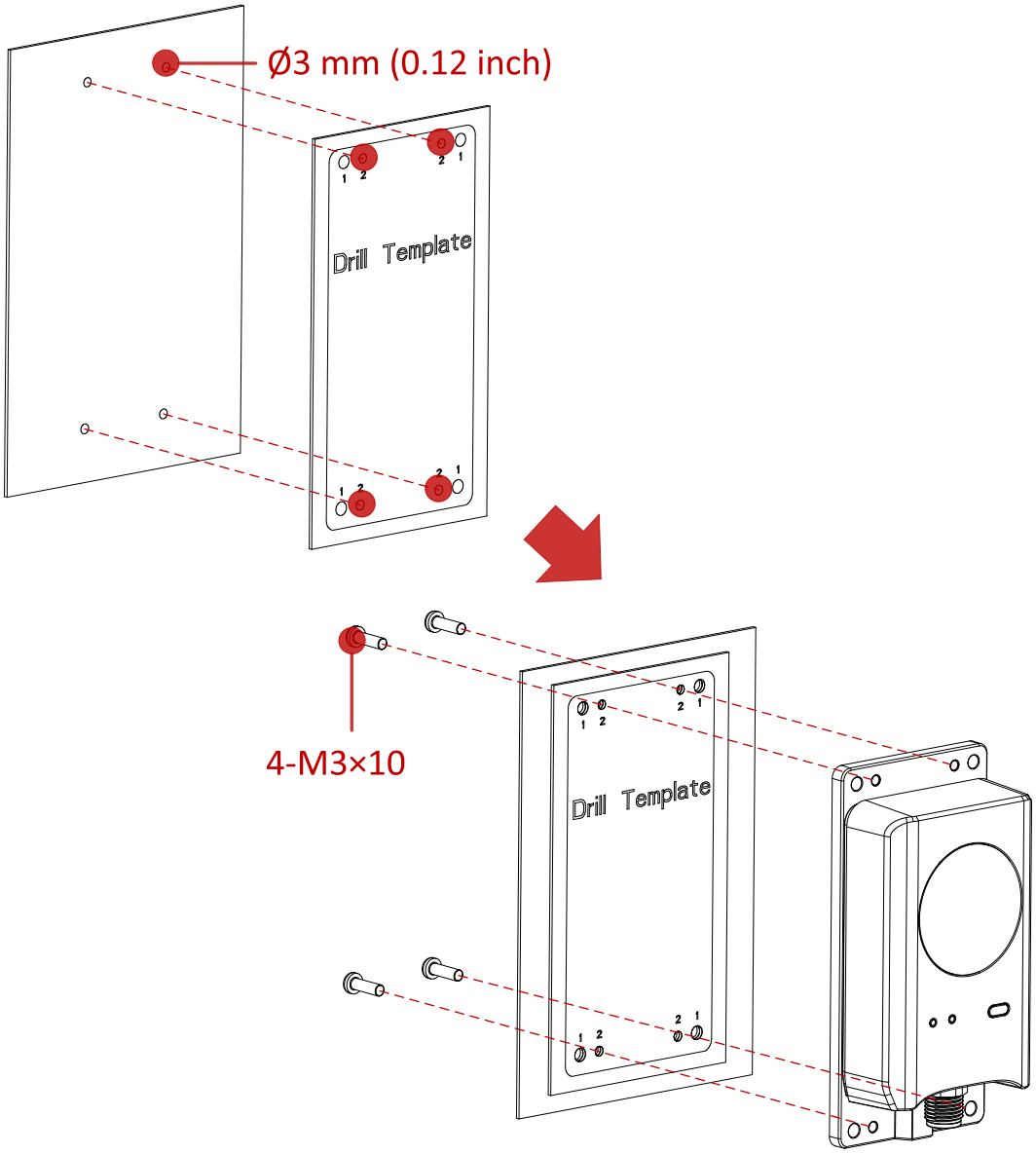

B.3

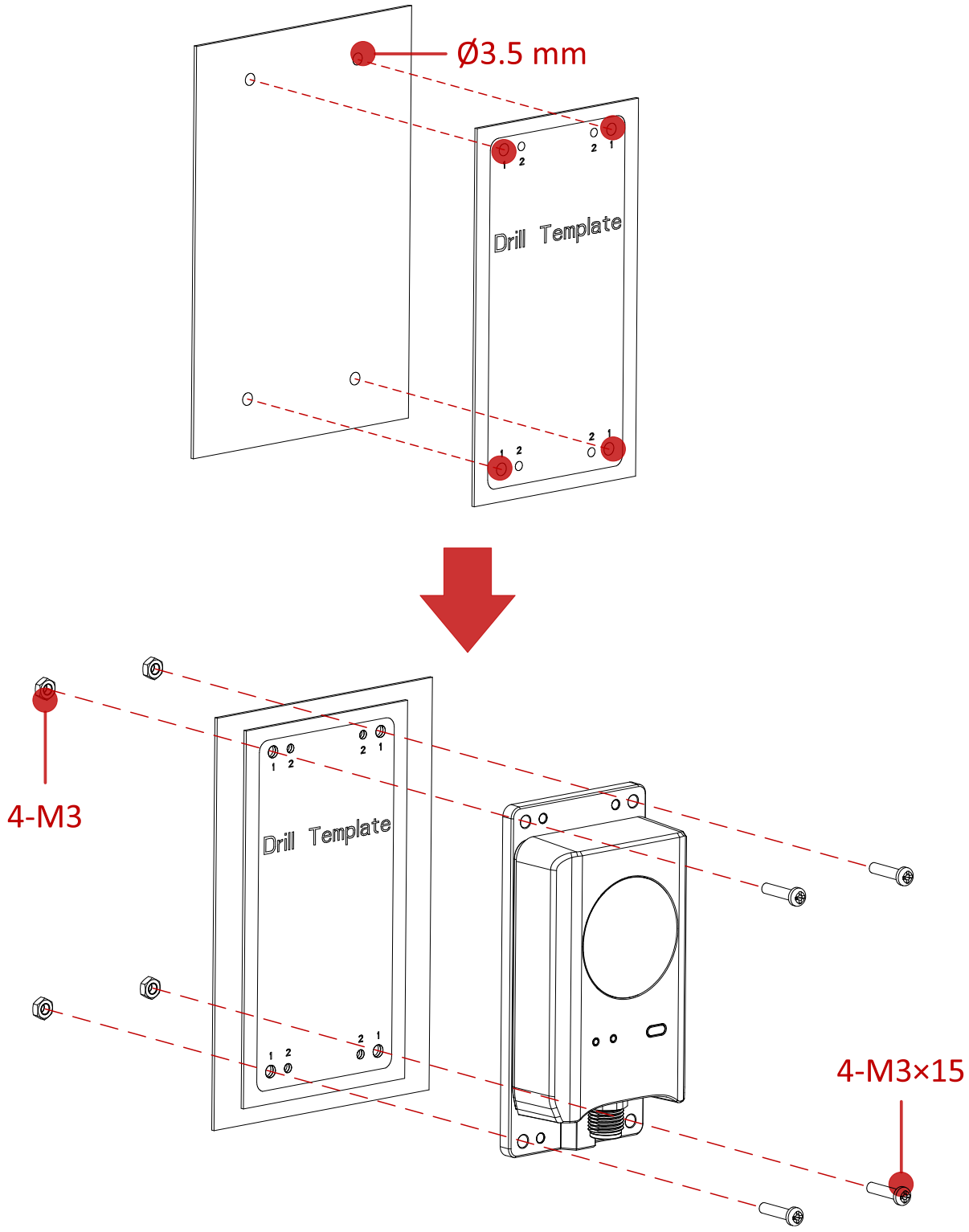

B.4

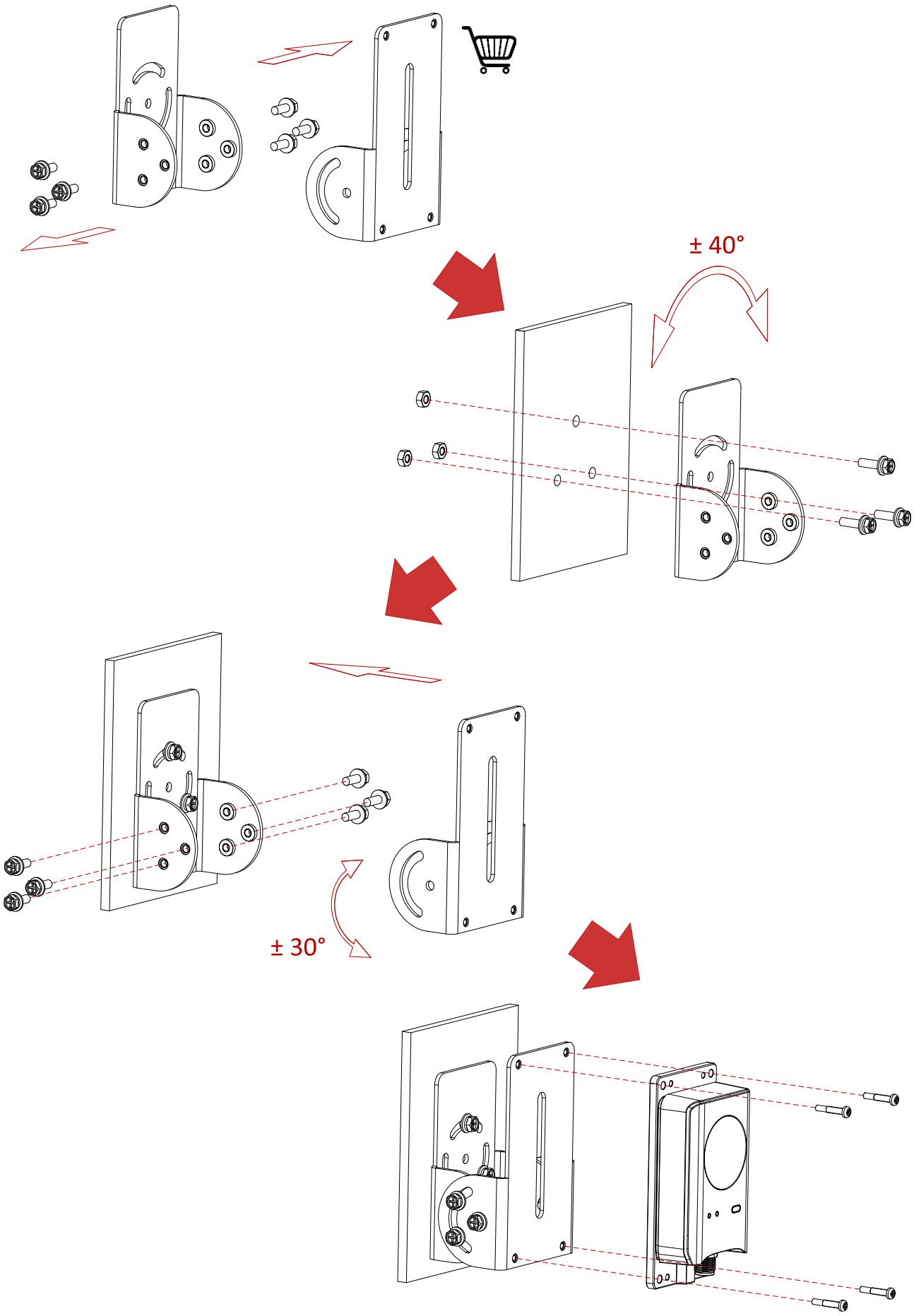

1. Introduction

Thermographic Cube Camera Series is able to measure object's temperature at a high accuracy in real time. For the model with 433 MHz data transmission function, it is capable of wireless data transmission among different transducers and gateways. It is often applied to electric system, industrial automation, etc. for fire prevention. The pre-alarm and network system helps you discover unexpected events immediately and protects your property effectively.

2. Appearance (Page 1 – A)

Component & Interface

No.	Component	Description
1	Magnatic Installation Panel	Installation panel. Choose one of the following ways to mount the device ● Attach the device to a ferromagnetic surface ● Screw the device to installation surface.
2	Power Indicator	● Solid Red: Start normally. ● Solid Green: Work normally.
3	Network Indicator	● Solid Yellow: Network connection failed. ● Flashing Yellow: Network connection succeeded.
4	Thermal Lens	Aiming at targets for temperature measurement
5	Reset Button	To reset the device, you need to hold the reset button to boot it. Then keep holding the reset button for 5 seconds, and wait until the power indicator turns from red to green.
6	Cable Connector	Aviation plug, female.
7	Cable Connector	Aviation plug, male. Screw the male connector clockwisely to fix the cable.
8	Serial Port	For debugging
9	RS-485 Port	For RS-485 communication
10	Power Supply	12 VDC input
11	Network	RJ45 Network Interface, 100M

3. Install Camera (Page 2 – B)

Before installation, make sure that the installation surface is strong enough to withstand four times the weight of the device and the accessory. Check the specification of the products for the installation environment.
Select a desired installation method from B.1 to B.4.

Installation Method and Steps

Method	Steps
B.1	1. Attach the device to a ferromagnetic surface.
B.2	1. Paste the drill template to the installation surface. 2. Drill 4 screw holes (Ø3 mm) according to the “2” holes. 3. Screw the device to the surface with 4 supplied M3×10.
B.3	1. Paste the drill template to the installation surface. 2. Drill 4 screw holes (Ø3.5 mm) according to the “1” holes. 3. Screw the device to the surface with supplied M3×15 screws and M3 nuts.
B.4	Purchase a PT joint in advance. 1. Disamble the PT joint. 2. Install the PT joint base to installation surface, and then install the PT joint bracket back. 3. Fix the device to the PT joint bracket.

4. User Manual

Legal Information

©2022 Hangzhou Microimage Software Co., Ltd. All rights reserved.
About this Manual
The Manual includes instructions for using and managing the Product. Pictures, charts, images and all other information hereinafter are for description and explanation only.

The information contained in the Manual is subject to change, without notice, due to firmware updates or other reasons. Please find the latest version of this Manual at the HIKMICRO website (www.hikmicrotech.com/).
Please use this Manual with the guidance and assistance of professionals trained in supporting the Product.

Trademarks Acknowledgement

HIKMICRO and other HIKMICRO's trademarks and logos are the properties of HIKMICRO in various jurisdictions.

Other trademarks and logos mentioned are the properties of their respective owners.

LEGAL DISCLAIMER

TO THE MAXIMUM EXTENT PERMITTED BY APPLICABLE LAW, THIS MANUAL AND THE PRODUCT DESCRIBED, WITH ITS HARDWARE, SOFTWARE AND FIRMWARE, ARE PROVIDED "AS IS" AND "WITH ALL FAULTS AND ERRORS". HIKMICRO MAKES NO WARRANTIES, EXPRESS OR IMPLIED, INCLUDING WITHOUT LIMITATION, MERCHANTABILITY, SATISFACTORY QUALITY, OR FITNESS FOR A PARTICULAR PURPOSE. THE USE OF THE PRODUCT BY YOU IS AT YOUR OWN RISK. IN NO EVENT WILL HIKMICRO BE LIABLE TO YOU FOR ANY SPECIAL, CONSEQUENTIAL, INCIDENTAL, OR INDIRECT DAMAGES, INCLUDING, AMONG OTHERS, DAMAGES FOR LOSS OF BUSINESS PROFITS, BUSINESS INTERRUPTION, OR LOSS OF DATA, CORRUPTION OF SYSTEMS, OR LOSS OF DOCUMENTATION, WHETHER BASED ON BREACH OF CONTRACT, TORT (INCLUDING NEGLIGENCE), PRODUCT LIABILITY, OR OTHERWISE, IN CONNECTION WITH THE USE OF THE PRODUCT, EVEN IF HIKMICRO HAS BEEN ADVISED OF THE POSSIBILITY OF SUCH DAMAGES OR LOSS.

YOU ACKNOWLEDGE THAT THE NATURE OF THE INTERNET PROVIDES FOR INHERENT SECURITY RISKS, AND HIKMICRO SHALL NOT TAKE ANY RESPONSIBILITIES FOR ABNORMAL OPERATION, PRIVACY LEAKAGE OR OTHER DAMAGES RESULTING FROM CYBER-ATTACK, HACKER ATTACK, VIRUS INFECTION, OR OTHER INTERNET SECURITY RISKS; HOWEVER, HIKMICRO WILL PROVIDE TIMELY TECHNICAL SUPPORT IF REQUIRED.

YOU AGREE TO USE THIS PRODUCT IN COMPLIANCE WITH ALL APPLICABLE LAWS, AND YOU ARE SOLELY RESPONSIBLE FOR ENSURING THAT YOUR USE CONFORMS TO THE APPLICABLE LAW. ESPECIALLY, YOU ARE RESPONSIBLE, FOR USING THIS PRODUCT IN A MANNER THAT DOES NOT INFRINGE ON THE RIGHTS OF THIRD PARTIES, INCLUDING WITHOUT LIMITATION, RIGHTS OF PUBLICITY, INTELLECTUAL PROPERTY RIGHTS, OR DATA PROTECTION AND OTHER PRIVACY RIGHTS. YOU SHALL NOT USE THIS PRODUCT FOR ANY PROHIBITED END-USES, INCLUDING THE DEVELOPMENT OR PRODUCTION OF WEAPONS OF MASS DESTRUCTION, THE DEVELOPMENT OR PRODUCTION OF CHEMICAL OR BIOLOGICAL WEAPONS, ANY ACTIVITIES IN THE CONTEXT RELATED TO ANY NUCLEAR EXPLOSIVE OR UNSAFE NUCLEAR FUEL-CYCLE, OR IN SUPPORT OF HUMAN RIGHTS ABUSES.

IN THE EVENT OF ANY CONFLICTS BETWEEN THIS MANUAL AND THE APPLICABLE LAW, THE LATTER PREVAILS.

Regulatory Information

FCC Information

Note: This equipment has been tested and found to comply with the limits for a Class A digital device, pursuant to part 15 of the FCC Rules. These limits are designed to provide reasonable protection against harmful interference when the equipment is operated in a commercial environment. This equipment generates, uses, and can radiate radio frequency energy and, if not installed and used in accordance with the instruction manual, may cause harmful interference to radio communications. Operation of this equipment in a residential area is likely to cause harmful interference in which case the user will be required to correct the interference at his own expense.
Please take attention that changes or modification not expressly approved by the party responsible for compliance could void the user's authority to operate the equipment.
This device complies with Part 15 of the FCC Rules. Operation is subject to the following two conditions:
(1) This device may not cause harmful interference, and
(2) This device must accept any interference received, including interference that may cause undesired operation.

EU Conformity Statement

This product and - if applicable - the supplied accessories too are marked with "CE" and comply therefore with the applicable harmonized European standards listed under the,Directive 2014/30/EU(EMCD), Directive 2014/35/EU(LVD), Directive 2011/65/EU(RoHS).
For the model that supports 433 MHz wireless transmission, it should also comply with Directive 2014/53/EU (RED). The frequency bands and transmitting power (radiated and/or conducted) nominal limits are as follows: 433.1 MHz to 433.7 MHz.

Warning: This is a class A product. In a domestic environment this product may cause radio interference in which case the user may be required to take adequate measures.

Directive 2012/19/EU (WEEE Directive): Products marked with this symbol cannot be disposed of as unsorted municipal waste in the European Union. For proper recycling, return this product to your local supplier upon the purchase of equivalent new equipment, or dispose of it at designated collection points. For more information see: www.recyclethis.info

2006/66/EC (battery directive): This product contains a battery that cannot be disposed of as unsorted municipal waste in the European Union. See the product documentation for specific battery information. The

battery is marked with this symbol, which may include lettering to indicate cadmium (Cd), lead (Pb), or mercury (Hg). For proper recycling, return the battery to your supplier or to a designated collection point. For more information see: www.recyclethis.info.

Industry Canada ICES-003 Compliance

This device meets the CAN ICES-3 (A)/NMB-3(A) standards requirements.

This device complies with Industry Canada licence-exempt RSS standard(s). Operation is subject to the following two conditions:

(1) this device may not cause interference, and

(2) this device must accept any interference, including interference that may cause undesired operation of the device.

Le présent appareil est conforme aux CNR d'Industrie Canada applicables aux appareils radioexempts de licence.

L'exploitation est autorisée aux deux conditions suivantes :

(1) l'appareil ne doit pas produire de brouillage, et

(2) l'utilisateur de l'appareil doit accepter tout brouillage radioélectrique subi, même si le brouillage est susceptible d'en compromettre le fonctionnement.

This equipment complies with IC RSS-102 radiation exposure limits set forth for an uncontrolled environment.

ce matériel est conforme aux limites de dose d'exposition aux rayonnements, CNR-102 énoncée dans un autre environnement.

KC

이 기기는 업무용 환경에서 사용할 목적으로 적합성평가를 받은 기기로서 가정용 환경에서 사용하는 경우 전파간섭의 우려가 있습니다.

Safety Instruction

These instructions are intended to ensure that user can use the product correctly to avoid danger or property loss.

Laws and Regulations

- Use of the product must be in strict compliance with the local electrical safety regulations.

Transportation

- Keep the device in original or similar packaging while transporting it.
- Keep all wrappers after unpacking them for future use. In case of any failure occurred, you need to return the device to the factory with the original wrapper. Transportation without the original wrapper may result in damage on the device and the company shall not take any responsibilities.
- DO NOT drop the product or subject it to physical shock. Keep the device away from magnetic interference.
- A statement about protection impairment if used in a manner not specified by the manufacturer.

Power Supply

- Please purchase the charger by

yourself. Input voltage should meet the Limited Power Source (12 VDC) according to the IEC62368 standard. Please refer to technical specifications for detailed information.

- Make sure the plug is properly connected to the power socket.
- The socket-outlet shall be installed near the equipment and shall be easily accessible.
- DO NOT connect multiple devices to one power adapter, to avoid over-heating or fire hazards caused by overload.

Battery

- Risk of explosion if the battery is replaced by an incorrect type. Dispose of used batteries according to the instructions. Il y a risque d'explosion si la batterie est remplacée par une batterie de type incorrect. Mettre au rebut les batteries usagées conformément aux instructions.
- Improper replacement of the battery with an incorrect type may defeat a safeguard (for example, in the case of some lithium battery types).
- DO NOT dispose of the battery into fire or a hot oven, or mechanically crush or cut the battery, which may result in an explosion.
- DO NOT leave the battery in an extremely high temperature surrounding environment, which may result in an explosion or the leakage of flammable liquid or gas.
- DO NOT subject the battery to extremely low air pressure, which may result in an explosion or the leakage of flammable liquid or gas.

Installation

- Never place the equipment in an unstable location. The equipment may fall, causing serious personal injury or death.

System Security

- You acknowledge that the nature of Internet provides for inherent security risks, and our company shall not take any responsibilities for abnormal operation, privacy leakage or other damages resulting from cyber attack, hacker attack, however, our company will provide timely technical support if required.
- Please enforce the protection for the personal information and the data security as the device may be confronted with the network security problems when it is connected to the Internet. Please contact us when the device might exist network security risks.
- Please understand that you have the responsibility to configure all the passwords and other security settings about the device, and keep your user name and password.

Maintenance

- If the product does not work properly, please contact your dealer or the nearest service center. We shall not assume any responsibility for problems

caused by unauthorized repair or maintenance.

- A few device components (e.g., electrolytic capacitor) require regular replacement. The average lifespan varies, so periodic checking is recommended. Contact your dealer for details.
- Wipe the device gently with a clean cloth and a small quantity of ethanol, if necessary.
- If the equipment is used in a manner not specified by the manufacturer, the protection provided by the device may be impaired.
- The serial port of the equipment is used for debugging only.

Using Environment

- Make sure the running environment meets the requirement of the device. The operating temperature shall be -20°C to 45°C (-4°F to 113°F), and the operating humidity shall be 95% or less, no condensing.
- DO NOT expose the device to high electromagnetic radiation or dusty environments.
- DO NOT aim the lens at the sun or any other bright light.
- The equipment shall not be exposed to dripping or splashing and that no objects filled with liquids, such as vases, shall be placed on the equipment.
- No naked flame sources, such as lighted candles, should be placed on the equipment.
- Burned fingers when handling the parts with this symbol ⚠. Wait one-half hour after switching off before handling the parts.

Emergency

- If smoke, odor, or noise arises from the device, immediately turn off the power, unplug the power cable, and contact the service center.

Manufacture Address

Room 313, Unit B, Building 2, 399 Danfeng Road, Xixing Subdistrict,Binjiang District, Hangzhou, Zhejiang 310052, China
Hangzhou Microimage Software Co., Ltd.

COMPLIANCE NOTICE: The thermal series products might be subject to export controls in various countries or regions, including without limitation, the United States, European Union, United Kingdom and/or other member countries of the Wassenaar Arrangement. Please consult your professional legal or compliance expert or local government authorities for any necessary export license requirements if you intend to transfer, export, re-export the thermal series products between different countries.

Deutsch

Français

Español

Português

Italiano

Čeština

Slovenčina

Polski

Magyar

Română

Nederlands

Dansk

1.

Norsk

1.

Suomi

1

Svenska

1.

Русский

1.

Türkçe

日本語

1.

한국인

1.

繁體中文

1

HIKMICRO

See the World in a New Way