Handheld Thermography Camera

User Manual

Legal Information

©2021 Hangzhou Microimage Software Co., Ltd. All rights reserved.

About this Manual

The Manual includes instructions for using and managing the Product. Pictures, charts, images and all other information hereinafter are for description and explanation only. The information contained in the Manual is subject to change, without notice, due to firmware updates or other reasons. Please find the latest version of this Manual at the HIKMICRO website (***http://www.hikmicrotech.com***).
Please use this Manual with the guidance and assistance of professionals trained in supporting the Product.

Trademarks

HIKMICRO and other HIKMICRO's trademarks and logos are the properties of HIKMICRO in various jurisdictions.
Other trademarks and logos mentioned are the properties of their respective owners.

Disclaimer

TO THE MAXIMUM EXTENT PERMITTED BY APPLICABLE LAW, THIS MANUAL AND THE PRODUCT DESCRIBED, WITH ITS HARDWARE, SOFTWARE AND FIRMWARE, ARE PROVIDED "AS IS" AND "WITH ALL FAULTS AND ERRORS". HIKMICRO MAKES NO WARRANTIES, EXPRESS OR IMPLIED, INCLUDING WITHOUT LIMITATION, MERCHANTABILITY, SATISFACTORY QUALITY, OR FITNESS FOR A PARTICULAR PURPOSE. THE USE OF THE PRODUCT BY YOU IS AT YOUR OWN RISK. IN NO EVENT WILL HIKMICRO BE LIABLE TO YOU FOR ANY SPECIAL, CONSEQUENTIAL, INCIDENTAL, OR INDIRECT DAMAGES, INCLUDING, AMONG OTHERS, DAMAGES FOR LOSS OF BUSINESS PROFITS, BUSINESS INTERRUPTION, OR LOSS OF DATA, CORRUPTION OF SYSTEMS, OR LOSS OF DOCUMENTATION, WHETHER BASED ON BREACH OF CONTRACT, TORT (INCLUDING NEGLIGENCE), PRODUCT LIABILITY, OR OTHERWISE, IN CONNECTION WITH THE USE OF THE PRODUCT, EVEN IF HIKMICRO HAS BEEN ADVISED OF THE POSSIBILITY OF SUCH DAMAGES OR LOSS.
YOU ACKNOWLEDGE THAT THE NATURE OF THE INTERNET PROVIDES FOR INHERENT SECURITY RISKS, AND HIKMICRO SHALL NOT TAKE ANY RESPONSIBILITIES FOR ABNORMAL OPERATION, PRIVACY LEAKAGE OR OTHER DAMAGES RESULTING FROM CYBER-ATTACK, HACKER ATTACK, VIRUS INFECTION, OR OTHER INTERNET SECURITY RISKS; HOWEVER, HIKMICRO WILL PROVIDE TIMELY TECHNICAL SUPPORT IF REQUIRED.
YOU AGREE TO USE THIS PRODUCT IN COMPLIANCE WITH ALL APPLICABLE LAWS, AND YOU ARE SOLELY RESPONSIBLE FOR ENSURING THAT YOUR USE CONFORMS TO THE APPLICABLE LAW. ESPECIALLY, YOU ARE RESPONSIBLE, FOR USING THIS PRODUCT IN A MANNER THAT DOES NOT INFRINGE ON THE RIGHTS OF THIRD PARTIES, INCLUDING WITHOUT LIMITATION, RIGHTS OF PUBLICITY, INTELLECTUAL PROPERTY RIGHTS, OR DATA PROTECTION AND OTHER PRIVACY RIGHTS. YOU SHALL NOT USE THIS PRODUCT FOR ANY PROHIBITED END-USES, INCLUDING THE DEVELOPMENT OR PRODUCTION OF WEAPONS OF MASS DESTRUCTION, THE DEVELOPMENT OR

PRODUCTION OF CHEMICAL OR BIOLOGICAL WEAPONS, ANY ACTIVITIES IN THE CONTEXT RELATED TO ANY NUCLEAR EXPLOSIVE OR UNSAFE NUCLEAR FUEL-CYCLE, OR IN SUPPORT OF HUMAN RIGHTS ABUSES.

IN THE EVENT OF ANY CONFLICTS BETWEEN THIS MANUAL AND THE APPLICABLE LAW, THE LATTER PREVAILS.

Regulatory Information

FCC Information

Please take attention that changes or modification not expressly approved by the party responsible for compliance could void the user's authority to operate the equipment.
FCC compliance: This equipment has been tested and found to comply with the limits for a Class B digital device, pursuant to part 15 of the FCC Rules. These limits are designed to provide reasonable protection against harmful interference in a residential installation. This equipment generates, uses and can radiate radio frequency energy and, if not installed and used in accordance with the instructions, may cause harmful interference to radio communications. However, there is no guarantee that interference will not occur in a particular installation. If this equipment does cause harmful interference to radio or television reception, which can be determined by turning the equipment off and on, the user is encouraged to try to correct the interference by one or more of the following measures:
—Reorient or relocate the receiving antenna.
—Increase the separation between the equipment and receiver.
—Connect the equipment into an outlet on a circuit different from that to which the receiver is connected.
—Consult the dealer or an experienced radio/TV technician for help

FCC Conditions
This device complies with part 15 of the FCC Rules. Operation is subject to the following two conditions:
1. This device may not cause harmful interference.
2. This device must accept any interference received, including interference that may cause undesired operation.

EU Conformity Statement

This product and - if applicable - the supplied accessories too are marked with "CE" and comply therefore with the applicable harmonized European standards listed under the EMC Directive 2014/30/EU, RE Directive 2014/53/EU, the RoHS Directive 2011/65/EU

2012/19/EU (WEEE directive): Products marked with this symbol cannot be disposed of as unsorted municipal waste in the European Union. For proper recycling, return this product to your local supplier upon the purchase of equivalent new equipment, or dispose of it at designated collection points. For more information see: www.recyclethis.info

2006/66/EC (battery directive): This product contains a battery that cannot be disposed of as unsorted municipal waste in the European Union. See the product documentation for specific battery information. The battery is marked with this symbol, which may include lettering to indicate cadmium (Cd), lead (Pb), or mercury (Hg). For proper recycling, return the battery to your supplier or to a designated collection point. For more information see:www.recyclethis.info

Industry Canada ICES-003 Compliance

This device meets the CAN ICES-3 (B)/NMB-3(B) standards requirements.

1. This device complies with Industry Canada licence-exempt RSS standard(s). Operation is subject to the following two conditions: this device may not cause interference, and
2. this device must accept any interference, including interference that may cause undesired operation of the device.

1. Le présent appareil est conforme aux CNR d'Industrie Canada applicables aux appareils radioexempts de licence. L'exploitation est autorisée aux deux conditions suivantes : l'appareil ne doit pas produire de brouillage, et
2. l'utilisateur de l'appareil doit accepter tout brouillage radioélectrique subi, même si le brouillage est susceptible d'en compromettre le fonctionnement.

Under Industry Canada regulations, this radio transmitter may only operate using an antenna of a type and maximum (or lesser) gain approved for the transmitter by Industry Canada. To reduce potential radio interference to other users, the antenna type and its gain should be so chosen that the equivalent isotropically radiated power (e.i.r.p.) is not more than that necessary for successful communication.
Conformément à la réglementation d'Industrie Canada, le présent émetteur radio peut fonctionner avec une antenne d'un type et d'un gain maximal (ou inférieur) approuvé pour l'émetteur par Industrie Canada. Dans le but de réduire les risques de brouillage radioélectrique à l'intention des autres utilisateurs, il faut choisir le type d'antenne et son gain de sorte que la puissance isotrope rayonnée équivalente (p.i.r.e.) ne dépasse pas l'intensité nécessaire à l'établissement d'une communication satisfaisante.

Symbol Conventions

The symbols that may be found in this document are defined as follows.

Symbol	Description
Danger	Indicates a hazardous situation which, if not avoided, will or could result in death or serious injury.
Caution	Indicates a potentially hazardous situation which, if not avoided, could result in equipment damage, data loss, performance degradation, or unexpected results.
Note	Provides additional information to emphasize or supplement important points of the main text.

Safety Instruction

These instructions are intended to ensure that user can use the product correctly to avoid danger or property loss.

Laws and Regulations

- Use of the product must be in strict compliance with the local electrical safety regulations.

Transportation

- Keep the device in original or similar packaging while transporting it.
- Keep all wrappers after unpacking them for future use. In case of any failure occurred, you need to return the device to the factory with the original wrapper. Transportation without the original wrapper may result in damage on the device and the company shall not take any responsibilities.
- DO NOT drop the product or subject it to physical shock. Keep the device away from magnetic interference.

Power Supply

- Please purchase the charger by yourself. Input voltage should meet the Limited Power Source (5 VDC, 700 mA) according to the IEC61010-1 standard. Please refer to technical specifications for detailed information.
- Make sure the plug is properly connected to the power socket.
- DO NOT connect multiple devices to one power adapter, to avoid over-heating or fire hazards caused by overload.

Battery

- Improper use or replacement of the battery may result in explosion hazard. Replace with the same or equivalent type only. Dispose of used batteries in conformance with the instructions provided by the battery manufacturer.
- The built-in battery cannot be dismantled. Please contact the manufacture for repair if necessary.
- For long-term storage of the battery, make sure it is fully charged every half year to ensure the battery quality. Otherwise, damage may occur.
- When the device is powered off and the RTC battery is full, the time settings can be kept for 2 months.
- In the first use, power on the device and charge the RTC battery with the lithium battery for more than 8 hours.
- The lithium battery voltage is 3.7 V, and the battery capacity is 5000 mAh.
- The battery is certified by UL2054.

Maintenance

- If the product does not work properly, please contact your dealer or the nearest service center. We shall not assume any responsibility for problems caused by unauthorized repair or

maintenance.

- A few device components (e.g., electrolytic capacitor) require regular replacement. The average lifespan varies, so periodic checking is recommended. Contact your dealer for details.
- Wipe the device gently with a clean cloth and a small quantity of ethanol, if necessary.
- If the equipment is used in a manner not specified by the manufacturer, the protection provided by the device may be impaired.
- Please notice that the current limit of USB 3.0 PowerShare port may vary with the PC brand, which is likely to result in incompatibility issue. Therefore, it's advised to use regular USB 3.0 or USB 2.0 port if the USB device fails to be recognized by PC via USB 3.0 PowerShare port.
- We recommend you send the device back for calibration once a year, and please contact the local dealer for the information on maintenance points.

Using Environment

- DO NOT expose the device to extremely hot, cold, dusty, corrosive, saline-alkali, or damp environments. Make sure the running environment meets the requirement of the device. The operating temperature shall be -10°C to 50°C (14°F to 122°F), and the operating humidity shall be 90% or less.
- This device can only be safely used in the region below 2000 meters above the sea level.
- Place the device in a dry and well-ventilated environment.
- DO NOT expose the device to high electromagnetic radiation or dusty environments.
- DO NOT aim the lens at the sun or any other bright light.
- When any laser equipment is in use, make sure that the device lens is not exposed to the laser beam, or it may burn out.
- The device is suitable for indoor conditions.
- The pollution degree is 2.
- Overvoltage category: 0 for Handheld Thermography Camera.
- Overvoltage category: II for power adapter.

Technical Support

The ***https://www.hikmicrotech.com*** portal will help you as a HIKMICRO customer to get the most out of your HIKMICRO products. The portal gives you access to our support team, software and documentation, service contacts, etc.

Emergency

- If smoke, odor, or noise arises from the device, immediately turn off the power, unplug the power cable, and contact the service center.

Laser Light Supplement Warning

Warning: The laser radiation emitted from the device can cause eye injuries, burning of skin or inflammable substances. Prevent eyes from direct laser. Before enabling the Light Supplement

function, make sure no human or inflammable substances are in front of the laser lens. The wave length is 650 nm, and the power is less than 1 Mw. The laser meets the IEC60825-1:2014 standard. Laser maintenance: It is not necessary to maintain the laser regularly. If the laser does not work, the laser assembly needs to be replaced in the factory under warranty. Keep the device power off when replacing laser assembly. Caution-Use of controls or adjustments or performance of procedures other than those specified herein may result in hazardous radiation exposure.

Manufacture Address

Room 313, Unit B, Building 2, 399 Danfeng Road, Xixing Subdistrict,Binjiang District, Hangzhou, Zhejiang 310052, China
Hangzhou Microimage Software Co., Ltd
COMPLIANCE NOTICE: The thermal series products might be subject to export controls in various countries or regions, including without limitation, the United States, European Union, United Kingdom and/or other member countries of the Wassenaar Arrangement. Please consult your professional legal or compliance expert or local government authorities for any necessary export license requirements if you intend to transfer, export, re-export the thermal series products between different countries.

Contents

Chapter 1 Overview **1**
1.1 Device Description 1
1.2 Main Function 1
1.3 Appearance 2
Chapter 2 Preparation **5**
2.1 Charge Device 5
2.1.1 Charge Device via Charging Base 5
2.1.2 Charge Device via Cable Interface 6
2.2 Power On/Off 7
2.2.1 Set Auto Power-off Duration 7
2.3 Operation Method 7
2.4 Menu Description 8
Chapter 3 Display Settings **9**
3.1 Focus Lens 9
3.2 Set Screen Brightness 9
3.3 Set Display Mode 9
3.4 Set Palettes 10
3.5 Adjust Digital Zoom 11
3.6 Display OSD Info 12
Chapter 4 Temperature Measurement **13**
4.1 Set Thermography Parameters 13
4.1.1 Set Unit 14
4.2 Set Temperature Range 14
4.3 Set Thermography Rule 15
4.3.1 Set Point Rule 15
4.3.2 Set Line Rule 16
4.3.3 Set Frame Rule 16
4.3.4 Delete Rules 17
4.4 Temperature Alarm 17

4.4.1 Mark Targets of Alarm Temperature on Screen 17
4.4.2 Set Alarm for Thermography Rules or Pixel-to-Pixel Thermometry 18
Chapter 5 Picture and Video **19**
5.1 Capture Picture 19
5.2 Record Video 20
5.3 View Recorded Files 21
5.4 Export Files 22
Chapter 6 Connect Bluetooth **23**
Chapter 7 Light Settings **24**
7.1 Set LED Light 24
7.2 Set Laser 24
Chapter 8 Thermal View APP Connection **25**
8.1 Connect via Wi-Fi 25
8.2 Connect via Hot Spot 26
Chapter 9 Maintenance **28**
9.1 View Device Information 28
9.2 Set Date and Time 28
9.3 Upgrade Device 28
9.4 Restore Device 28
Chapter 10 Appendix **29**
10.1 Common Material Emissivity Reference 29
10.2 Device Command 29
10.3 Device Communication Matrix 30
10.4 FAQ 30

Chapter 1 Overview

1.1 Device Description

The handheld thermography camera is a device with both optical images and thermal images. It can do thermography, video recording, snapshot capturing, alarm, and it can connect to Wi-Fi, hotspot and Bluetooth. The built-in high-sensitivity IR detector and high-performance sensor detects the variation of temperature and measure the real-time temperature. The temperature measurement range is -20 °C to 550 °C (-4 °F to 1022 °F) with the accuracy of ± 2 °C (± 3.6 °F) or ± 2% when the ambient temperature is 15°C to 35 °C (59 °F to 95 °F) and the object temperature is above 0 °C (32 °F).
The picture-in-picture technique of the camera and the fusion of optical view and thermal view, enhances the details of the images display. It supports multiple palettes and alarm types. When the detected temperature in the scene does not match with the alarm rules, the device alarms by color of the palette mode automatically. It helps to find the risky part and lower your property loss, but it can not be used for human body temperature test.
The device is easy to use, and adopts ergonomic design. It is widely applied to substations, electricity prevention detection of companies, and reconnaissance survey of construction field.

1.2 Main Function

Thermography

Device detects the real-time temperature, and display it on the screen.

Storage

Device is equipped with memory module to store videos, snapshots, and important data.

Fusion

Device can display fusion of thermal view and optical view.

Palette and Alarm

Device supports multiple palettes, and you can set the palette mode according to the alarm function.

Client Software Connection

- Mobile Phone: Use HIKMICRO Viewer to see live image, capture, and recording, etc. on your phone.
- PC: Use HIKMICRO Analyzer to see live image, capture, recording, and receive alarm message, etc., on your PC.

Bluetooth

Device can be connected to headset via Bluetooth, and you can hear the voice in the recording or capture.

Digital Zoom

Device supports 1×, 2×, 4×, and 8× digital zoom.

LED Light

LED light supplement makes the device a torch in required scenarios.

Laser Light

Long-distance laser light supplement.

1.3 Appearance

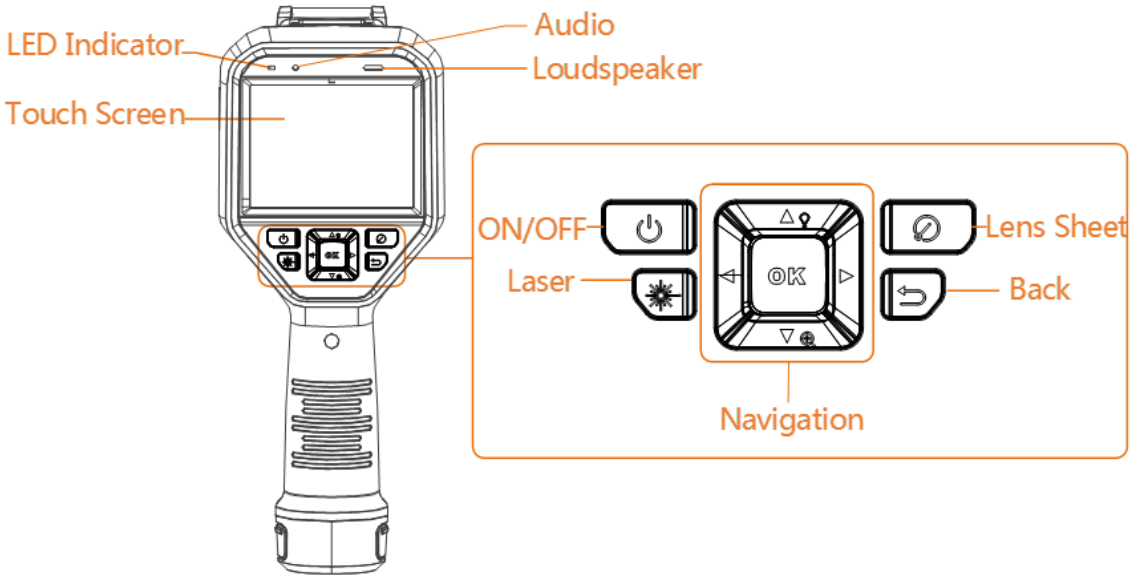

Figure 1-1 Appearance

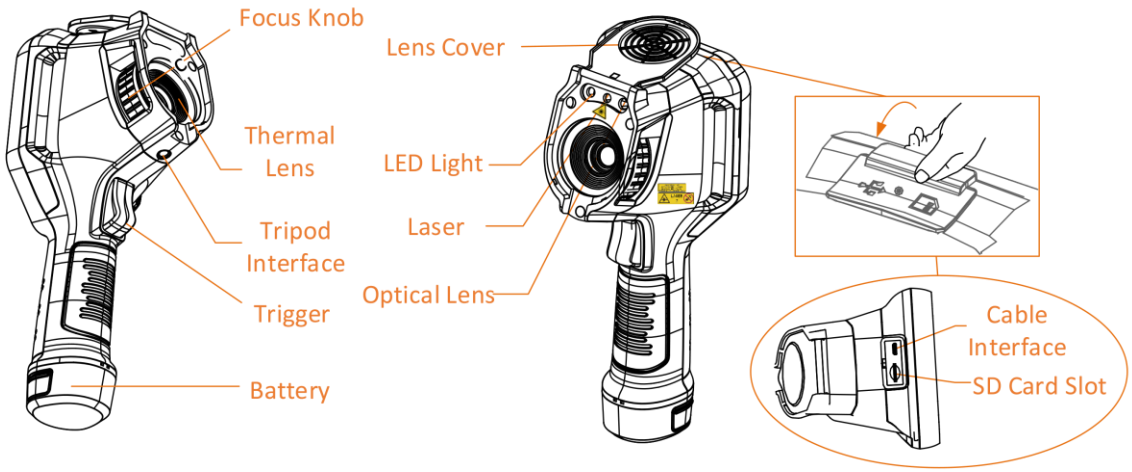

Note

The warning sign is under the laser and on the left of the device.

Table 1-1 Interface Description

Component	Function
Laser Button	Hold the button to turn on laser, and release the button to turn off laser.
Navigation Button	Menu Mode: ● Press △,▽, ▷ and ◁ to select parameters. ● Press OK to confirm.
	Non-Menu Mode: ● Press △ to turn on/off the LED light supplement. ● Press ▽ to start digital zoom.
Lens Sheet Button	Cover the lens to perform the correction.
Back Button	Exit the menu or return to previous menu.
Focus Knob	Adjust lens focal length. Refer to ***Focus Lens***.
Trigger	Pull the trigger to capture. Hold the trigger to record videos.
Cable Interface	Connect the device to your PC via cable to export files.

Caution

The laser radiation emitted from the device can cause eye injuries, burning of skin or inflammable substances. Before enabling the light supplement function, make sure no human or inflammable substances are in front of the laser lens.

Chapter 2 Preparation

2.1 Charge Device

Caution

The built-in cell battery that powers the real time clock (RTC) of the device may drain during longtime transportation or storage. It is recommended to recharge the RTC battery for the well-functioning of the device clock.

To fully charge the RTC battery, the following requirements should be met:

- The rechargeable lithium batteries should be installed on the device.
- The device should keep working for more than 8 hours before shutting down.

2.1.1 Charge Device via Charging Base

Steps

Note

Please charge the device with the cable and power adapter supplied by the manufacturer (or according to the input voltage from the specifications).

1. Hold the device, and press both battery lock catches of the device.

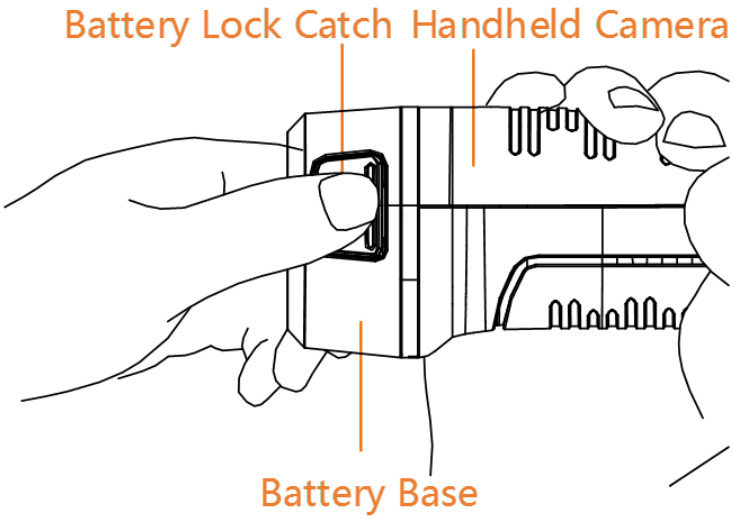

Figure 2-1 Remove Battery

2. Hold the lock catches, and draw the battery base to take out the battery.
3. Insert the battery into the charging base. You can see the charging status via the pilot lamp on the charging base.

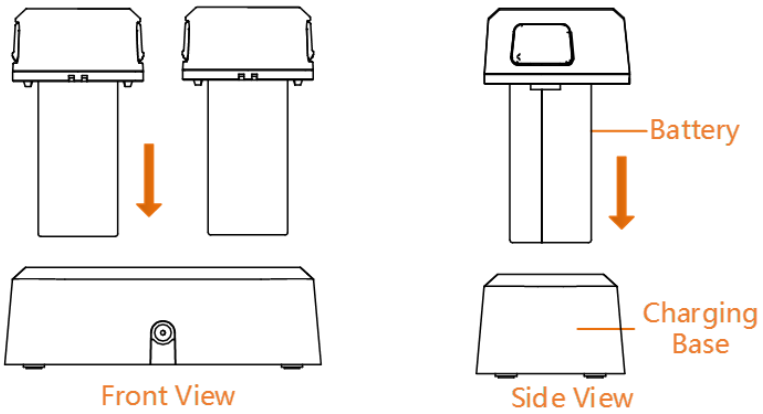

Figure 2-2 Charge Battery

4. When the battery is fully charged, draw the battery from the charging base.
5. Align the ribbed piece on battery with the notch of the device, and insert battery into the device.

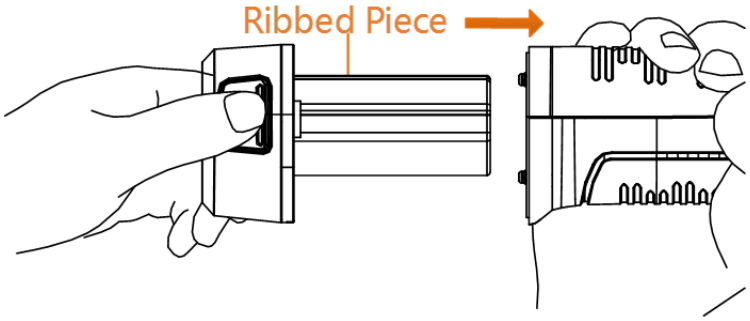

Figure 2-3 Insert Battery

2.1.2 Charge Device via Cable Interface

Before You Start

Please make sure the battery is installed before charging.

Steps

1. Open the top cover of the device.
2. Connect the interface and the power adaptor with Type-C or USB cable.

2.2 Power On/Off

Power On

Remove the lens cover, and hold ⏻ for over three seconds to turn on the device. You can observe the target when the interface of the device is stable.

Note

It may take at least 30 s until the device is ready for using when you power on it.

Power Off

When the device is turned on, hold ⏻ for three seconds to power off the device.

2.2.1 Set Auto Power-off Duration

Go to **Local Settings** → **Device Settings** → **Auto Off** to set the automatic shutdown time for device as required.

2.3 Operation Method

The device supports both touch-screen control and button control.

Touch-screen control

Tap on the screen to set parameters and configurations.

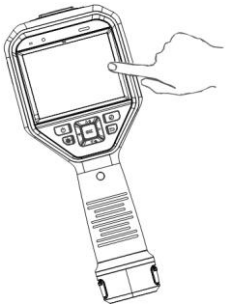

Figure 2-4 Touch-screen Control

Button control

Press the navigation buttons to set parameters and configurations.

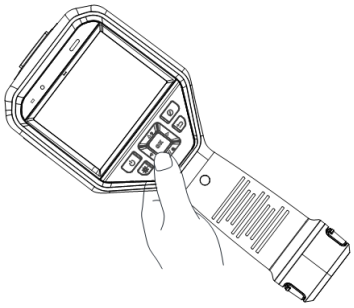

Figure 2-5 Button Control

- Press △, ▽, ◁, and ▷ to move the cursor up/down/left/right.
- Press OK to confirm.

2.4 Menu Description

In the observation interface, tap the screen or press OK to show the menu bar.

Figure 2-6 Menu

Chapter 3 Display Settings

3.1 Focus Lens

Adjust the lens focal length properly before you set any other configurations, or it may affect the image display and temperature accuracy.

Steps

1. Power on the device.
2. Aim the device lens to the appropriate scene.
3. Adjust the focus knob clockwise or anticlockwise, see figure below.

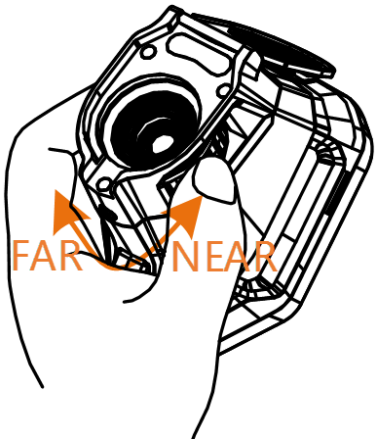

Figure 3-1 Focus Lens

Note

DO NOT touch the lens to avoid affecting the display effect.

3.2 Set Screen Brightness

Go to **Settings** → **Device Settings** → **Display Brightness** to adjust the screen brightness.

3.3 Set Display Mode

You can set the thermal/optical view of the device. **Thermal**, **Fusion**, **PIP**, and **Optical** are selectable.

Steps

1. Select from the main menu.
2. Tap on the icons to select a view mode.

In thermal mode, the device displays the thermal view.

In fusion mode, the device displays the combined view of thermal channel and optical channel.

Note

You can press ▷ and ◁ to set the fusion distance. Or go to **Local Settings** → **Image Settings** → **Parallax Correction** to select the fusion distance.

In PiP (Picture in Picture) mode, the device displays thermal view inside the optical view.

Note

You can press ▷ and ◁ to set the PiP proportion. Or go to **Local Settings** → **Image Settings** → **PiP Proportion** to set the value.

In optical mode, the device displays the optical view.

3. Press to exit.

3.4 Set Palettes

The palettes allow you to select the desired colors.

Steps

1. Select from the main menu.

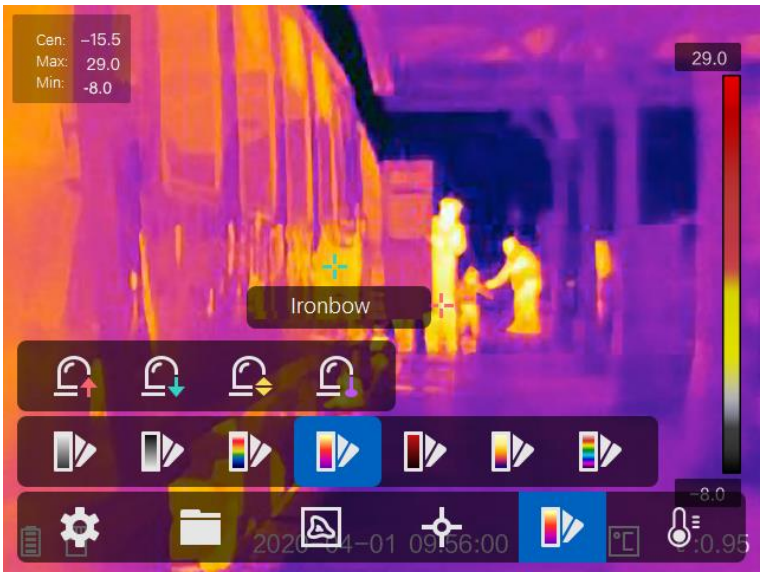

Figure 3-2 Palette

2. Tap on the icons to select a palette type.

White Hot

The hot part is light-colored in view.

Black Hot

The hot part is black-colored in view.

Rainbow

The target displays multiple colors, it is suitable for scene without obvious temperature difference.

Ironbow

The target is colored as heated iron.

Red Hot

The hot part is red-colored in view.

Fusion

The hot part is yellow-colored and the cold part is purple-colored in view.

Rain

The hot part in the image are colored, and the else is blue.

3. Press to exit the setting interface.

3.5 Adjust Digital Zoom

In the live view interface, press ▽ to adjust the digital zoom to 1×, 2×, 4×, or 8×. Then you can view the target or scene in larger size.

3.6 Display OSD Info

Go to **Settings** → **Image Settings** → **Display Settings** to enable the information on-screen display.

Status Icon

The device status icons, for example, battery status, memory card, hotspot, etc.

Time

Device time and date.

Parameters

Thermography parameters, for example, target emissivity, temperature unit, etc.

Distance Value

Laser-measured target distance.

Note

It is only supported by device models with laser distance measuring function.

Watermark

The watermark is a manufacturer logo displayed on the upper right corner of the screen.

Chapter 4 Temperature Measurement

The thermography (temperature measurement) function provides the real-time temperature of the scene and display it on the left of your screen. The thermography function is turned on by default.

4.1 Set Thermography Parameters

You can set thermography parameters to improve the accuracy of temperature measurement.

Steps

1. Go to **Local Settings** → **Thermography Settings**.
2. Set the **Thermography Range**, and **Emissivity**, etc.

Thermography Range

Select the temperature measurement range. The device can detect the temperature and switch thermography range automatically in **Auto Switch** mode.

Emissivity

Refer to ***Common Material Emissivity Reference*** to set the emissivity of your target.

Reflection Temperature

If any object (not the target) of high temperature is in the scene, and the target emissivity is low, set the reflection temperature as the high temperature to correct the thermography effect.

Distance

The distance between the target and the device. You can customize the target distance or select the target distance as **Near**, **Middle**, or **Far**.

Environment Temperature

The average temperature of the environment.

Humidity

Set the relative humidity of current environment.

Note

Go to **Local Settings** → **Image Settings** → **Display Settings** to enable/disable the emissivity display.

3. Return to previous menu to save the settings.

Note

You can go to **Local Settings** → **Device Settings** → **Device Initialization** → **Measurement Tool Initialization** to initialize the temperature measurement parameters.

4.1.1 Set Unit

Go to **Local Settings** → **Device Settings** → **Unit** to set the temperature unit and distance unit.

Note

You can go to **Local Settings** → **Image Settings** → **Display Settings** to enable/disable the temperature display.

4.2 Set Temperature Range

Set a temperature section and the palette only works for targets within the temperature section. You can adjust the temperature range.

Steps

1. Select from the main menu.
2. Select auto adjustment or manual adjustment .

Auto Adjustment	Select , and press OK. The device adjusts temperature range parameters automatically.

Manual Adjustment	Select , and press OK.
	There are 2 ways to manually adjust the range:
	● Adjust the temperature range based on selected area.
	Tap on an interest area of the screen. A circle is displayed around the area, and the palette readjusts to the temperature range of the area.
	● Adjust the maximum and minimum temperature of the range.
	  ● Press ◁ or ▷ to select the max. temperature, min. temperature, or both. You can also tap on the max. temperature or min. temperature at the ends of the palette bar to select them.
	  ● Press △ or ▽ adjust the temperature value. You can also tap on the arrows on the right side of the screen to adjust the temperature value.

3. Press to exit.

4.3 Set Thermography Rule

You can set thermography parameters to improve the accuracy of temperature measurement.

Steps

1. Select from the main menu.
2. Set the point, line, or frame rules.

   The configured rule numbers are displayed near the rule icon.

Figure 4-1 Thermography Rule Settings

4.3.1 Set Point Rule

You can set four types of point thermography rules.

Table 4-1 Icon Description

Icon	Description
	Center Point Thermography
	High-temperature Point Thermography
	Low-temperature Point Thermography
	Custom Point Thermography

The setting method of center point, high-temperature, and low-temperature point thermography are all the same. Here is the example of setting high-temperature point thermography.

Example

Tap on the interface, the device locates the point of the highest temperature, and displays Max: XX.

Custom Point Thermography

The device can detect the temperature of a custom point.

Steps

1. Select .
2. Press OK.

3. Move the point with the navigation buttons or tap on the touch-screen to select a point.
4. Press OK.
   The temperature of custom point (e.g. P1) displays P1: XX.
5. Repeat step 1 to 3 to set other custom points.

Note

At most ten custom points supported.

4.3.2 Set Line Rule

Steps

1. Select .
2. Press OK to generate a default line.
3. Press △, ▽, ◁, and ▷ to move the line up/down/left/right.
4. Drag points of the line on the touch-screen to extend or shorten the line.
5. Press OK.

Note

Only one line is supported.

The maximum temperature, minimum temperature, and average temperature of the line display in the top left corner of the screen. The real-time temperature trend chart will display near the line.

What to do next

Displayed temperature types for the rule are configurable at **Local Settings** → **Thermography Settings** → **Temperature Display**.

4.3.3 Set Frame Rule

Steps

1. Select .
2. Press OK to generate a default frame.
3. Press △, ▽, ◁, and ▷ to move the frame up/down/left/right.
4. Press to enlarge the frame, and press to contract the frame. Or you can drag the corner of the frame on touch-screen to enlarge or contract the frame.
5. Press OK.
   The maximum temperature, minimum temperature, and average temperature of the framed area are displayed on the left of the screen.
6. Repeat steps to set other frames.

Note

At most three frames are supported.

What to do next

Displayed temperature types for the rule are configurable at **Local Settings** → **Thermography Settings** → **Temperature Display**.

4.3.4 Delete Rules

Delete All Rules

Tap and press OK to clear all temperature rules.

Delete One Rule

- In the rule setting mode, tap and choose the single rule you want to delete.
- In the observation interface, tap on a rule (point, line or frame) and enter the editing mode. Tap **Delete** to delete the rule.

4.4 Temperature Alarm

When the temperature of targets triggers the set alarm rule, the device will perform configured actions, such as, marking the alarming area with certain color, flashing the rule frame, making an audible warning, or sending notification to the client software.

4.4.1 Mark Targets of Alarm Temperature on Screen

After setting the temperature display rule, targets that meet the set rule are prominently displayed with a predefined color.

Steps

1. Select **Palettes** from the main menu.
2. Tap the icons to select an alarm rule type.

Table 4-2 Icon Description

Icon	Alarm Mode	Description
	Above Alarm	Set the alarm temperature, and the targets with the temperature higher than the set value are displayed in red.
	Below Alarm	Set the alarm temperature, and targets with the temperature lower than the set value are displayed in blue.

Icon	Alarm Mode	Description
	Interval Alarm	Set the alarm temperature section (e.g., 90 °C to 150 °C), and targets with the temperature in the range are displayed in yellow.
	Insulation Alarm	Set the alarm temperature section (e.g., 90 °C to 120 °C), targets with the temperature out of the section (e.g., 70 °C or 125 °C) are displayed in purple or blue.

3. Optional: Press △ and ▽ to select between upper limit and lower limit.
4. Press ◁ and ▷ to adjust the rule temperature.
5. Press ⊃ to exit.

4.4.2 Set Alarm for Thermography Rules or Pixel-to-Pixel Thermometry

Alarm actions, such as, audible warning, sending notification to the client software, are triggered when the tested temperature exceeds the set alarm or alert value.

Steps

1. Go to **Settings** → **Thermography Settings** → **Alarm Settings**.
2. Enable the function and set the alarm threshold, alert threshold, and audible warning.

Alarm Threshold

When the tested temperature exceeds the threshold, the device sends alarm notification to the client software. It beeps if the audible warning is enabled. The frame flashes red if the frame rule is configured.

Alert Threshold

When the tested temperature exceeds the threshold, the device sends alert notification to the client software.

Audible Warning

The device beeps when target temperature exceeds the alarm threshold.

Note

If the frame rules are set to measure temperature, the alarm threshold, alert threshold and audible warning settings only works in the framed areas. Otherwise, the parameters are valid for pixel-to-pixel thermometry (whole-screen thermometry).

Chapter 5 Picture and Video

Insert memory card into the device, then you can record videos, capture snapshots, and mark and save important data.

Note

- Device does not support capturing or recording when the menu is shown.
- When the device is connected to your PC, it does not support capturing or recording.
- Go to **Local Settings** → **Device Settings** → **Filename Header**, you can set the filename header for capturing or recording to distinguish the files recorded in a specify scene.

Go to **Local Settings** → **Device Settings** → **Device Initialization** to initialize the memory card if needed.

5.1 Capture Picture

Steps

1. Go to **Local Settings** → **Capture Settings**.
2. Select **Capture Mode** to set the capture mode.

Single Capture	Capture one picture for one time.
Continuous Capture	Capture multiple pictures for one time. You can set the amount of pictures.
Timed Capture	Device captures one picture after the specified time interval. You can set the time interval as needed.

3. Select **Picture Type** to set the picture type.

Offline Picture	Select this type when analyzing the picture with the client software. You can add remarks on the picture.
Thermal Graphic	Select this type for custom software development. Remark on the picture is not allowed.

4. Optional: You can enable flashlight to get clear pictures in dark environment.
5. Optional: Set the optical resolution as needed.
6. Press ⊐ to exit.
7. In the live view interface, pull the trigger to capture snapshot.

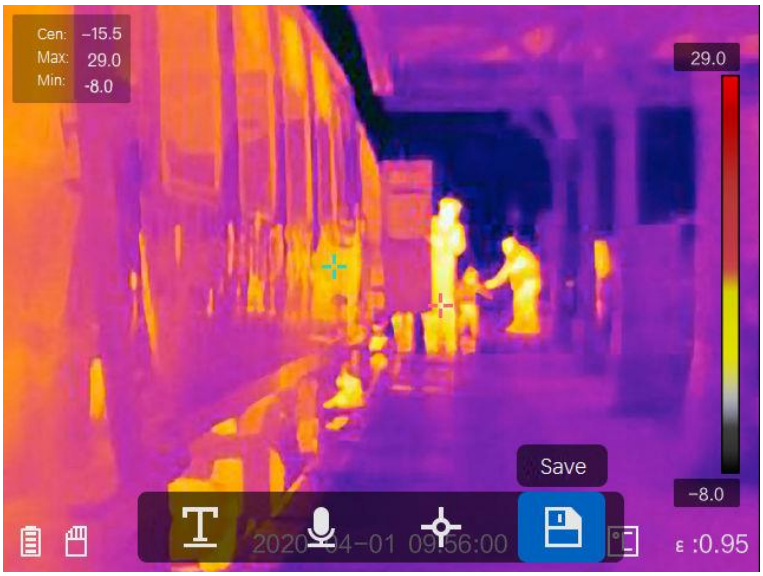

Figure 5-1 Capture Picture

8. The live view freezes and device displays the capture editing interface.
   1) Tap T to add text remarks. Tap the screen to show the keypad interface, enter the comment and confirm.
   2) Tap 🎙 to add voice remarks. Hold OK to start recording and release the button to stop recording.
   3) Tap ✧ to add thermography rules. Refer to ***Set Thermography Rule*** for details.
   4) Tap 💾 or pull the trigger to save the snapshot.

   Note

   You can also press ⮌ to quit the saving.

9. Refer to ***Export Files*** to export the snapshots.

5.2 Record Video

Steps

1. In the live view interface, pull the trigger to start recording. The recording icon and recording time display in the interface.

Figure 5-2 Record Video

2. When you finish, pull the trigger again to stop recording. The recording video will be saved automatically and exit.

Note

You can also press OK or ⮌ to stop recording.

3. Refer to ***Export Files*** to export the snapshots.

5.3 View Recorded Files

Steps

1. Select ▭ from the main menu.
2. Press △, ▽, ◁, and ▷ to select the video or snapshot.
3. Press OK to view the file.

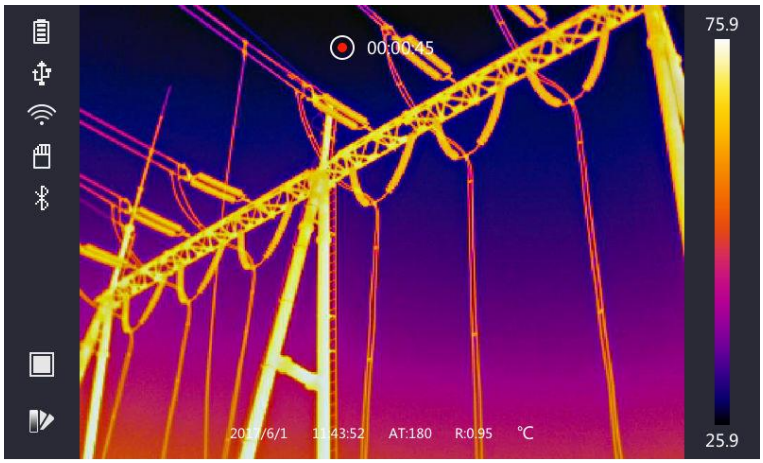

Figure 5-3 View Files

Note

- When you are viewing the videos or capture snapshots, you can switch the file by tapping or .
- When you are viewing the snapshots, You can tap to play the sound. Refer to ***Connect Bluetooth*** to set the bluetooth.
- For more information contained in capture snapshots or videos, you can install the HIKMICRO Analyzer to analyze them. You can get the thermography client software from the disk packed in box.

5.4 Export Files

Connect the device to your PC with supplied cable, you can export the recorded videos and captured snapshots.

Steps

1. Open the cover of cable interface.
2. Connect the device to your PC with cable and open the detected disk.
3. Select and copy the videos or snapshots to PC to view the files.
4. Disconnect the device from your PC.

Note

For the first time connection, the driver will be installed automatically.

What to do next

You can import the captured snapshots to HIKMICRO Analyzer for further data analysis. See the *User Manual of HIKMICRO Analyzer* (embedded in the client software, **Help** → **User Manual**) for the operation guide.

Chapter 6 Connect Bluetooth

You can use the bluetooth headset to play the audio recorded together with the videos and the images.

Steps

1. Select from the main menu.
2. Go to **Local Settings** → **Device Settings** → **Bluetooth**.
3. Tap on to enable the bluetooth.

Note

You can also press or **OK** to quit pairing.

The device will search the nearby enabled bluetooth headsets and pair them automatically.

Chapter 7 Light Settings

7.1 Set LED Light

Go to **Local Settings** → **Device Settings** → **Light Supplement**. Tap to enable LED light, or press △ in the live view to enable/disable the LED light.

7.2 Set Laser

In the live view interface, hold to enable/disable the laser light.

Caution

The laser radiation emitted from the device can cause eye injuries, burning of skin or inflammable substances. Before enabling the Light Supplement function, make sure no human or inflammable substances are in front of the laser lens.

Chapter 8 Thermal View APP Connection

The device supports both Wi-Fi connection and WLAN hot spot. Connect the device to HIKMICRO Viewer, and you can control the device via mobile client.

8.1 Connect via Wi-Fi

Before You Start

Download and install HIKMICRO Viewer on your phone.

Steps

1. Go to **Local Settings** → **Device Settings** → **Wi-Fi**.
2. Tap to enable Wi-Fi, and the searched Wi-Fi will be listed as below.

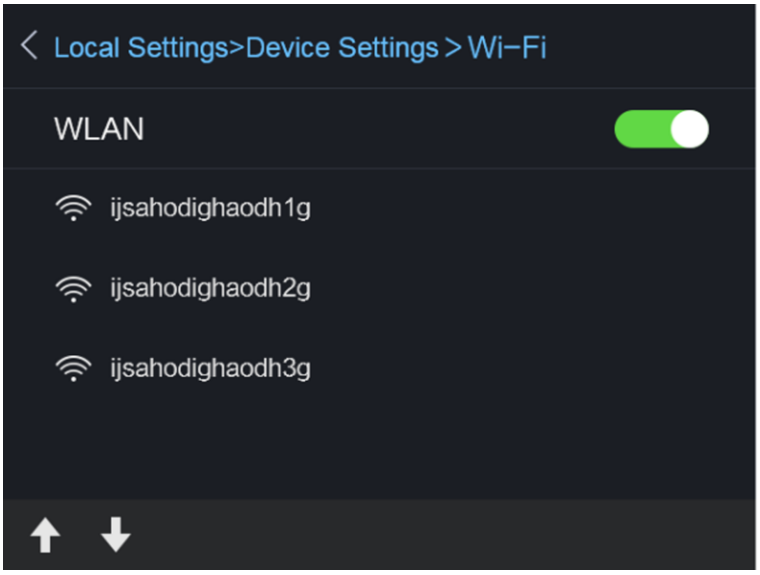

Figure 8-1 Wi-Fi List

3. Select Wi-Fi and enter password.

Note

DO NOT tap **enter** or **space**, or the password may be incorrect.

4. Tap **Close** to hide the keypad.
5. Tap **OK**.

Note

It takes about 1 minute at most to connect the device to the selected Wi-Fi. Leaving the Wi-Fi setting page does not interrupt the connection. A Wi-Fi icon shows on the main interface when the connection is completed.

6. Launch the app and follow the startup wizard to create, and register an account.
7. Add the device to online devices.

Result

You can view the live view, capture snapshots, and record videos via the client.

8.2 Connect via Hot Spot

Before You Start

Download and install HIKMICRO Viewer on your phone.

Steps

1. Go to **Local Settings** → **Device Settings** → **Wi-Fi Hotspot Settings**.
2. Tap to enable WLAN hot spot function.
3. Tap **Set Hot Spot** to set the WLAN hot spot. The hot spot name and password display automatically.

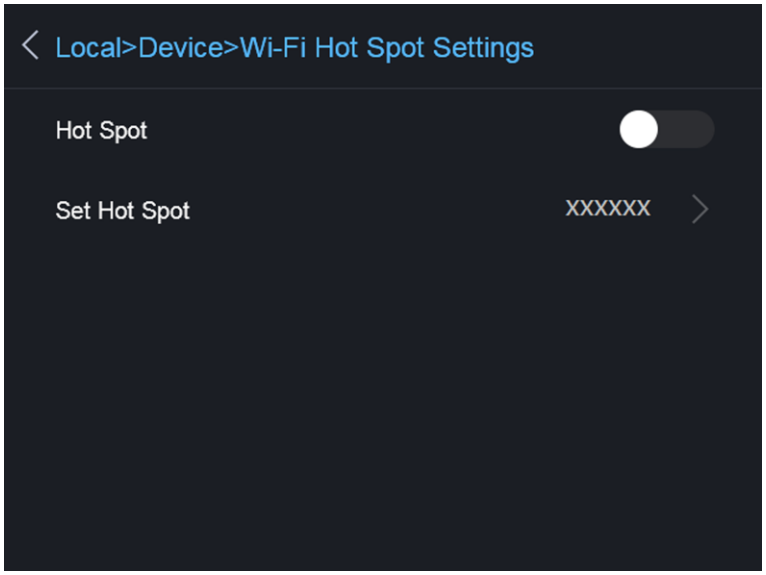

Figure 8-2 Set Hot Spot

4. Edit the hot spot name and password.

Note

DO NOT tap **enter** or **space**, and at least 8 characters, or the password may be incorrect.

5. Tap **Close** to hide the keypad.
6. Connect your phone to the WLAN Hot Spot of the device.
7. Launch the app and follow the startup wizard to create, and register an account.
8. Select Wi-Fi configuration in the software, enter the serial number of device to add the device. Refer to the manual of client software for details.

Result

You can view the live view, capture snapshots, and record videos via the client.

Chapter 9 Maintenance

9.1 View Device Information

Go to **Local Settings** → **Device Information** to view the device information.

9.2 Set Date and Time

Steps

1. Go to **Local Settings** → **Device Settings** → **Time and Date**.
2. Set the date and time.
3. Press ⊐ to save and exit.

Note

Go to **Local Settings** → **Image Settings** → **Display Settings** to enable or disable time and date display.

9.3 Upgrade Device

Steps

1. Connect the device to your PC with cable and open the detected disk.
2. Copy the upgrade file and paste it to the root directory of the device.
3. Disconnect the device from your PC.
4. Reboot the device and then it will upgrade automatically. The upgrading process will be displayed in the main interface.

Note

After upgrading, the device reboots automatically. You can view the current version in **Local Settings** → **Device Information**.

9.4 Restore Device

Go to **Local Settings** → **Device Settings** → **Device Initialization** to initialize the device and restore default settings.

Chapter 10 Appendix

10.1 Common Material Emissivity Reference

Material	Emissivity
Human Skin	0.98
Printed Circuit Board	0.91
Concrete	0.95
Ceramic	0.92
Rubber	0.95
Paint	0.93
Wood	0.85
Pitch	0.96
Brick	0.95
Sand	0.90
Soil	0.92
Cloth	0.98
Hard Paperboard	0.90
White Paper	0.90
Water	0.96

10.2 Device Command

Scan the following QR code to get device common serial port commands.
Note that the command list contains the commonly used serial port commands for HikMicro thermal cameras.

10.3 Device Communication Matrix

Scan the following QR code to get device communication matrix.
Note that the matrix contains all communication ports of HikMicro thermal cameras.

10.4 FAQ

Scan the following QR code to get device common FAQ.

HIKMICRO

See the World in a New Way

Facebook: HIKMICRO Thermography LinkedIn: HIKMICRO
Instagram: hikmicro_thermography YouTube: HIKMICRO
E-mail: info@hikmicrotech.com Website: https://www.hikmicrotech.com/

UD25350B