Handheld Thermography Camera

User Manual

Legal Information

© 2020 Hangzhou Microimage Software Co., Ltd. All rights reserved.

About this Manual

The Manual includes instructions for using and managing the Product. Pictures, charts, images and all other information hereinafter are for description and explanation only. The information contained in the Manual is subject to change, without notice, due to firmware updates or other reasons. Please find the latest version of this Manual at the HIKMICRO website (***http://www.hikmicrotech.com/***).
Please use this Manual with the guidance and assistance of professionals trained in supporting the Product.

Trademarks

HIKMICRO and other HIKMICRO's trademarks and logos are the properties of HIKMICRO in various jurisdictions.
Other trademarks and logos mentioned are the properties of their respective owners.

Disclaimer

TO THE MAXIMUM EXTENT PERMITTED BY APPLICABLE LAW, THIS MANUAL AND THE PRODUCT DESCRIBED, WITH ITS HARDWARE, SOFTWARE AND FIRMWARE, ARE PROVIDED “AS IS” AND “WITH ALL FAULTS AND ERRORS”. HIKMICRO MAKES NO WARRANTIES, EXPRESS OR IMPLIED, INCLUDING WITHOUT LIMITATION, MERCHANTABILITY, SATISFACTORY QUALITY, OR FITNESS FOR A PARTICULAR PURPOSE. THE USE OF THE PRODUCT BY YOU IS AT YOUR OWN RISK. IN NO EVENT WILL HIKMICRO BE LIABLE TO YOU FOR ANY SPECIAL, CONSEQUENTIAL, INCIDENTAL, OR INDIRECT DAMAGES, INCLUDING, AMONG OTHERS, DAMAGES FOR LOSS OF BUSINESS PROFITS, BUSINESS INTERRUPTION, OR LOSS OF DATA, CORRUPTION OF SYSTEMS, OR LOSS OF DOCUMENTATION, WHETHER BASED ON BREACH OF CONTRACT, TORT (INCLUDING NEGLIGENCE), PRODUCT LIABILITY, OR OTHERWISE, IN CONNECTION WITH THE USE OF THE PRODUCT, EVEN IF HIKMICRO HAS BEEN ADVISED OF THE POSSIBILITY OF SUCH DAMAGES OR LOSS.
YOU ACKNOWLEDGE THAT THE NATURE OF INTERNET PROVIDES FOR INHERENT SECURITY RISKS, AND HIKMICRO SHALL NOT TAKE ANY RESPONSIBILITIES FOR ABNORMAL OPERATION, PRIVACY LEAKAGE OR OTHER DAMAGES RESULTING FROM CYBER-ATTACK, HACKER ATTACK, VIRUS INSPECTION, OR OTHER INTERNET SECURITY RISKS; HOWEVER, HIKMICRO WILL PROVIDE TIMELY TECHNICAL SUPPORT IF REQUIRED.
YOU AGREE TO USE THIS PRODUCT IN COMPLIANCE WITH ALL APPLICABLE LAWS, AND YOU ARE SOLELY RESPONSIBLE FOR ENSURING THAT YOUR USE CONFORMS TO THE APPLICABLE LAW. ESPECIALLY, YOU ARE RESPONSIBLE, FOR USING THIS PRODUCT IN A MANNER THAT DOES NOT INFRINGE ON THE RIGHTS OF THIRD PARTIES, INCLUDING WITHOUT LIMITATION, RIGHTS OF PUBLICITY, INTELLECTUAL PROPERTY RIGHTS, OR DATA PROTECTION AND OTHER PRIVACY RIGHTS.

YOU SHALL NOT USE THIS PRODUCT FOR ANY PROHIBITED END-USES, INCLUDING THE DEVELOPMENT OR PRODUCTION OF WEAPONS OF MASS DESTRUCTION, THE DEVELOPMENT OR PRODUCTION OF CHEMICAL OR BIOLOGICAL WEAPONS, ANY ACTIVITIES IN THE CONTEXT RELATED TO ANY NUCLEAR EXPLOSIVE OR UNSAFE NUCLEAR FUEL-CYCLE, OR IN SUPPORT OF HUMAN RIGHTS ABUSES.

IN THE EVENT OF ANY CONFLICTS BETWEEN THIS MANUAL AND THE APPLICABLE LAW, THE LATER PREVAILS.

Regulatory Information

FCC Information

Please take attention that changes or modification not expressly approved by the party responsible for compliance could void the user's authority to operate the equipment.
FCC compliance: This equipment has been tested and found to comply with the limits for a Class B digital device, pursuant to part 15 of the FCC Rules. These limits are designed to provide reasonable protection against harmful interference in a residential installation. This equipment generates, uses and can radiate radio frequency energy and, if not installed and used in accordance with the instructions, may cause harmful interference to radio communications. However, there is no guarantee that interference will not occur in a particular installation. If this equipment does cause harmful interference to radio or television reception, which can be determined by turning the equipment off and on, the user is encouraged to try to correct the interference by one or more of the following measures:
—Reorient or relocate the receiving antenna.
—Increase the separation between the equipment and receiver.
—Connect the equipment into an outlet on a circuit different from that to which the receiver is connected.
—Consult the dealer or an experienced radio/TV techniciaan for help

FCC Conditions
This device complies with part 15 of the FCC Rules. Operation is subject to the following two conditions:

1. This device may not cause harmful interference.
2. This device must accept any interference received, including interference that may cause undesired operation.

EU Conformity Statement

This product and - if applicable - the supplied accessories too are marked with "CE" and comply therefore with the applicable harmonized European standards listed under the EMC Directive 2014/30/EU, RE Directive 2014/53/EU,the RoHS Directive 2011/65/EU

2012/19/EU (WEEE directive): Products marked with this symbol cannot be disposed of as unsorted municipal waste in the European Union. For proper recycling, return this product to your local supplier upon the purchase of equivalent new equipment,

or dispose of it at designated collection points. For more information see: www.recyclethis.info

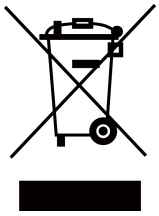

2006/66/EC (battery directive): This product contains a battery that cannot be disposed of as unsorted municipal waste in the European Union. See the product documentation for specific battery information. The battery is marked with this symbol, which may include lettering to indicate cadmium (Cd), lead (Pb), or mercury (Hg). For proper recycling, return the battery to your supplier or to a designated collection point. For more information see:www.recyclethis.info

Industry Canada ICES-003 Compliance

This device meets the CAN ICES-3 (B)/NMB-3(B) standards requirements.
This device complies with Industry Canada licence-exempt RSS standard(s). Operation is subject to the following two conditions:

1. this device may not cause interference, and
2. this device must accept any interference, including interference that may cause undesired operation of the device.

Le présent appareil est conforme aux CNR d'Industrie Canada applicables aux appareils radioexempts de licence. L'exploitation est autorisée aux deux conditions suivantes :

1. l'appareil ne doit pas produire de brouillage, et
2. l'utilisateur de l'appareil doit accepter tout brouillage radioélectrique subi, même si le brouillage est susceptible d'en compromettre le fonctionnement.

Under Industry Canada regulations, this radio transmitter may only operate using an antenna of a type and maximum (or lesser) gain approved for the transmitter by Industry Canada. To reduce potential radio interference to other users, the antenna type and its gain should be so chosen that the equivalent isotropically radiated power (e.i.r.p.) is not more than that necessary for successful communication.
Conformément à la réglementation d'Industrie Canada, le présent émetteur radio peut fonctionner avec une antenne d'un type et d'un gain maximal (ou inférieur) approuvé pour l'émetteur par Industrie Canada. Dans le but de réduire les risques de brouillage radioélectrique à l'intention des autres utilisateurs, il faut choisir le type d'antenne et son gain de sorte que la puissance isotrope rayonnée équivalente (p.i.r.e.) ne dépasse pas l'intensité nécessaire à l'établissement d'une communication satisfaisante.

Symbol Conventions

The symbols that may be found in this document are defined as follows.

Symbol	Description
Danger	Indicates a hazardous situation which, if not avoided, will or could result in death or serious injury.
Caution	Indicates a potentially hazardous situation which, if not avoided, could result in equipment damage, data loss, performance degradation, or unexpected results.
Note	Provides additional information to emphasize or supplement important points of the main text.

Safety Instruction

These instructions are intended to ensure that user can use the product correctly to avoid danger or property loss.

Laws and Regulations

- Use of the product must be in strict compliance with the local electrical safety regulations.

Transportation

- Keep the device in original or similar packaging while transporting it.
- Keep all wrappers after unpacking them for future use. In case of any failure occurred, you need to return the device to the factory with the original wrapper. Transportation without the original wrapper may result in damage on the device and the company shall not take any responsibilities.
- DO NOT drop the product or subject it to physical shock. Keep the device away from magnetic interference.

Power Supply

- Please purchase the charger by yourself. Input voltage should meet the Limited Power Source (5 VDC, 2A) according to the IEC61010-1 standard. Please refer to technical specifications for detailed information.
- Make sure the plug is properly connected to the power socket.
- DO NOT connect multiple devices to one power adapter, to avoid over-heating or fire hazards caused by overload.

Battery

- Improper use or replacement of the battery may result in explosion hazard. Replace with the same or equivalent type only. Dispose of used batteries in conformance with the instructions provided by the battery manufacturer.
- The built-in battery cannot be dismantled. Please contact the manufacture for repair if necessary.
- For long-term storage of the battery, make sure it is fully charged every half year to ensure the battery quality. Otherwise, damage may occur.

Maintenance

- If the product does not work properly, please contact your dealer or the nearest service center. We shall not assume any responsibility for problems caused by unauthorized repair or maintenance.
- A few device components (e.g., electrolytic capacitor) require regular replacement. The average lifespan varies, so periodic checking is recommended. Contact your dealer for details.

- Wipe the device gently with a clean cloth and a small quantity of ethanol, if necessary.
- If the equipment is used in a manner not specified by the manufacturer, the protection provided by the device may be impaired.

Using Environment

- Make sure the running environment meets the requirement of the device. The operating temperature shall be -10°C to 50°C (14°F to 122°F), and the operating humidity shall be 90% or less.
- DO NOT expose the device to high electromagnetic radiation or dusty environments.
- DO NOT aim the lens at the sun or any other bright light.

Emergency

- If smoke, odor, or noise arises from the device, immediately turn off the power, unplug the power cable, and contact the service center.

Laser Light Supplement Warning

The laser radiation emitted from the device can cause eye injuries, burning of skin or inflammable substances. Before enabling the Light Supplement function, make sure no human or inflammable substances are in front of the laser lens.

Manufacture Address

Room 313, Unit B, Building 2, 399 Danfeng Road, Xixing Subdistrict,Binjiang District, Hangzhou, Zhejiang 310052, China
Hangzhou Microimage Software Co., Ltd

Contents

Chapter 1 Overview 1
1.1 Device Description 1
1.2 Main Function 1
1.3 Appearance 2
Chapter 2 Preparation 5
2.1 Charge Device 5
2.1.1 Charge Device via Charging Base 5
2.1.2 Charge Device via Cable Interface 6
2.2 Mount Hand Strap 7
2.3 Mount Protective Cover 8
2.4 Mount Teleconverter 8
2.5 Power On/Off 11
2.5.1 Set Auto Power-off Duration 11
2.6 Operation Method 11
2.7 Menu Description 13
Chapter 3 Display Settings 15
3.1 Focus 15
3.1.1 Focus Lens 15
3.1.2 Laser Auxiliary Focus 15
3.1.3 Semi-auto Focus 16
3.1.4 Auto Focus 16
3.2 Set Screen Brightness 16
3.3 Set Display Mode 17
3.4 Set Palettes 17
3.5 Adjust Digital Zoom 18
3.6 Display OSD Info 18

Chapter 4 Temperature Measurement 19
4.1 Set Thermography Parameters 19
4.1.1 Set Unit 20
4.2 Set Temperature Range 20
4.3 Set Thermography Rule 20
4.3.1 Set Point Rule 21
4.3.2 Set Line Rule 21
4.3.3 Set Frame Rule 22
4.3.4 Delete Rules 22
4.4 Set Temperature Alarm 22
Chapter 5 Picture and Video 24
5.1 Capture Picture 24
5.2 Scan QR Code 25
5.3 Record Video 25
5.4 View Recorded Files 26
5.5 Export Files 26
Chapter 6 Distance Detection 28
Chapter 7 Connect Bluetooth 29
Chapter 8 Set LED Light 30
Chapter 9 Thermal View APP Connection 31
9.1 Connect via Wi-Fi 31
9.2 Connect via Hot Spot 32
Chapter 10 Maintenance 33
10.1 View Device Information 33
10.2 Set Date and Time 33
10.3 Upgrade Device 33
10.4 Restore Device 33
Chapter 11 Appendix 34

11.1 Common Material Emissivity Reference 34
11.2 Device Command 34
11.3 Device Communication Matrix 35
11.4 FAQ 35

Chapter 1 Overview

1.1 Device Description

The handheld thermography camera is a device with both optical images and thermal images. It can do thermography, distance measurement, video recording, snapshot capturing, alarm, and it can connect to Wi-Fi, hotspot and Bluetooth. The built-in high-sensitivity IR detector and high-performance sensor detects the variation of temperature and measure the real-time temperature. The built-in laser module detects the target distance.

The device is easy to use, and adopts ergonomic design. It is widely applied to substations, electricity prevention detection of companies, and reconnaissance survey of construction field.

1.2 Main Function

Thermography

Device detects the real-time temperature, and display it on the screen.

Distance Measurement

Device can detect the target distance with the laser light.

Fusion

Device can display fusion of thermal view and optical view.

QR Code

Device can scan the QR code and capture it.

Palette and Alarm

Device supports multiple palettes, and you can set the palette mode according to the alarm function.

Client Software Connection

You can connect the device with client software via Wi-Fi or hot spot. Then you can view live view, capture, and recording, etc. on your phone.

Bluetooth

Device can be connected to headset via Bluetooth, and you can hear the voice in the recording or capture.

1.3 Appearance

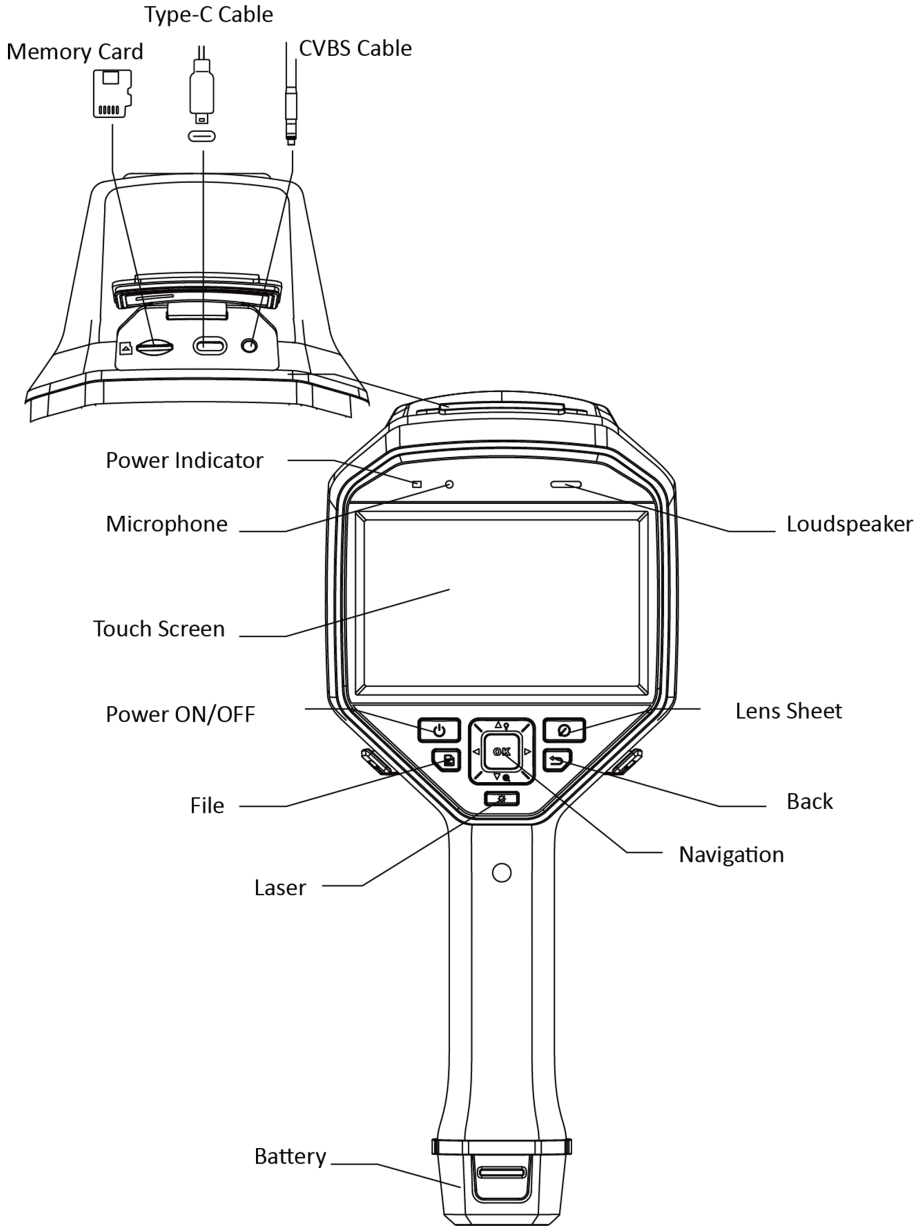

Figure 1-1 Appearance

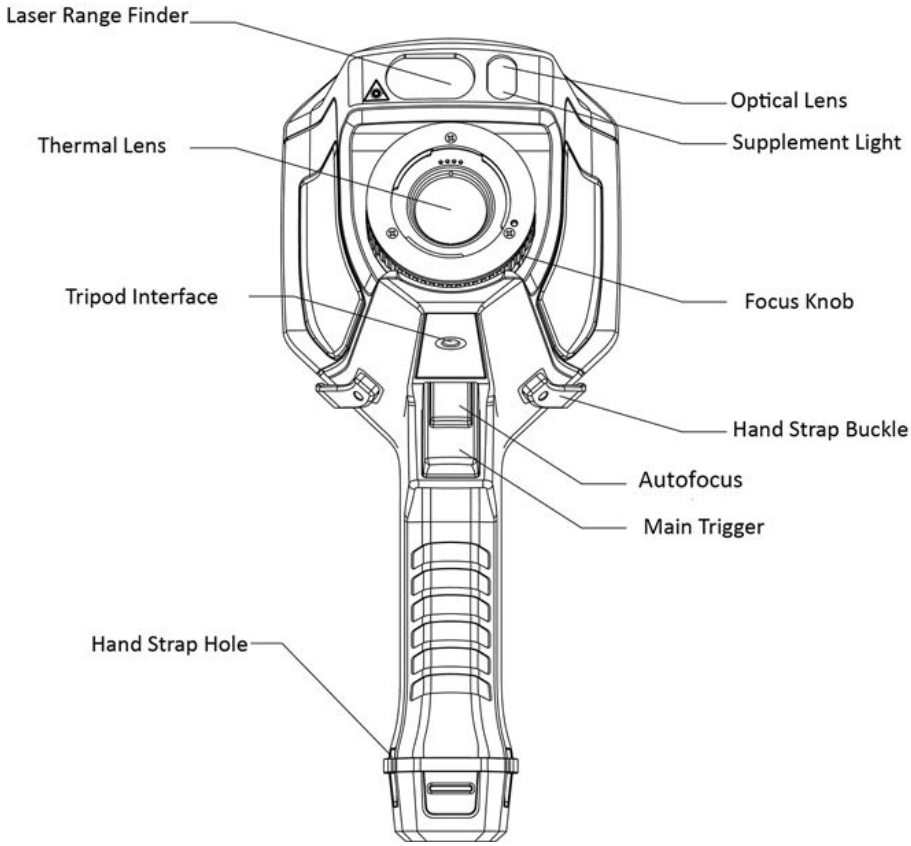

Table 1-1 Interface Description

Component	Function
Laser Button	Hold the button to turn on laser, and release the button to turn off laser.
Navigation Button	Menu Mode: • Press △ , ▽ , ▷ and ◁ to select parameters. • Press OK to confirm.
	Non-Menu Mode: • Press △ to turn on/off the LED light supplement. • Press ▽ to start digital zoom.
Lens Sheet Button	Cover the lens to perform the correction.
Back Button	Exit the menu or return to previous menu.
Focus Knob	Adjust lens focal length. Refer to ***Focus Lens*** .
Trigger	Pull the trigger to capture or scan the QR code. Hold the trigger to record videos.
Autofocus	Pull the trigger to turn on/off autofocus function.

Caution

The laser radiation emitted from the device can cause eye injuries, burning of skin or inflammable substances. Before enabling the light supplement function, make sure no human or inflammable substances are in front of the laser lens.

Chapter 2 Preparation

2.1 Charge Device

2.1.1 Charge Device via Charging Base

Steps

Note

Please charge the device with the cable and power adapter supplied by the manufacturer (or according to the input voltage from the specifications).

1. Hold the device, and press both battery lock catches of the device.

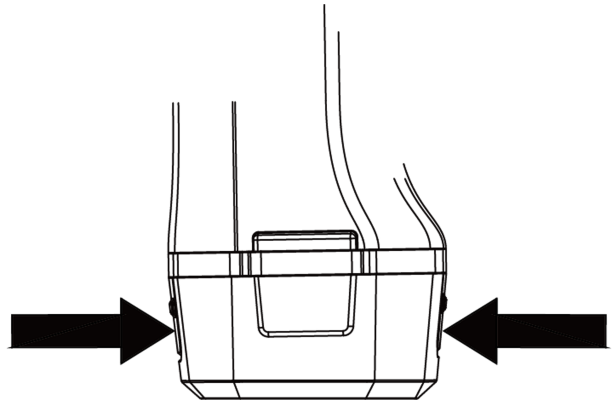

Figure 2-1 Remove Battery Base

2. Hold the lock catches, and draw the battery base to take out the battery.
3. Insert the battery into the charging base. You can see the charging status via the pilot lamp on the charging base.

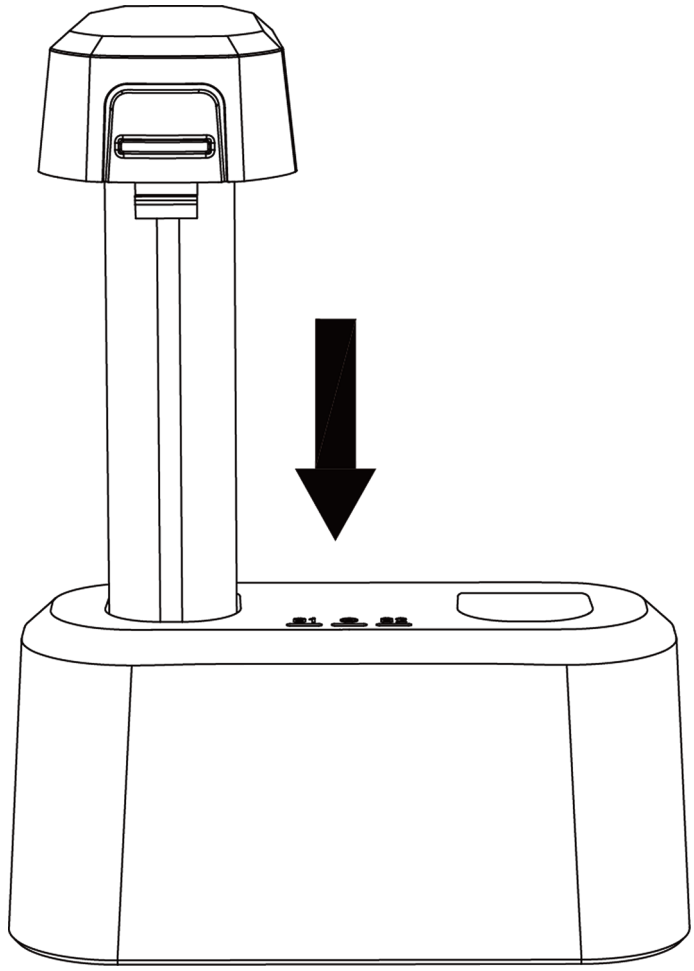

Figure 2-2 Charge Battery

4. When the battery is fully charged, draw the battery from the charging base.
5. Insert battery into the device.

2.1.2 Charge Device via Cable Interface

Before You Start

Please make sure the battery is installed before charging.

Steps

1. Open the top cover of the device.
2. Connect the interface and the power adaptor with Type-C or USB cable.

2.2 Mount Hand Strap

The upper part of the hand strap is attached to the camera by a buckle. There are two buckles on both sides of the camera. The lower part of the hand strap is threaded through the hole at the base of the camera.

Steps

1. Insert the upper part of the hand strap into the buckle.

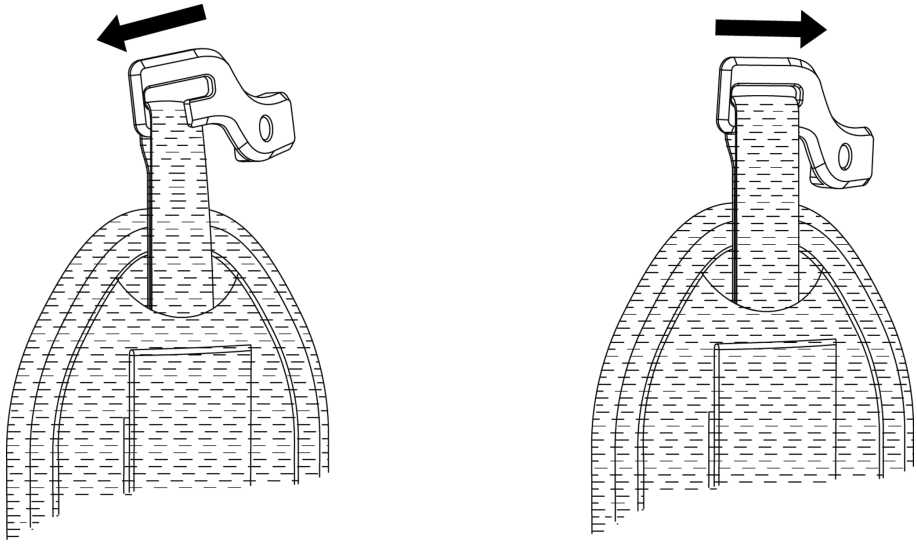

Figure 2-3 Insert Upper Part of Hand Strap

2. Fit the buckle on the device and tighten the screw with the supplied wrench.
3. Thread the lower part of the hand strap through the hole at the base of the device. Secure the hand strap with the hook-and-loop fastener.

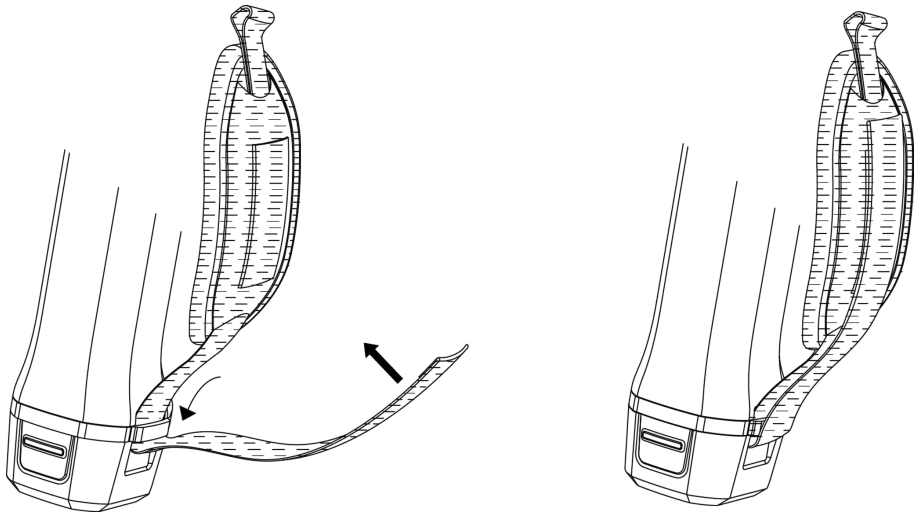

Figure 2-4 Secure Lower Part of Hand Strap

2.3 Mount Protective Cover

Attach the protective cover when the device is not in use.

Steps

1. Align the threaded hole of the device with the mounting hole of the lens cover.
2. Insert the screw, and rotate it clockwise to fix the lens cover.

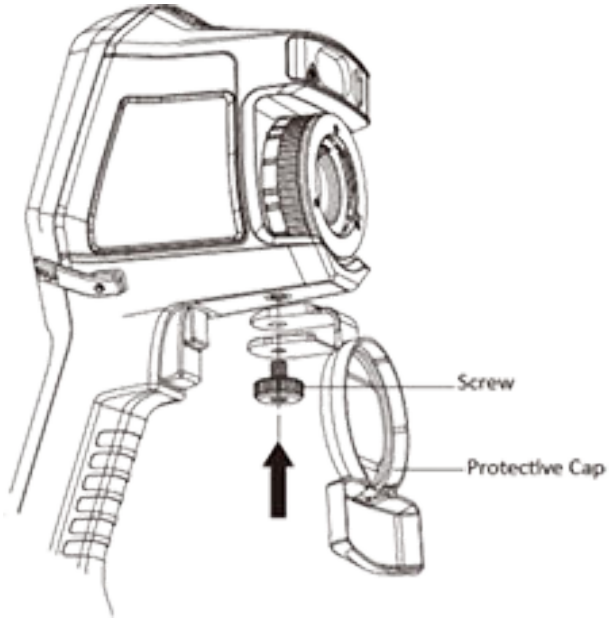

Figure 2-5 Fix Protective Cover

2.4 Mount Teleconverter

Before You Start

Purchase the teleconverter separately by yourself.

Steps

1. Turn the decorative ring 38 degree anticlockwise.

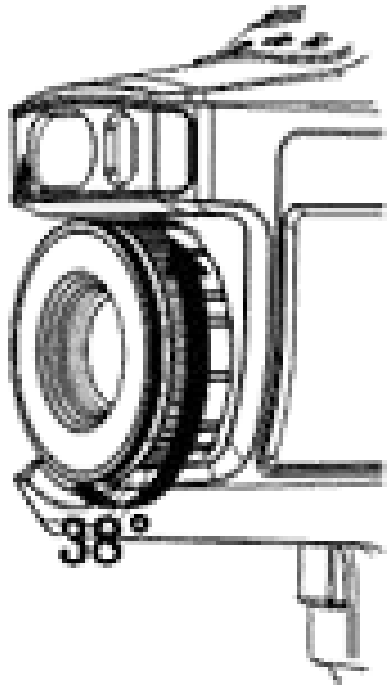

Figure 2-6 Rotate the Decorative Ring

2. Remove the decorative ring.

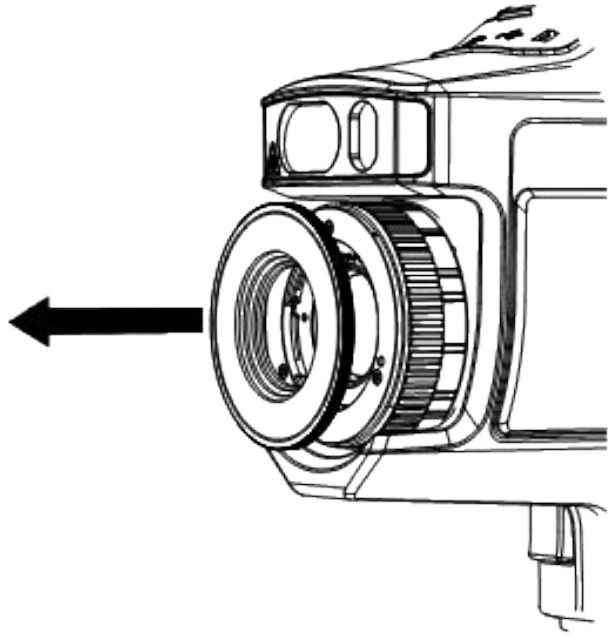

Figure 2-7 Remove the Decorative Ring

3. Align the two red spots on the teleconverter and the device, then rotate the teleconverter clockwise to finish mounting.

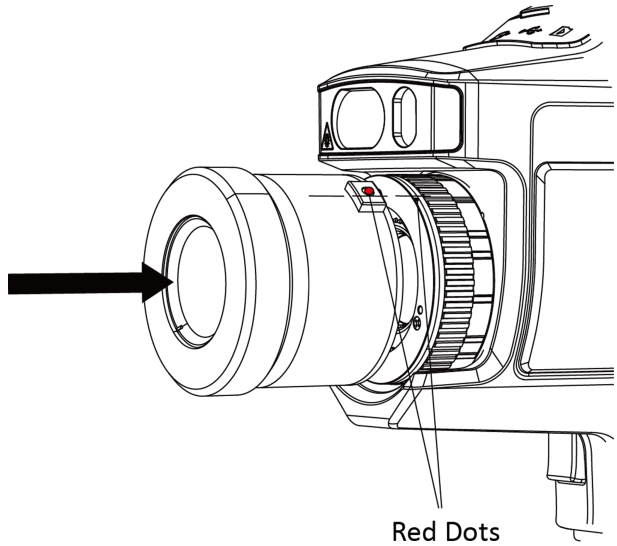

Figure 2-8 Align the Red Spots

4. Rotate the teleconverter clockwise to fix it.

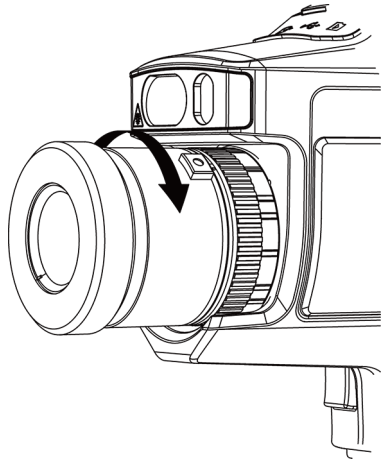

Figure 2-9 Mount the Teleconverter

5. Optional: Rotate the teleconverter anticlockwise to dismount it.

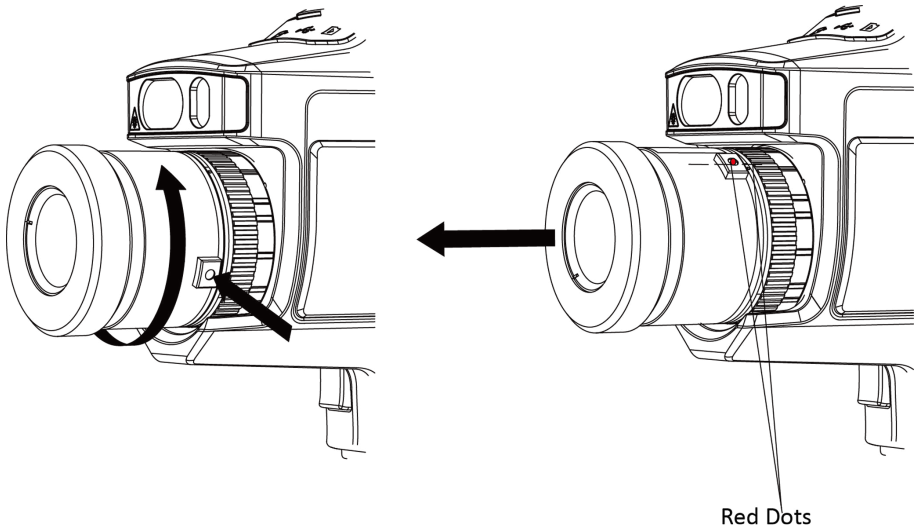

Figure 2-10 Dismount the Teleconverter

2.5 Power On/Off

Power On

Remove the lens cover, and hold ⏻ for over three seconds to turn on the device. You can observe the target when the interface of the device is stable.

Note

It may take at least 30 s until the device is ready for using when you power on it.

Power Off

When the device is turned on, hold ⏻ for three seconds to power off the device.

2.5.1 Set Auto Power-off Duration

Go to **Local Settings → Device Settings → Auto Power-off Duration Settings** to set the automatic shutdown time for device as required.

2.6 Operation Method

The device supports both touch-screen control and button control.

Touch-screen control

Tap on the screen to set parameters and configurations.

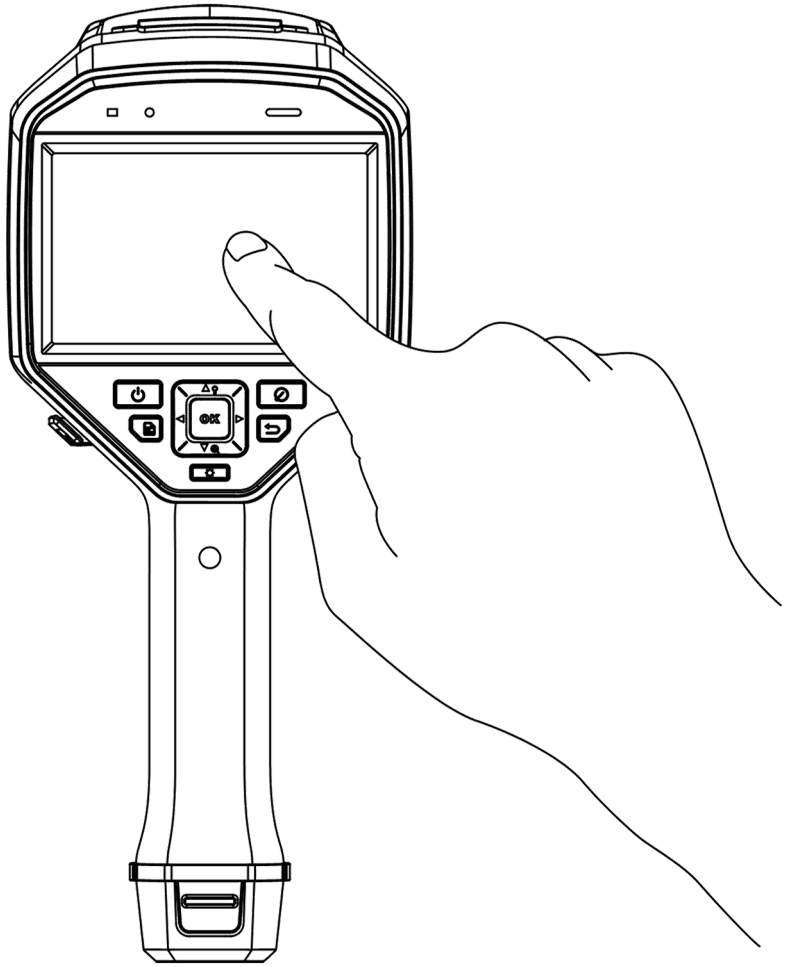

Figure 2-11 Touch-screen Control

Button control

Press the navigation buttons to set parameters and configurations.

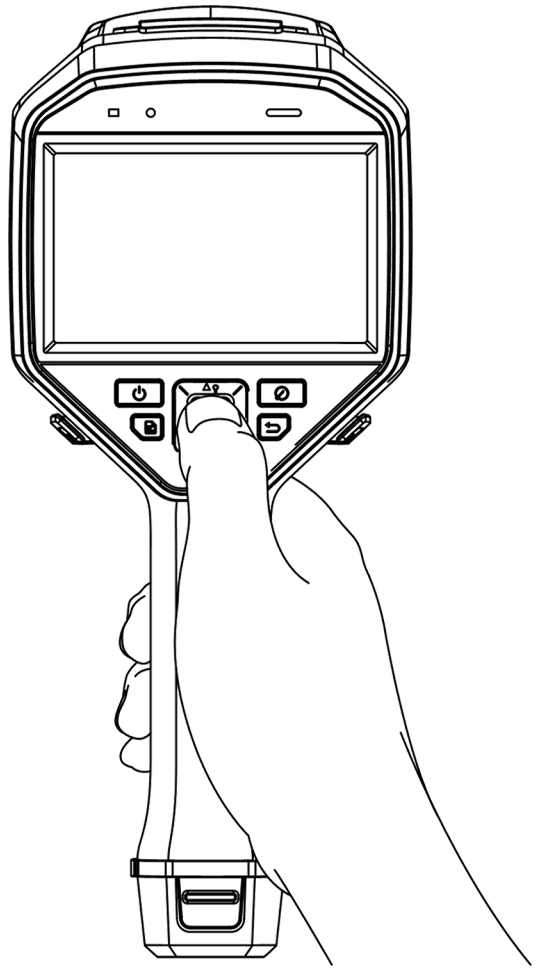

Figure 2-12 Button Control

- Press △ , ▽ , ◁ , and ▷ to move the cursor up/down/left/right.
- Press OK to confirm.

2.7 Menu Description

In the observation interface, tap the screen or press OK to show the menu bar.

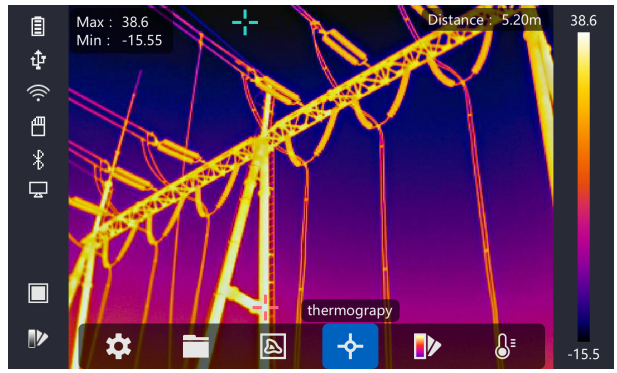

Figure 2-13 Menu

Chapter 3 Display Settings

3.1 Focus

Adjust the lens focal length properly before you set any other configurations, or it may affect the image display and temperature accuracy.

3.1.1 Focus Lens

Steps

1. Power on the device.
2. Aim the device lens to the appropriate scene.
3. Adjust the focus knob clockwise or anticlockwise, see figure below.

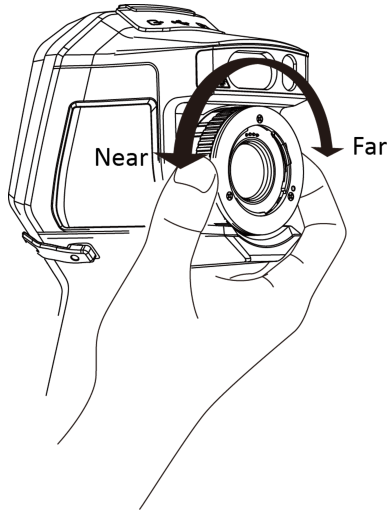

Figure 3-1 Focus Lens

Note

DO NOT touch the lens to avoid affecting the display effect.

3.1.2 Laser Auxiliary Focus

Point the laser to the target and the device focuses automatically.

Before You Start

- Disable auto focus mode first.
- It is recommended to use this function in non-glare environment, such as indoor environment.
- It is recommended that the target has good light reflection, such as white paper, cable.

Steps

1. Press OK in live view.
2. Select ⚙, and go to **Capture Settings → Laser Auxiliary Focus** .
3. In the live view interface, aim the cursor at the target and hold the auto focus trigger. Release the trigger to finish focus.

Note

DO NOT adjust the focus ring in this mode, or it will interrupt the focus process.

3.1.3 Semi-auto Focus

The device focuses automatically by comparing the brightness, contrast, etc. in current scene.

Note

- Disable auto focus mode and laser auxiliary focus mode first.
- DO NOT adjust the focus ring in this mode, or it will interrupt the focus process.

In the live view interface, aim the cursor at the target and hold the auto focus trigger. Release the trigger to finish focusing.

3.1.4 Auto Focus

In auto focus mode, the device focuses on the target automatically to make the scene clear. Use this mode when the device is stationary.

Caution

Disable auto focus mode when the device is moving, or it may affect the device function.

Press OK in live view, and select ⚙ . Go to **Capture Settings → Auto Focus** , and enable auto focus mode. Then aim the device at the target, and the device focuses automatically.

Note

Focus ring adjustment does not take effect in auto focus mode.

3.2 Set Screen Brightness

Go to **Local Settings → Device Settings → Display Brightness** to set the screen brightness. It can be set as **Low**, **Medium**, or **High**.

3.3 Set Display Mode

You can set the thermal/optical view of the device. **Thermal**, **Fusion**, **PIP**, and **Optical** are selectable.

Steps

1. Select from the main menu.
2. Tap on the icons to select a view mode.

   In thermal mode, the device displays the thermal view.

   In fusion mode, the device displays the combined view of thermal channel and optical channel.

   In PiP (Picture in Picture) mode, the device displays thermal view inside the optical view.

   Note

   You can press ▷ and ◁ to set the PiP proportion. Or go to **Local Settings → Image Settings → PIP Proportion** to set the value.

   In optical mode, the device displays the optical view.
3. Press to exit.

3.4 Set Palettes

The palettes allow you to select the desired colors.

Steps

1. Select from the main menu.
2. Tap on the icons to select a palette type.

   White Hot

   The hot part is light-colored in view.

   Black Hot

   The hot part is black-colored in view.

   Rainbow

   The target displays multiple colors, it is suitable for scene without obvious temperature difference.

   Ironbow

The target is colored as heated iron.

Red Hot

The hot part is red-colored in view.

Fusion

The hot part is yellow-colored and the cold part is purple-colored in view.

Rain

The hot part in the image are colored, and the else is blue.

3. Press to exit the setting interface.

Note

You can also press on the live view interface to change the palettes.

3.5 Adjust Digital Zoom

In the live view interface, press ▽ to adjust the digital zoom to 1×, 2×, 4×, or 8×. Then you can view the target or scene in larger size.

3.6 Display OSD Info

Go to **Local Settings → Image Settings → Display Settings** to enable the corresponding icons. Then you can view the device status, time, and target emissivity in live view interface.

Chapter 4 Temperature Measurement

The thermography (temperature measurement) function provides the real-time temperature of the scene and display it on the left of your screen. The thermography function is turned on by default.

4.1 Set Thermography Parameters

You can set thermography parameters to improve the accuracy of temperature measurement.

Steps

1. Go to **Local Settings → Thermography Settings** .
2. Set the **Thermography Range**, and **Emissivity**, etc.

   Thermography Range

   Select the temperature measurement range. The device can detect the temperature and switch thermography range automatically in **Auto Switch** mode.

   Emissivity

   Refer to ***Common Material Emissivity Reference*** to set the emissivity of your target.

   Reflection Temperature

   If any object (not the target) of high temperature is in the scene, and the target emissivity is low, set the reflection temperature as the high temperature to correct the thermography effect.

   Distance

   The distance between the target and the device. You can customize the target distance or select the target distance as **Near**, **Middle**, or **Far**.

   Environment Temperature

   The average temperature of the environment.

   Humidity

   Set the relative humidity of current environment.

   Optical Transmissivity

   Set the optical transmissivity of external optical material (e.g.: germanium window) to improve the temperature measuring accuracy.

   External Optics Temperature

   Set temperature of the external optical material (e.g.: germanium window).
3. Return to previous menu to save the settings.

Note

You can go to **Local Settings → Device Settings → Device Initialization → Measurement Tool Initialization** to initialize the temperature measurement parameters.

4.1.1 Set Unit

Go to **Local Settings → Device Settings → Unit** to set the temperature unit and distance unit.

Note

You can go to **Local Settings → Image Settings → Display Settings** to enable/disable the temperature display.

4.2 Set Temperature Range

Set a temperature section and the palette only works for targets within the temperature section. You can adjust the temperature range.

Steps

1. Select from the main menu.
2. Select auto adjustment or manual adjustment .

Auto Adjustment	Select , and press OK . The device adjusts temperature range parameters automatically.
Manual Adjustment	Select , and press OK . • Press ◁ or ▷ to select the max. temperature, min. temperature, or both. You can also tap on the screen to select the max. temperature or min. temperature. • Press △ or ▽ adjust the temperature value. You can also tap on the arrows on the right side of the screen to adjust the temperature value.

3. Press to exit.

4.3 Set Thermography Rule

You can set thermography parameters to improve the accuracy of temperature measurement.

Steps

1. Select from the main menu.
2. Set the point, line, or frame rules. See figure below.

4.3.1 Set Point Rule

You can set four types of point thermography rules.

Table 4-1 Icon Description

Icon	Description
	Center Point Thermography
	High-temperature Point Thermography
	Low-temperature Point Thermography
	Custom Point Thermography

The setting method of center point, high-temperature, and low-temperature point thermography are all the same. Here is the example of setting high-temperature point thermography.

Example
Tap on the interface, the device locates the point of the highest temperature, and displays Max: XX.

Custom Point Thermography

The device can detect the temperature of a custom point.

Steps
1. Select .
2. Press OK .
3. Move the point with the navigation buttons or tap on the touch-screen to select a point.
4. Press OK .

   The temperature of custom point (e.g. P1) displays P1: XX.
5. Repeat step 1 to 3 to set other custom points.

Note
At most ten custom points supported.

4.3.2 Set Line Rule

Steps
1. Select .
2. Press OK to generate a default line.
3. Press △ , ▽ , ◁ , and ▷ to move the line up/down/left/right.
4. Drag points of the line on the touch-screen to extend or shorten the line.

5. Press OK .

Note

Only one line is supported.

The max. temperature, low temperature, and average temperature of line (e.g. L1) displays L1 Max: XX Min: XX Avg: XX. The real-time temperature trend chart will display.

4.3.3 Set Frame Rule

Steps

1. Select ▣ .
2. Press OK to generate a default frame.
3. Press △ , ▽ , ◁ , and ▷ to move the frame up/down/left/right.
4. Press ⊘ to enlarge the frame, and press ✱ to contract the frame. Or you can drag the corner of the frame on touch-screen to enlarge or contract the frame.
5. Press OK .

   The max. temperature, low temperature, and average temperature of frame (e.g. S1) displays S1 Max: XX Min: XX Avg: XX.
6. Repeat step 1 to 5 to set other frames.

Note

At most three frames are supported.

4.3.4 Delete Rules

Tap ✂ and press OK to clear all temperature rules. Or tap 🗑 and choose the single rule you want to delete.

4.4 Set Temperature Alarm

Set the alarm rules and the device will alarm when the temperature triggers the rule.

Before You Start

Set the palette.

Steps

1. Select **Palettes** from the main menu.
2. Tap the icons to select an alarm rule type.

Table 4-2 Icon Description

Icon	Alarm Mode	Description
	Above Alarm	Set the alarm temperature, and the device alarms when target temperature is higher than rule temperature.
	Below Alarm	Set the alarm temperature, and the device alarms when target temperature is lower than rule temperature.
	Interval Alarm	Set the alarm temperature section (e.g., 90 °C to 150 °C), when target temperature is within the section (e.g., 100 °C), the device alarms.
	Insulation Alarm	Set the alarm temperature section (e.g., 90 °C to 120 °C), when target temperature is without the section (e.g., 70 °C or 125 °C), the device alarms.

3. **Optional:** Press △ and ▽ to select between upper limit and lower limit.
4. Press ◁ and ▷ to adjust the rule temperature.
5. Press ⊃ to exit.

Note

Go to **Local Settings → Thermography Settings → Alarm Settings → Audible Warning** to enable audible warning. The device will sound when alarm is triggered.

Chapter 5 Picture and Video

Insert memory card into the device, then you can record videos, capture snapshots, and mark and save important data.

Note

- Device does not support capturing or recording when the menu is shown.
- When the device is connected to your PC, it does not support capturing or recording.
- Go to **Local Settings → Device Settings → Filename Header** , you can set the filename header for capturing or recording to distinguish the files recorded in a specify scene.
- Go to **Local Settings → Device Settings → Device Initialization** to initialize the memory card is needed.

5.1 Capture Picture

Before You Start

- Disable QR Code function first.
- Go to **Local Settings → Capture Settings → Flashlight** to enable flashlight in dark environment.

Steps

1. Go to **Local Settings → Capture Settings** .
2. Select **Capture Mode** to set the capture mode.

Single Capture	Capture one picture for one time.
Continuous Capture	Capture multiple pictures for one time. You can set the amount of pictures.
Timed Capture	Device captures one picture after the specified time interval. You can set the time interval as needed.

3. Select **Picture Type** to set the picture type.

Offline Picture	Select this type when analyzing the picture with the client software. You can add remarks on the picture.
Thermal Graphic	Select this type for custom software development. Remark on the picture is not allowed.

4. **Optional:** Set the optical resolution as needed.
5. Press to exit.
6. In the live view interface, pull the trigger to capture snapshot.
7. The live view freezes and device displays the capture editing interface.
   1) Tap to add text remarks. Tap the screen to show the keypad interface, enter the comment and confirm.

2) Tap to add voice remarks. Hold OK to start recording and release the button to stop recording.
3) Tap to add thermography rules. Refer to ***Set Thermography Rule*** for details.
4) Tap or pull the trigger to save the snapshot.

Note

You can also press to quit the saving.

8. Refer to ***Export Files*** to export the snapshots.

5.2 Scan QR Code

Device can scan and capture the QR code.

Steps

1. Press OK in live view, and select ,.
2. Go to **Capture Settings**, and enable **QR Code**.
3. Press to save and exit.
4. Aim the optical lems at the QR code, and press the main trigger. Then a rectangle shows on the screen and the device scans the QR code automatically.
5. After scanning the QR code successfully, press the main trigger again to capture and save the QR code.

Note

Only supports scanning the QR code with up to 100 characters of text content.

5.3 Record Video

Before You Start

Go to **Local Settings → Capture Settings → Flashlight** to enable flashlight in dark environment.

Steps

1. In the live view interface, hold the trigger to start recording. The recording icon and count down number display in the interface.

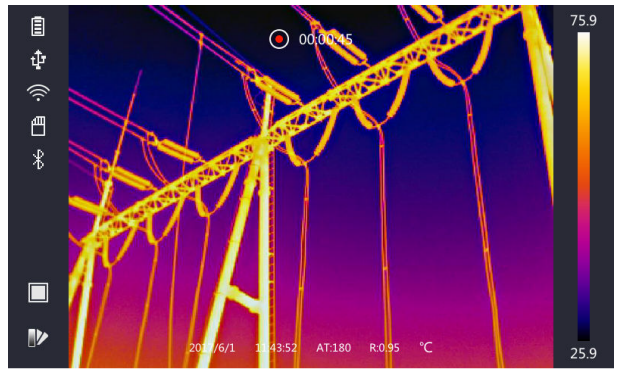

Figure 5-1 Record Video

2. When you finish, pull the trigger again to stop recording. The recording video will be saved automatically and exit.

Note

You can also press OK or ⮌ to stop recording.

3. Refer to ***Export Files*** to export the snapshots.

5.4 View Recorded Files

Steps

1. Select from the main menu.
2. Press △ , ▽ , ◁ , and ▷ to select the video or snapshot.
3. Press OK to view the file.

Note

- When you are viewing the videos or capture snapshots, you can switch the file by tapping or .
- When you are viewing the snapshots, You can tap to play the sound. Refer to ***Connect Bluetooth*** to set the bluetooth.
- For more information contained in capture snapshots or videos, you can install the thermography client to analyze them. You can get the thermography client software from the disk packed in box.

5.5 Export Files

Connect the device to your PC with supplied cable, you can export the recorded videos and captured snapshots.

Steps

1. Open the cover of cable interface.

2. Connect the device to your PC with cable and open the detected disk.
3. Select and copy the videos or snapshots to PC to view the files.
4. Disconnect the device from your PC.

Note

For the first time connection, the driver will be installed automatically.

Chapter 6 Distance Detection

The laser range finder consists of a laser transmitter and a laser receiver. The device detects the distance to a target by measuring the time it takes for a laser pulse to reach the target and return to the laser receiver. This time is converted to a distance, which is displayed on the screen.

Before You Start

- It is recommended to use this function in non-glare environment, such as indoor environment.
- It is recommended that the target has good light reflection, such as white paper, cable.

Steps

1. Press OK in live view.
2. Select ⚙, and go to **Image Settings → Display Settings** .
3. Enable **Distance Value**.
4. Press ↩ to save and exit.
5. In the live view interface, aim the cursor at the target and hold the laser button. Release the lase button to finish distance measurement.

   The distance displays on the screen when distance measurement is finished.

Chapter 7 Connect Bluetooth

You can record and hear the sound contained in the videos or images via bluetooth headsets after pairing the device with bluetooth headsets successfully.

Steps

1. Select ⚙ from the main menu.
2. Go to **Local Settings → Device Settings → Bluetooth** .
3. Tap on ◯ to enable the bluetooth.

   Note

   You can also press ⮌ or **OK** to quit pairing.

   The device will search the nearby enabled bluetooth headsets and pair them automatically.

Result

After pairing you can record and hear the sound via the headsets while recording and playing the video or image.

Chapter 8 Set LED Light

Go to **Local Settings → Device Settings → Light Supplement** . Tap to enable LED light, or press △ in the live view to enable/disable the LED light.

Chapter 9 Thermal View APP Connection

The device supports both Wi-Fi connection and WLAN hot spot. Connect the device to Thermal View client software, and you can control the device via mobile client.

9.1 Connect via Wi-Fi

Before You Start

Download and install client software on your phone.

Steps

1. Go to **Local Settings → Device Settings → Wi-Fi** .
2. Tap to enable Wi-Fi, and the searched Wi-Fi will be listed as below.

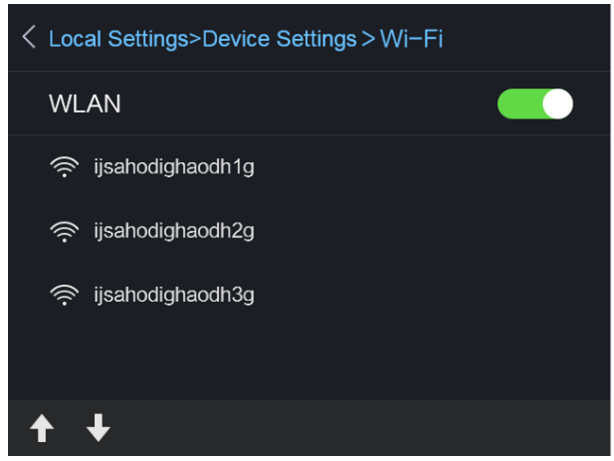

Figure 9-1 Wi-Fi List

3. Select Wi-Fi and enter password to show the keypad interface.

Note

DO NOT tap **enter** or **space**, or the password may be incorrect.

4. Tap **Close** to hide the keypad.
5. Tap **OK**.
6. Launch the app and follow the startup wizard to create, and register an account.
7. Add the device to online devices.

Result

You can view the live view, capture snapshots, and record videos via the client.

9.2 Connect via Hot Spot

Before You Start

Download and install client software on your phone.

Steps

1. Go to **Local Settings → Device Settings → Wi-Fi Hotspot Settings** .
2. Tap to enable WLAN hot spot function.
3. Tap **Set Hot Spot** to set the WLAN hot spot. The hot spot name and password display automatically.

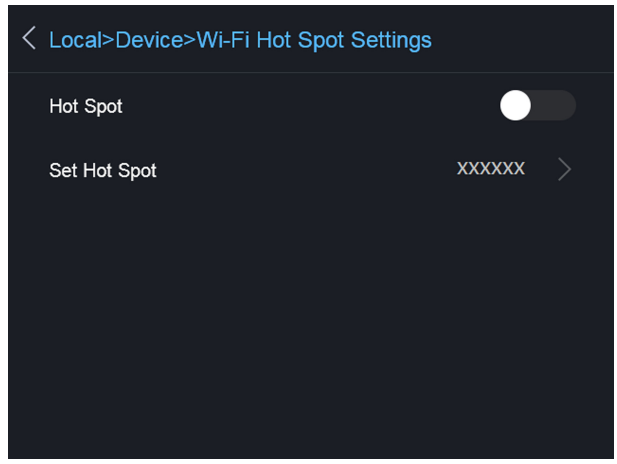

Figure 9-2 Set Hot Spot

4. Edit the hot spot name and password, show the keypad interface.

Note

DO NOT tap **enter** or **space**, and at least 8 characters, or the password may be incorrect.

5. Tap **Close** to hide the keypad.
6. Connect your phone to the WLAN Hot Spot of the device.
7. Launch the app and follow the startup wizard to create, and register an account.
8. Select Wi-Fi configuration in the software, enter the serial number of device to add the device. Refer to the manual of client software for details.

Result

You can view the live view, capture snapshots, and record videos via the client.

Chapter 10 Maintenance

10.1 View Device Information

Go to **Local Settings → Device Information** to view the device information.

10.2 Set Date and Time

Steps

1. Go to **Local Settings → Device Settings → Time and Date** .
2. Set the date and time.
3. Press ⇧ to save and exit.

Note

Go to **Local Settings → Image Settings → Display Settings** to enable or disable time and date display.

10.3 Upgrade Device

Steps

1. Connect the device to your PC with cable and open the detected disk.
2. Copy the upgrade file and paste it to the root directory of the device.
3. Disconnect the device from your PC.
4. Reboot the device and then it will upgrade automatically. The upgrading process will be displayed in the main interface.

Note

After upgrading, the device reboots automatically. You can view the current version in **Local Settings → Device Information** .

10.4 Restore Device

Go to **Local Settings → Device Settings → Device Initialization** to initialize the device and restore default settings.

Chapter 11 Appendix

11.1 Common Material Emissivity Reference

Material	Emissivity
Human Skin	0.98
Printed Curcuit Board	0.91
Concrete	0.95
Ceramic	0.92
Rubber	0.95
Paint	0.93
Wood	0.85
Pitch	0.96
Brick	0.95
Sand	0.90
Soil	0.92
Cloth	0.98
Hard Paperboard	0.90
White Paper	0.90
Water	0.96

11.2 Device Command

Scan the following QR code to get device common serial port commands.

Note that the command list contains the commonly used serial port commands for HikMicro thermal cameras.

11.3 Device Communication Matrix

Scan the following QR code to get device communication matrix.

Note that the matrix contains all communication ports of HikMicro thermal cameras.

11.4 FAQ

Scan the following QR code to get device common FAQ.

HIKMICRO

See the World in a New Way