Thermal Image Scope

User Manual

Legal Information

© 2020 Hangzhou Microimage Software Co., Ltd. All rights reserved.

About this Manual

The Manual includes instructions for using and managing the Product. Pictures, charts, images and all other information hereinafter are for description and explanation only. The information contained in the Manual is subject to change, without notice, due to firmware updates or other reasons. Please find the latest version of this Manual at the HIKMICRO website (www.hikmicrotech.com/).

Please use this Manual with the guidance and assistance of professionals trained in supporting the Product.

Trademarks Acknowledgement

HIKMICRO and other HIKMICRO's trademarks and logos are the properties of HIKMICRO in various jurisdictions.

Other trademarks and logos mentioned are the properties of their respective owners.

LEGAL DISCLAIMER

TO THE MAXIMUM EXTENT PERMITTED BY APPLICABLE LAW, THIS MANUAL AND THE PRODUCT DESCRIBED, WITH ITS HARDWARE, SOFTWARE AND FIRMWARE, ARE PROVIDED "AS IS" AND "WITH ALL FAULTS AND ERRORS". HIKMICRO MAKES NO WARRANTIES, EXPRESS OR IMPLIED, INCLUDING WITHOUT LIMITATION, MERCHANTABILITY, SATISFACTORY QUALITY, OR FITNESS FOR A PARTICULAR PURPOSE. THE USE OF THE PRODUCT BY YOU IS AT YOUR OWN RISK. IN NO EVENT WILL HIKMICRO BE LIABLE TO YOU FOR ANY SPECIAL, CONSEQUENTIAL, INCIDENTAL, OR INDIRECT DAMAGES, INCLUDING, AMONG OTHERS, DAMAGES FOR LOSS OF BUSINESS PROFITS, BUSINESS INTERRUPTION, OR LOSS OF DATA, CORRUPTION OF SYSTEMS, OR LOSS OF DOCUMENTATION, WHETHER BASED ON BREACH OF CONTRACT, TORT (INCLUDING NEGLIGENCE), PRODUCT LIABILITY, OR OTHERWISE, IN CONNECTION WITH THE USE OF THE PRODUCT, EVEN IF HIKMICRO HAS BEEN ADVISED OF THE POSSIBILITY OF SUCH DAMAGES OR LOSS.

YOU ACKNOWLEDGE THAT THE NATURE OF INTERNET PROVIDES FOR INHERENT SECURITY RISKS, AND HIKMICRO SHALL NOT TAKE ANY RESPONSIBILITIES FOR ABNORMAL OPERATION, PRIVACY LEAKAGE OR OTHER DAMAGES RESULTING FROM CYBER-ATTACK, HACKER ATTACK, VIRUS INSPECTION, OR OTHER INTERNET SECURITY RISKS; HOWEVER, HIKMICRO WILL PROVIDE TIMELY TECHNICAL SUPPORT IF REQUIRED.

YOU AGREE TO USE THIS PRODUCT IN COMPLIANCE WITH ALL APPLICABLE LAWS, AND YOU ARE SOLELY RESPONSIBLE FOR ENSURING THAT YOUR USE CONFORMS TO THE APPLICABLE LAW. ESPECIALLY, YOU ARE RESPONSIBLE, FOR USING THIS PRODUCT IN A MANNER THAT DOES NOT INFRINGE ON THE RIGHTS OF THIRD PARTIES, INCLUDING WITHOUT LIMITATION, RIGHTS OF PUBLICITY, INTELLECTUAL PROPERTY RIGHTS, OR DATA PROTECTION AND OTHER PRIVACY RIGHTS. YOU SHALL NOT USE THIS PRODUCT FOR ANY PROHIBITED END-USES, INCLUDING THE DEVELOPMENT OR PRODUCTION OF WEAPONS OF MASS DESTRUCTION, THE DEVELOPMENT OR PRODUCTION OF CHEMICAL OR BIOLOGICAL WEAPONS, ANY ACTIVITIES IN THE CONTEXT RELATED TO ANY NUCLEAR EXPLOSIVE OR UNSAFE NUCLEAR FUEL-CYCLE, OR IN SUPPORT OF HUMAN

RIGHTS ABUSES.
IN THE EVENT OF ANY CONFLICTS BETWEEN THIS MANUAL AND THE APPLICABLE LAW, THE LATER PREVAILS.

Regulatory Information

FCC Information

Please take attention that changes or modification not expressly approved by the party responsible for compliance could void the user's authority to operate the equipment.
FCC compliance: This equipment has been tested and found to comply with the limits for a Class B digital device, pursuant to part 15 of the FCC Rules. These limits are designed to provide reasonable protection against harmful interference in a residential installation. This equipment generates, uses and can radiate radio frequency energy and, if not installed and used in accordance with the instructions, may cause harmful interference to radio communications. However, there is no guarantee that interference will not occur in a particular installation. If this equipment does cause harmful interference to radio or television reception, which can be determined by turning the equipment off and on, the user is encouraged to try to correct the interference by one or more of the following measures:
—Reorient or relocate the receiving antenna.
—Increase the separation between the equipment and receiver.
—Connect the equipment into an outlet on a circuit different from that to which the receiver is connected.
—Consult the dealer or an experienced radio/TV techniciaan for help

FCC Conditions
This device complies with part 15 of the FCC Rules. Operation is subject to the following two conditions:

1. This device may not cause harmful interference.
2. This device must accept any interference received, including interference that may cause undesired operation.

EU Conformity Statement

This product and - if applicable - the supplied accessories too are marked with "CE" and comply therefore with the applicable harmonized European standards listed under the EMC Directive 2014/30/EU, RE Directive 2014/53/EU,the RoHS Directive 2011/65/EU

2012/19/EU (WEEE directive): Products marked with this symbol cannot be disposed of as unsorted municipal waste in the European Union. For proper recycling, return this product to your local supplier upon the purchase of equivalent new equipment, or dispose of it at designated collection points. For more information see: www.recyclethis.info

2006/66/EC (battery directive): This product contains a battery that cannot be disposed of as unsorted municipal waste in the European Union. See the product documentation for specific battery information. The battery is marked with this symbol, which may include lettering to indicate cadmium (Cd), lead (Pb), or mercury (Hg). For proper recycling, return the battery to your supplier or to a designated collection point. For more information see:www.recyclethis.info

Industry Canada ICES-003 Compliance

This device meets the CAN ICES-3 (B)/NMB-3(B) standards requirements.

1. This device complies with Industry Canada licence-exempt RSS standard(s). Operation is subject to the following two conditions: this device may not cause interference, and
2. this device must accept any interference, including interference that may cause undesired operation of the device.

1. Le présent appareil est conforme aux CNR d'Industrie Canada applicables aux appareils radioexempts de licence. L'exploitation est autorisée aux deux conditions suivantes : l'appareil ne doit pas produire de brouillage, et
2. l'utilisateur de l'appareil doit accepter tout brouillage radioélectrique subi, même si le brouillage est susceptible d'en compromettre le fonctionnement.

Under Industry Canada regulations, this radio transmitter may only operate using an antenna of a type and maximum (or lesser) gain approved for the transmitter by Industry Canada. To reduce potential radio interference to other users, the antenna type and its gain should be so chosen that the equivalent isotropically radiated power (e.i.r.p.) is not more than that necessary for successful communication.
Conformément à la réglementation d'Industrie Canada, le présent émetteur radio peut fonctionner avec une antenne d'un type et d'un gain maximal (ou inférieur) approuvé pour l'émetteur par Industrie Canada. Dans le but de réduire les risques de brouillage radioélectrique à l'intention des autres utilisateurs, il faut choisir le type d'antenne et son gain de sorte que la puissance isotrope rayonnée équivalente (p.i.r.e.) ne dépasse pas l'intensité nécessaire à l'établissement d'une communication satisfaisante.

Symbol Conventions

The symbols that may be found in this document are defined as follows.

Symbol	Description
Danger	Indicates a hazardous situation which, if not avoided, will or could result in death or serious injury.
Caution	Indicates a potentially hazardous situation which, if not avoided, could result in equipment damage, data loss, performance degradation, or unexpected results.
Note	Provides additional information to emphasize or supplement important points of the main text.

Safety Instruction

These instructions are intended to ensure that user can use the product correctly to avoid danger or property loss.

Laws and Regulations

- Use of the product must be in strict compliance with the local electrical safety regulations.

Transportation

- Keep the device in original or similar packaging while transporting it.
- Keep all wrappers after unpacking them for future use. In case of any failure occurred, you need to return the device to the factory with the original wrapper. Transportation without the original wrapper may result in damage on the device and the company shall not take any responsibilities.
- DO NOT drop the product or subject it to physical shock. Keep the device away from magnetic interference.

Power Supply

- Please purchase the charger by yourself. Input voltage should meet the Limited Power Source (5 VDC, 2A) according to the IEC61010-1 standard. Please refer to technical specifications for detailed information.
- Make sure the plug is properly connected to the power socket.
- DO NOT connect multiple devices to one power adapter, to avoid over-heating or fire hazards caused by overload.

Battery

- Improper use or replacement of the battery may result in explosion hazard. Replace with the same or equivalent type only. The battery type is CR123A*2/RCR123A*2. Dispose of used batteries in conformance with the instructions provided by the battery manufacturer.
- For long-term storage of the battery, make sure it is fully charged every half year to ensure the battery quality. Otherwise, damage may occur.
- Do not charge other battery types with the supplied charger. Confirm there is no flammable material within 2 m of the charger during charging.

Maintenance

- If the product does not work properly, please contact your dealer or the nearest service center. We shall not assume any responsibility for problems caused by unauthorized repair or maintenance.
- A few device components (e.g., electrolytic capacitor) require regular replacement. The average lifespan varies, so periodic checking is recommended. Contact your dealer for details.
- Wipe the device gently with a clean cloth and a small quantity of ethanol, if necessary.
- If the equipment is used in a manner not specified by the manufacturer, the protection provided by the device may be impaired.

- It is recommended to reboot the device every 2 hours when using it to ensure the device performance.

Using Environment

- Make sure the running environment meets the requirement of the device. The operating temperature shall be -20°C to 55°C (-4°F to 131°F), and the operating humidity shall be 95% or less.
- DO NOT expose the device to high electromagnetic radiation or dusty environments.
- DO NOT aim the lens at the sun or any other bright light.

Emergency

- If smoke, odor, or noise arises from the device, immediately turn off the power, unplug the power cable, and contact the service center.

Manufacture Address

Room 313, Unit B, Building 2, 399 Danfeng Road, Xixing Subdistrict,Binjiang District, Hangzhou, Zhejiang 310052, China
Hangzhou Microimage Software Co., Ltd

Chapter 1 Overview

1.1 Device Description

The thermal image scope is equipped with high-sensitivity IR detector, and adopts advanced thermal imaging technology, to get clear view in poor visibility or dark environment.
It helps to aim at the target, and measuring the distance. It can aim at the moving target and meets the outdoor condition. The device can be widely used in patrolling, searching and rescuing, hiking, hunting, and travel, etc.

1.2 Main Function

- Distance Measurement: The device can detect the distance between the target and the device.
- Highest Temperature Tracking: The device can detect the highest temperature in the scene and mark the spot.
- Range Table Correction: The crosshair helps you to aim at the target fast and accurately.
- Trajectory Correction: The cursor helps you to shot the target with high accuracy.
- Client Software Connection: The device can capture snapshots, record videos, and set parameters by T-Vision APP after being connected to your phone via hotspot.
- Image Correction: The device supports DPC (Defective Pixel Correction) and FFC (Flat Field Correction) which can optimize the image quality.

1.3 Appearance

1.3.1 Button

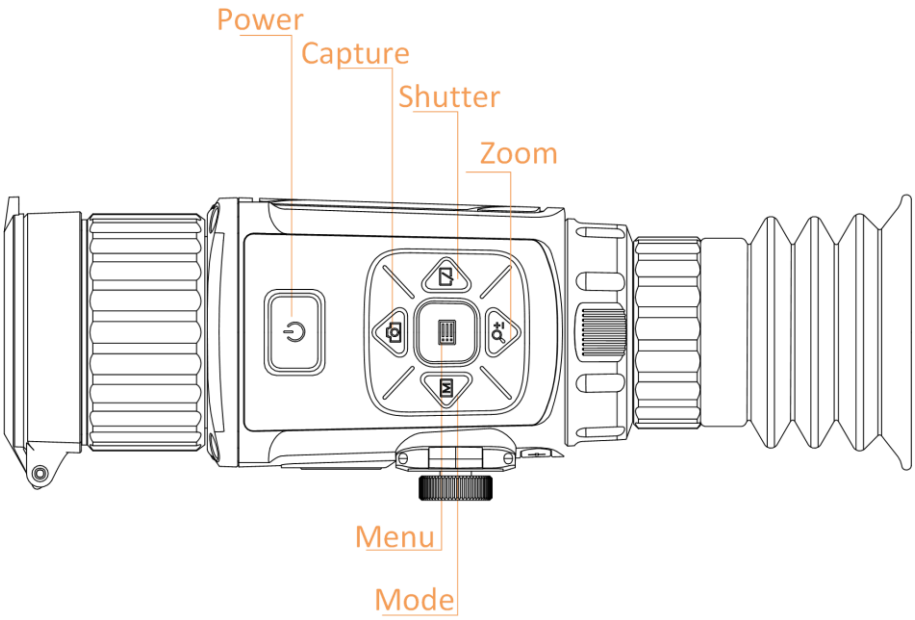

Figure 1-1 Buttons on Device

Table 1-1 Function of Buttons

Icon	Button	Description
	Power	● Press: Standby Mode/Wake up Device ● Hold: Power On/Off
	Mode	● Press: Switch Palettes
	Capture	● Press: Capture ● Hold: Start/Stop Record Video
	Menu	● Press: Enable/Disable OSD ● Hold: Menu Operation
	Zoom	● Press: Switch Digital Zoom ● Hold: Enable/Disable Range Table

	Shutter	● Press: Correct Non-uniformity of Display

1.3.2 Interface

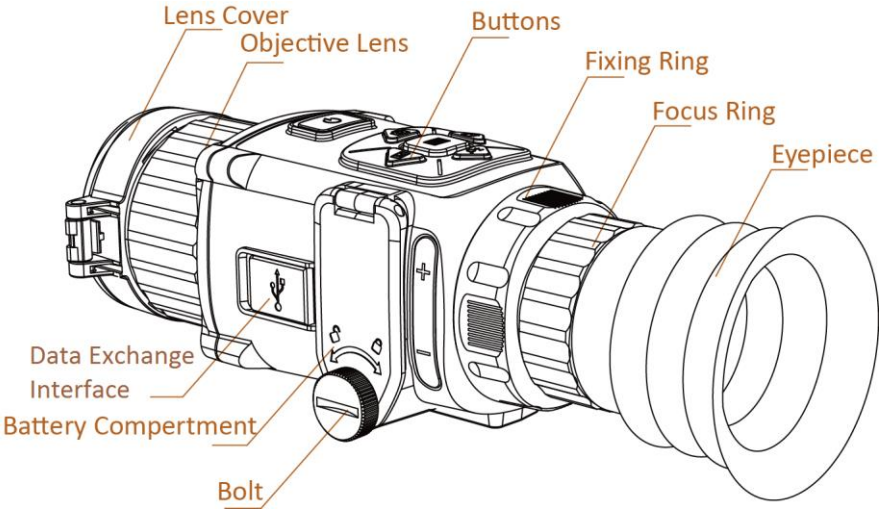

Figure 1-2 Interfaces of Handheld Camera

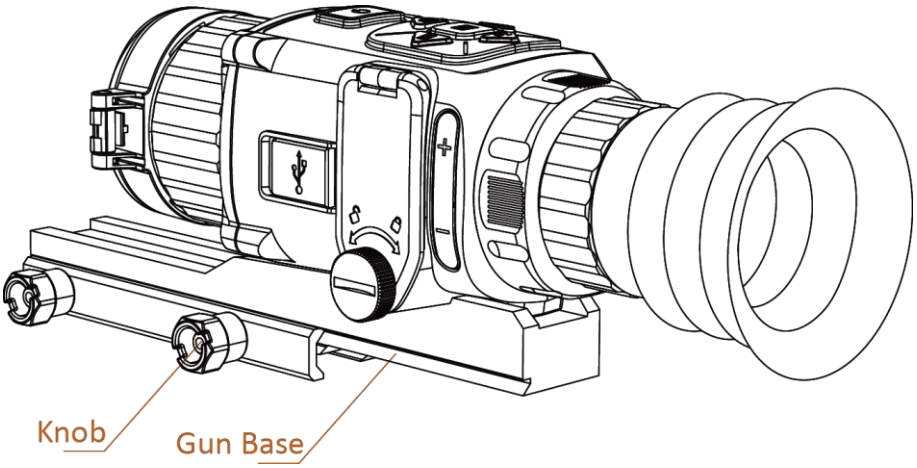

Figure 1-3 Interfaces of Thermal Telescope

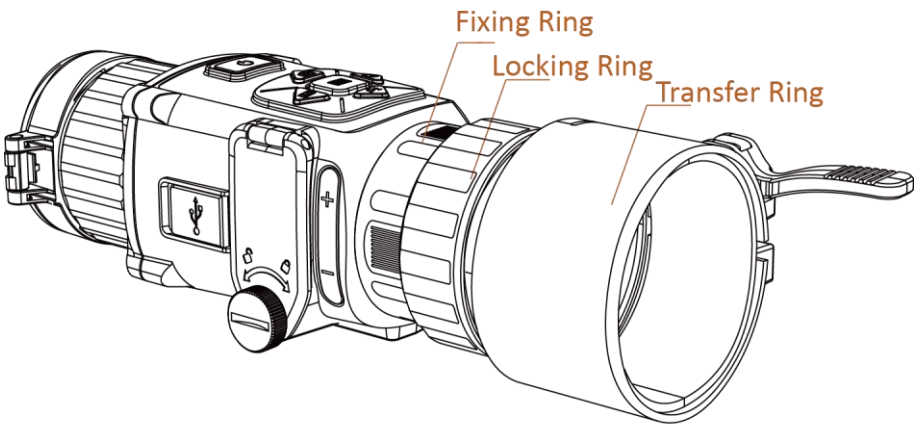

Figure 1-4 Interfaces of Thermal Camera with Daylight Scope

Table 1-2 Interface Description

Component	Function
Objective Lens	Adjust the distance between the lens and the sensor to view the target much clearer.
Focus Ring	Adjust the sight view.
Bolt	Loosen the bolt to install the batteries.
Knob	Secure the device to the gun base.
Data Exchange Interface	Connect with the output cable.
Transfer Ring	Connect with a daylight scope.

Chapter 2 Preparation

2.1 Cable Connection

Connect the device and power adaptor with a type-C cable to power on the device. Alternatively, connect the device and PC to export files.

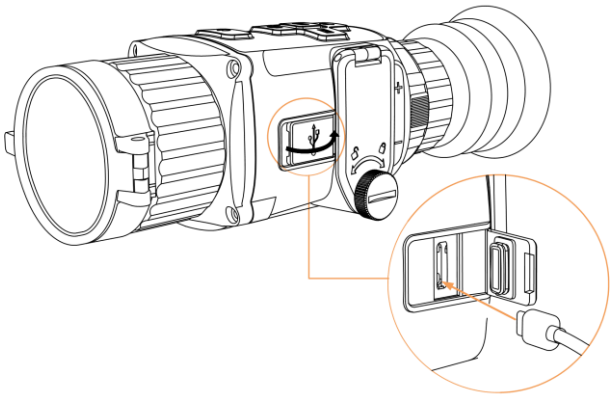

Figure 2-1 Cable Interface

2.2 Install Battery

Insert the batteries into the battery compartment.

Steps

1. Rotate the knob anticlockwise to loosen it.

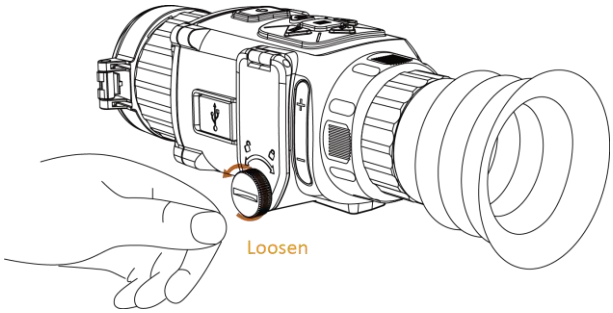

Figure 2-2 Loosen Knob

2. Make sure the battery's positive terminal and negative terminal are installed correctly.

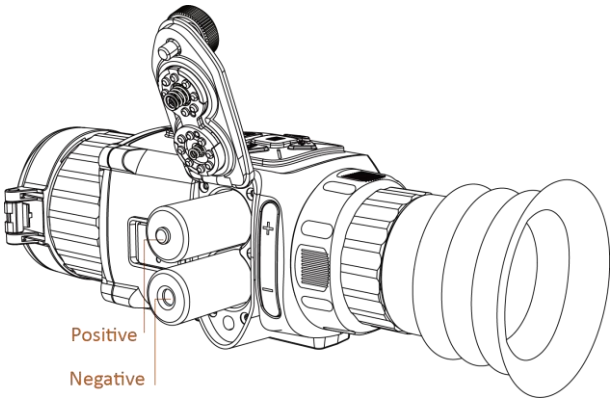

Figure 2-3 Install Batteries

3. Rotate the knob clockwise to tighten it.

   Take the battery away if the device is not used for a long time.

2.2.1 Select Battery Type

You can change the battery type according to your need. Select the correct battery voltage in the device menu.

Steps

1. In the view mode, hold to show the menu.
2. Select , and press to switch the voltage.

2.3 Secure Device

Before You Start

- Turn off the device first.
- Use the Non-dust cloth to clean the device base and the gun's base.

Steps

1. Install the device to the gun base as arrow 1.
2. Insert the screws, and tighten them.

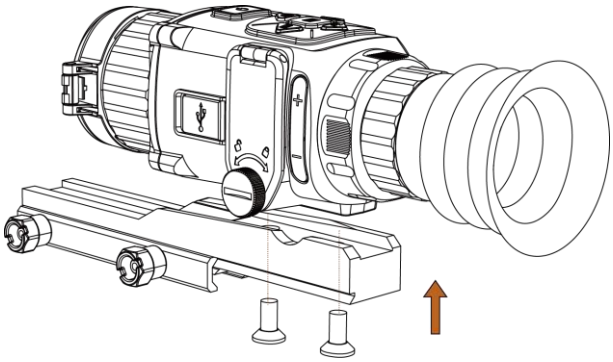

Figure 2-4 Tighten Screws

3. Tighten the knobs to secure the device as arrow 2.

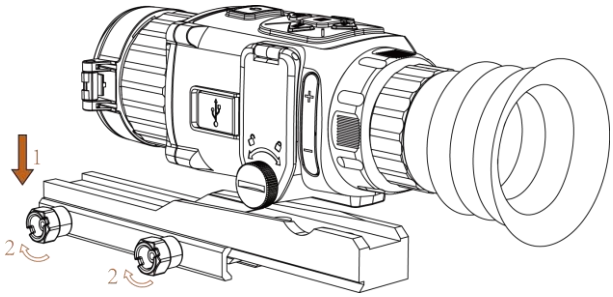

Figure 2-5 Secure the Device

2.4 Change Eyepiece

The device can be used as a handheld observational camera or a clip-on scope. You can change the eyepiece to realize different use of the device.

Steps

1. Rotate the fixing ring of eyepiece anticlockwise to remove it.
2. Align the eyepiece with the grooves of device, and rotate the eyepiece clockwise to tighten it.

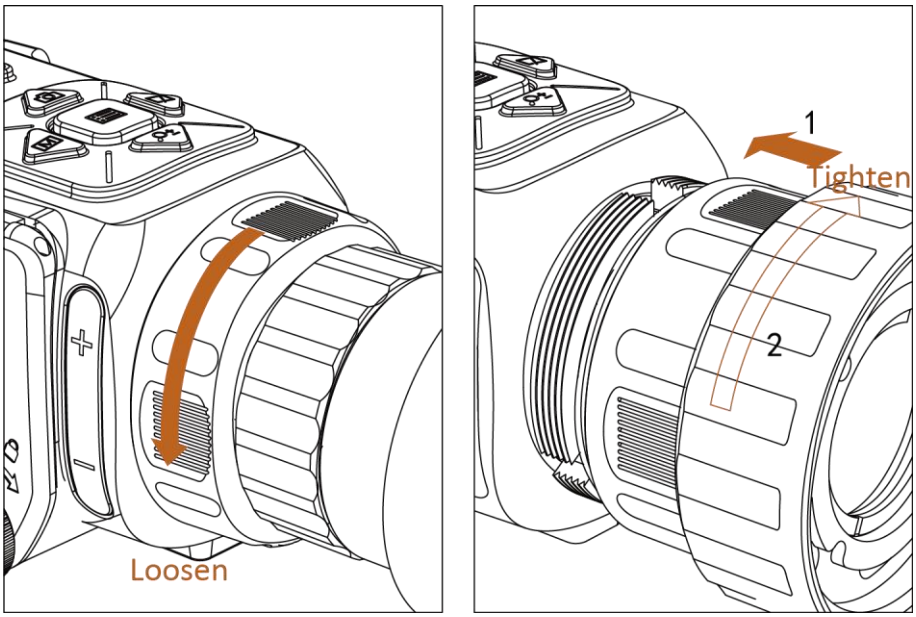

Figure 2-6 Change Eyepiece

2.5 Install Daylight Scope

You can use the device together with a daylight scope to view the target clear in daytime.

Steps

1. Install the daylight scope into the transfer ring as arrow 1.
2. Lock the buckle to fix the daylight scope as arrow 2.

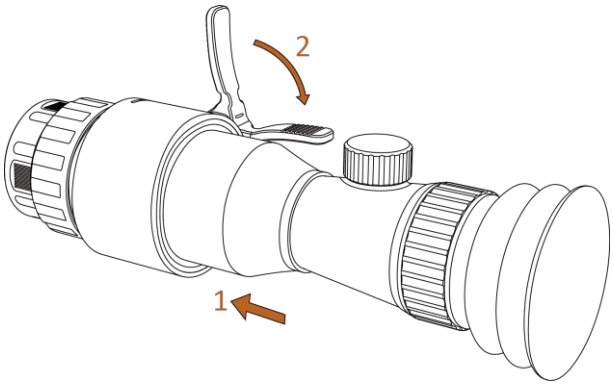

Figure 2-7 Install Daylight Scope

2.6 Power On/Off

Power On

When the battery is enough, press ⏻ to power on the device.

Power Off

When the device is turned on, hold for 2 seconds to power off the device.

2.7 Menu Description

When the device is turned on, press to display the OSD menu.

- Press to move the cursor up.
- Press to move the cursor down.
- Press to move the cursor left.
- Press to move the cursor right.
- Press to confirm.

Chapter 3 Image Settings

3.1 Adjust Diopter

Steps

1. Power on the device.
2. Open the lens cover.
3. Hold the device and make sure the eyepiece covers your eye.
4. Adjust the focus ring until the OSD text or image is clear.

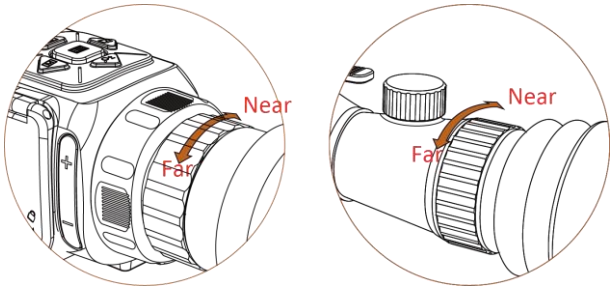

Figure 3-1 Adjust Focus Ring

Note

When adjusting diopter, DO NOT touch the surface of lens to avoid smearing the lens.

3.2 Adjust Brightness

In the menu mode, select and press to adjust brightness. In white hot mode, the higher the value of brightness is, the brighter the image is. The image effect in white hot mode is showed as picture below and effect in black hot mode is opposite.

Figure 3-2 Adjust Brightness in White Hot Mode

3.3 Adjust Contrast

In the menu mode, select and press to adjust image contrast.

3.4 Select Scene

You can select proper scene according to actual using scene to improve the display effect.

Steps

1. Hold to go to the menu.
2. Select and press to switch scene.
   – refers to recognition mode and is recommended in normal scene.
   – refers to jungle mode and is recommended in hunting environment.
3. Hold to save settings and exit.

3.5 Set Palettes

You can select different palettes to display the same scene in different effects. Press M to switch palettes.

White Hot

The hot part is light-colored in view. The higher the temperature is, the lighter the color is.

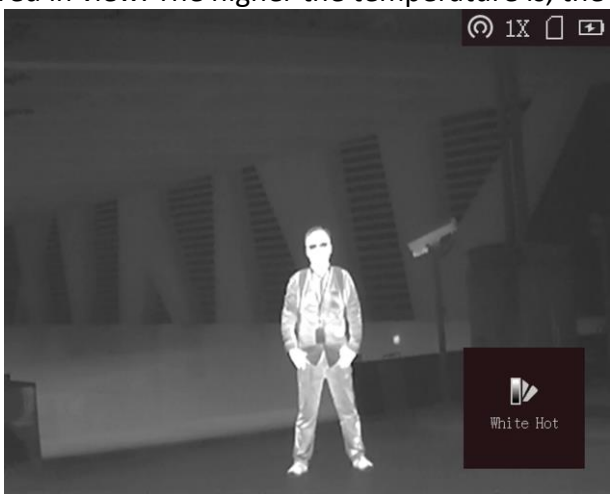

Black Hot

The hot part is black-colored in view. The higher the temperature is, the more black the color is.

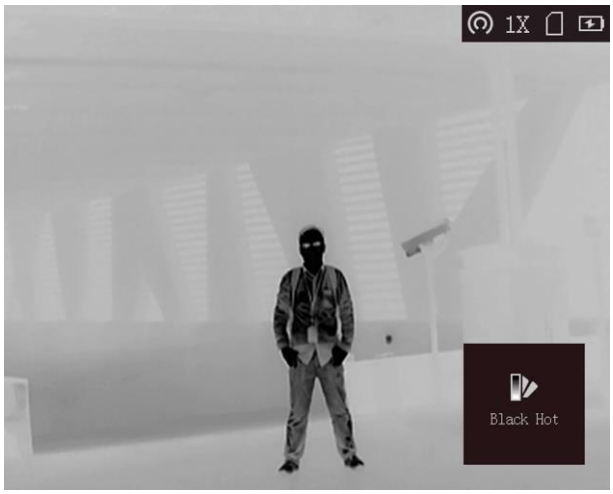

Red Hot

The hot part is red-colored in view. The higher the temperature is, the redder the color is.

Fusion

From high temperature to low temperature, the image is colored in from white, yellow, red, pink to purple.

3.6 Correct Defective Pixel

The device can correct the defective pixels on the screen which are not performed as expected.

Steps

1. Hold to show the menu.
2. Select .
3. Press , , , and to move the cursor to the position of dead pixel.
4. Press to correct the dead pixel.

3.7 Flat Field Correction

This function can correct non-uniformity of display.

Steps

1. Hold to go to the menu.
2. Select and press to switch FFC mode.
   - Manual: Hold in live view to correct the non-uniformity of display.
   - Auto: The device performs FFC automatically according to the set schedule when switching on the camera.
   - External: Cover the lens cover, then hold in live view to correct the non-uniformity of display.
3. Hold to save the settings and exit.

3.8 Set Picture in Picture Mode

Steps

1. In the view mode, hold to show the menu.
2. Select and enter PIP mode. The details show in the upper left corner.
   - When range table is enabled, the PIP view is the detail of crosshair.
   - When range table is not enabled, the PIP view is the detail of central part.
3. Press to switch the PIP type. **Upper Left**, **Upper Middle**, **Upper Right**, and **OFF** are selectable.

Note

When you select **Upper Right** as PIP type, the OSD will be blocked.

Figure 3-3 Set Picture in Picture Mode

4. Hold to exit.

   If digital zoom is enabled, the PIP view also zooms. If the digital zoom ratio exceeds 4, the PIP does not zoom.

3.9 Adjust Digital Zoom

You can zoom the image by using this function.
Press in the view mode, the live view switches between 1 ×, 2 ×, 4 ×, and 8 ×.

Note

This function varies according to different camera models.

3.10 Set OSD

In the live view interface, press to display or hide the OSD information.

Chapter 4 Highest Temperature Tracking

The device can detect the highest temperature spot in the scene and mark it on display.
In the menu, select and press to mark the spot of highest temperature.
When the function is enabled, displays in the spot of highest temperature. When the scene changes, the moves.

Chapter 5 Aiming Point Settings

5.1 Correct Range Table

Enable the range table to aim at the target.

Steps

1. In the view mode, hold to show the menu.
2. Select . A crosshair shows in the center of the view.
3. Press , or to select the range table type. Then press to confirm.
4. Press , , , and to move the crosshair position. The coordinate shows the current position of the crosshair.
5. Hold to save and exit.

5.2 Correct Trajectory

Enable the trajectory correction to shot the target with high accuracy by marking the offset between the big crosshair and small crosshair.

Before You Start

Select the desired range table type.

Steps

1. In the view mode, hold to show the menu.
2. Select . Two crosshairs show in the view. The big one is range table correction crosshair, and the small one is trajectory correction crosshair.
3. Set the distance.
   1. Press , and then press or to adjust the distance between the target and the device.
   2. Press to save the distance settings.

4. Set the crosshair position of trajectory correction.
   1. Aim the big crosshair at the target.
   2. Shot and mark the actual drop point of the bullet.
   3. Press , , , or to move the small cursor to the position of the actual drop point. You can view the coordinate of the cursor in the view.

5. Press to switch to the next distance.
6. Repeat step 3 to 4 to set another trajectory correction position.
7. Hold to exit.

5.3 Set Crosshair Color

The function can change the color of the crosshairs in range table correction display, trajectory correction display, and distance measurement display.

Before You Start

Enable range table correction first.

Steps

1. In the view mode, hold to show the menu.
2. Select and press to switch the color of crosshair. **White**, **Green**, and **Red** are selectable.
3. Hold to save and exit.

Chapter 6 Measure the Distance

The device can detect the distance between the target and the observation position.

Before You Start

When measuring the distance, keep the hand and the position steady. Otherwise, the accuracy may be affected.

Steps

1. Hold to show the menu.
2. Select and press to go to the setting interface.
   1) Press or to select the target from **Deer**, **Wolf**, **Bear**, and **Custom**.
   2) Set the target height.

   Note

   The available height ranges from 0.1 m to 9.9 m.

   3) Press to confirm.
3. Align the center of top mark with the edge of target top. Press .

Figure 6-1 Set the Edge of Target Top

   The cursor blinks on the top edge of the target.
4. Align the center of bottom mark with the edge of target bottom. Press .

Figure 6-2 Set the Edge of Target Bottom

Result

The left top of the image displays the distance measurement result and the height of the target.

Figure 6-3 Measurement Result

Note

Go to distance measurement interface, and press to view the result of the previous measuring target.

Chapter 7 Picture and Video

You can manually record video or capture picture when displaying live view.

7.1 Capture Picture

On the main live view page, press to capture picture.

Note

● When capturing succeeds, the image freezes for 1 second and a prompt shows on the display. For exporting captured pictures, refer to ***Export Files***.

7.2 Record Video

Steps

1. In the main live view, hold and start recording.

Figure 7-1 Start Recording

The left top of image displays the information of recording time.

2. Hold again to stop recording.

What to do next

For exporting recording files, refer to ***Export Files***.

7.3 Export Files

This function is used to export recorded videos and captured pictures.

Before You Start

Turn off hot spot function.

Steps

1. Connect the device and PC with cable.

Note

Make sure the device is turned off when connecting the cable.

2. Open computer disk and select the disk of device. Go to **DICM** → **100EZVIZ**.
3. Select and copy the files to PC.
4. Disconnect the device from your PC.

Note

- The device displays images when you connect it to PC. But functions such as recording, capturing and hot spot are disabled.
- When you connect the device to PC for the first time, it installs the drive program automatically.

Chapter 8 Client Software Connection

Connect the device to the T-Vision APP via hot spot, then you can capture picture, record video, or configure parameters on your phone.

Steps

1. Hold to show the menu of device.
2. Press to enable hot spot function.
3. Turn on the WLAN of your phone and connect to the hot spot.
   - Hot Spot Name: HIK-IPTS Serial No.
   - Hot Spot Password: the last 9 digits of serial No.
4. Search the T-Vision on App Store (iOS System) or Google Play™ (Android System) to download it, or scan the QR code to download and install the app.

Android System

iOS System

5. Open the APP and connect your phone with the device. You can view the interface of device on your phone.

Note

The hot spot function will be turned off automatically when power is less than 15%.

Chapter 9 CVBS Output

View the device image on the display unit for details.

Before You Start

Connect the device to the display unit via CVBS interface of the aviation plug.

Steps

1. Hold to show the menu.
2. Select **CVBS**, and press to switch on CVBS.

Chapter 10 Language Settings

Go to the device menu, select , and press to switch the device language.

Chapter 11 Maintenance

This part introduces the operation of checking device information, upgrading device, and restoring to defaults, etc.

11.1 View Device Information

Steps

1. Hold to show the menu of device.
2. Select , and press . You can view the device information such as version, and serial No.

11.2 Upgrade Device

Before You Start

Please get the upgrade package first.

Steps

1. Connect the device to your PC with cable.
2. Open the detected disk, copy the upgrade file and paste it to the root directory of the device.
3. Disconnect the device from your PC.
4. Reboot the device.

Result

The device upgrades automatically. The upgrading process will be displayed in the main interface.

11.3 Restore Device

Steps

1. Hold to show the menu of device.
2. Select , and press to restore the device to defaults according to the prompt.

Chapter 12 Frequently Asked Questions

12.1 Why is the monitor off?

Check whether the device is off-battery. Check the monitor after charging the device for 5 minutes.

12.2 The image is not clear, how to adjust it?

Adjust the diopter adjustment knob until the image is clear. Refer to section Adjust Diopter.

12.3 Capturing or recording fails. What's the problem?

Check the following items.

- Whether the device is connected to your PC. Capturing or recording is disabled in this status.
- Whether the storage space is full.
- Whether the device is low-battery.

12.4 Why the PC cannot identify the device?

Check the following items.

- Whether the device is connected to your PC with supplied USB cable.
- If you use other USB cables, make sure the cable length is no longer than 1 m.
- Whether the hot spot function is turned on. If so, go to device menu and turn off hot spot.

Chapter 13 Appendix

13.1 Device Command

Scan the following QR code to get device common serial port commands.
Note that the command list contains the commonly used serial port commands for Hikmicro thermal cameras.

13.2 Device Communication Matrix

Scan the following QR code to get device communication matrix.
Note that the matrix contains all communication ports of Hikmicro thermal cameras.

HIKMICRO

See the World in a New Way