Handheld Thermal Monucular Camera

User Manual

Legal Information

About this Manual

The Manual includes instructions for using and managing the Product. Pictures, charts, images and all other information hereinafter are for description and explanation only. The information contained in the Manual is subject to change, without notice, due to firmware updates or other reasons. Please find the latest version of this Manual at the company website Please use this Manual with the guidance and assistance of professionals trained in supporting the Product.

Trademarks Acknowledgement

Trademarks and logos mentioned are the properties of their respective owners.

LEGAL DISCLAIMER

TO THE MAXIMUM EXTENT PERMITTED BY APPLICABLE LAW, THIS MANUAL AND THE PRODUCT DESCRIBED, WITH ITS HARDWARE, SOFTWARE AND FIRMWARE, ARE PROVIDED “AS IS” AND “WITH ALL FAULTS AND ERRORS”. OUR COMPANY MAKES NO WARRANTIES, EXPRESS OR IMPLIED, INCLUDING WITHOUT LIMITATION, MERCHANTABILITY, SATISFACTORY QUALITY, OR FITNESS FOR A PARTICULAR PURPOSE. THE USE OF THE PRODUCT BY YOU IS AT YOUR OWN RISK. IN NO EVENT WILL OUR COMPANY BE LIABLE TO YOU FOR ANY SPECIAL, CONSEQUENTIAL, INCIDENTAL, OR INDIRECT DAMAGES, INCLUDING, AMONG OTHERS, DAMAGES FOR LOSS OF BUSINESS PROFITS, BUSINESS INTERRUPTION, OR LOSS OF DATA, CORRUPTION OF SYSTEMS, OR LOSS OF DOCUMENTATION, WHETHER BASED ON BREACH OF CONTRACT, TORT (INCLUDING NEGLIGENCE), PRODUCT LIABILITY, OR OTHERWISE, IN CONNECTION WITH THE USE OF THE PRODUCT, EVEN IF OUR COMPANY HAS BEEN ADVISED OF THE POSSIBILITY OF SUCH DAMAGES OR LOSS.
YOU ACKNOWLEDGE THAT THE NATURE OF INTERNET PROVIDES FOR INHERENT SECURITY RISKS, AND OUR COMPANY SHALL NOT TAKE ANY RESPONSIBILITIES FOR ABNORMAL OPERATION, PRIVACY LEAKAGE OR OTHER DAMAGES RESULTING FROM CYBER-ATTACK, HACKER ATTACK, VIRUS INSPECTION, OR OTHER INTERNET SECURITY RISKS; HOWEVER, OUR COMPANY WILL PROVIDE TIMELY TECHNICAL SUPPORT IF REQUIRED.
YOU AGREE TO USE THIS PRODUCT IN COMPLIANCE WITH ALL APPLICABLE LAWS, AND YOU ARE SOLELY RESPONSIBLE FOR ENSURING THAT YOUR USE CONFORMS TO THE APPLICABLE LAW. ESPECIALLY, YOU ARE RESPONSIBLE, FOR USING THIS PRODUCT IN A MANNER THAT DOES NOT INFRINGE ON THE RIGHTS OF THIRD PARTIES, INCLUDING WITHOUT LIMITATION, RIGHTS OF PUBLICITY, INTELLECTUAL PROPERTY RIGHTS, OR DATA PROTECTION AND OTHER PRIVACY RIGHTS.
YOU SHALL NOT USE THIS PRODUCT FOR ANY PROHIBITED END-USES, INCLUDING THE DEVELOPMENT OR PRODUCTION OF WEAPONS OF MASS DESTRUCTION, THE DEVELOPMENT OR PRODUCTION OF CHEMICAL OR BIOLOGICAL WEAPONS, ANY ACTIVITIES IN THE CONTEXT RELATED TO ANY NUCLEAR EXPLOSIVE OR UNSAFE NUCLEAR FUEL-CYCLE, OR IN SUPPORT OF HUMAN RIGHTS ABUSES.
IN THE EVENT OF ANY CONFLICTS BETWEEN THIS MANUAL AND THE APPLICABLE LAW, THE LATER PREVAILS.

Regulatory Information

FCC Information

Please take attention that changes or modification not expressly approved by the party responsible for compliance could void the user's authority to operate the equipment.
FCC compliance: This equipment has been tested and found to comply with the limits for a Class B digital device, pursuant to part 15 of the FCC Rules. These limits are designed to provide reasonable protection against harmful interference in a residential installation. This equipment generates, uses and can radiate radio frequency energy and, if not installed and used in accordance with the instructions, may cause harmful interference to radio communications. However, there is no guarantee that interference will not occur in a particular installation. If this equipment does cause harmful interference to radio or television reception, which can be determined by turning the equipment off and on, the user is encouraged to try to correct the interference by one or more of the following measures:
—Reorient or relocate the receiving antenna.
—Increase the separation between the equipment and receiver.
—Connect the equipment into an outlet on a circuit different from that to which the receiver is connected.
—Consult the dealer or an experienced radio/TV techniciaan for help

FCC Conditions
This device complies with part 15 of the FCC Rules. Operation is subject to the following two conditions:

1. This device may not cause harmful interference.
2. This device must accept any interference received, including interference that may cause undesired operation.

EU Conformity Statement

This product and - if applicable - the supplied accessories too are marked with "CE" and comply therefore with the applicable harmonized European standards listed under the EMC Directive 2014/30/EU, RE Directive 2014/53/EU,the RoHS Directive 2011/65/EU

2012/19/EU (WEEE directive): Products marked with this symbol cannot be disposed of as unsorted municipal waste in the European Union. For proper recycling, return this product to your local supplier upon the purchase of equivalent new equipment, or dispose of it at designated collection points. For more information see: www.recyclethis.info

2006/66/EC (battery directive): This product contains a battery that cannot be disposed of as unsorted municipal waste in the European Union. See the product documentation for specific battery information. The battery is marked with this symbol, which may include lettering to indicate cadmium (Cd), lead (Pb), or mercury (Hg). For proper recycling, return the battery to your supplier or to a designated collection point. For more information see:www.recyclethis.info

Industry Canada ICES-003 Compliance

This device meets the CAN ICES-3 (B)/NMB-3(B) standards requirements.

1. This device complies with Industry Canada licence-exempt RSS standard(s). Operation is subject to the following two conditions: this device may not cause interference, and
2. this device must accept any interference, including interference that may cause undesired operation of the device.

1. Le présent appareil est conforme aux CNR d'Industrie Canada applicables aux appareils radioexempts de licence. L'exploitation est autorisée aux deux conditions suivantes : l'appareil ne doit pas produire de brouillage, et
2. l'utilisateur de l'appareil doit accepter tout brouillage radioélectrique subi, même si le brouillage est susceptible d'en compromettre le fonctionnement.

Under Industry Canada regulations, this radio transmitter may only operate using an antenna of a type and maximum (or lesser) gain approved for the transmitter by Industry Canada. To reduce potential radio interference to other users, the antenna type and its gain should be so chosen that the equivalent isotropically radiated power (e.i.r.p.) is not more than that necessary for successful communication.
Conformément à la réglementation d'Industrie Canada, le présent émetteur radio peut fonctionner avec une antenne d'un type et d'un gain maximal (ou inférieur) approuvé pour l'émetteur par Industrie Canada. Dans le but de réduire les risques de brouillage radioélectrique à l'intention des autres utilisateurs, il faut choisir le type d'antenne et son gain de sorte que la puissance isotrope rayonnée équivalente (p.i.r.e.) ne dépasse pas l'intensité nécessaire à l'établissement d'une communication satisfaisante.

Symbol Conventions

The symbols that may be found in this document are defined as follows.

Symbol	Description
Danger	Indicates a hazardous situation which, if not avoided, will or could result in death or serious injury.
Caution	Indicates a potentially hazardous situation which, if not avoided, could result in equipment damage, data loss, performance degradation, or unexpected results.
Note	Provides additional information to emphasize or supplement important points of the main text.

Safety Instruction

These instructions are intended to ensure that user can use the product correctly to avoid danger or property loss.

Laws and Regulations

- Use of the product must be in strict compliance with the local electrical safety regulations.

Transportation

- Keep the device in original or similar packaging while transporting it.
- Keep all wrappers after unpacking them for future use. In case of any failure occurred, you need to return the device to the factory with the original wrapper. Transportation without the original wrapper may result in damage on the device and the company shall not take any responsibilities.
- Do not drop the product or subject it to physical shock. Keep the device away from magnetic interference.

Power Supply

- Please purchase the charger by yourself. Input voltage should meet the Limited Power Source (5 VDC, 2A) according to the IEC61010-1 standard. Please refer to technical specifications for detailed information.
- Make sure the plug is properly connected to the power socket.
- DO NOT connect multiple devices to one power adapter, to avoid over-heating or fire hazards caused by overload.

Battery

- The built-in battery cannot be dismantled. Please contact the manufacture for repair if necessary.
- For long-term storage of the battery, make sure it is fully charged every half year to ensure the battery quality. Otherwise, damage may occur.

Maintenance

- If the product does not work properly, please contact your dealer or the nearest service center. We shall not assume any responsibility for problems caused by unauthorized repair or maintenance.
- A few device components (e.g., electrolytic capacitor) require regular replacement. The average lifespan varies, so periodic checking is recommended. Contact your dealer for details.
- Wipe the device gently with a clean cloth and a small quantity of ethanol, if necessary.
- If the equipment is used in a manner not specified by the manufacturer, the protection provided by the device may be impaired.

Using Environment

- Make sure the running environment meets the requirement of the device. The operating

temperature shall be -30°C to 55°C (-22°F to 131°F), and the operating humidity shall be 95% or less.

- DO NOT expose the device to high electromagnetic radiation or dusty environments.
- DO NOT aim the lens at the sun or any other bright light.

Emergency

- If smoke, odor, or noise arises from the device, immediately turn off the power, unplug the power cable, and contact the service center.

Chapter 1 Overview

1.1 Brief Description

The handheld thermal monocular camera is a handheld device with functions of observation, highest temperature target tracking, distance measurement, Wi-Fi hot spot, and so on. The high-sensitivity built-in thermal detector provides you with clear view even in total darkness. The device is mainly applied to outdoor scenarios such as patrolling, law enforcement, searching and rescuing, drug enforcement, anti-smuggling, criminal seizing, hiking, travel, and hunting, etc.

1.2 Function

Distance Measurement

The device can detect the distance between the target and the observation position.

Highest Temperature Tracking

The device can detect the highest temperature in the scene and mark the spot. This function varies according to different camera models.

Image Correction

The device supports DPC (Defective Pixel Correction) and FFC (Flat Field Correction) which can optimize the image quality.

Client Software Connection

The device can capture snapshots, record videos, and set parameters by T-Vision APP after being connected to your phone via hot spot.

Storage

The built-in memory module supports video recording and snapshot capturing.

1.3 Appearance

1.3.1 Button

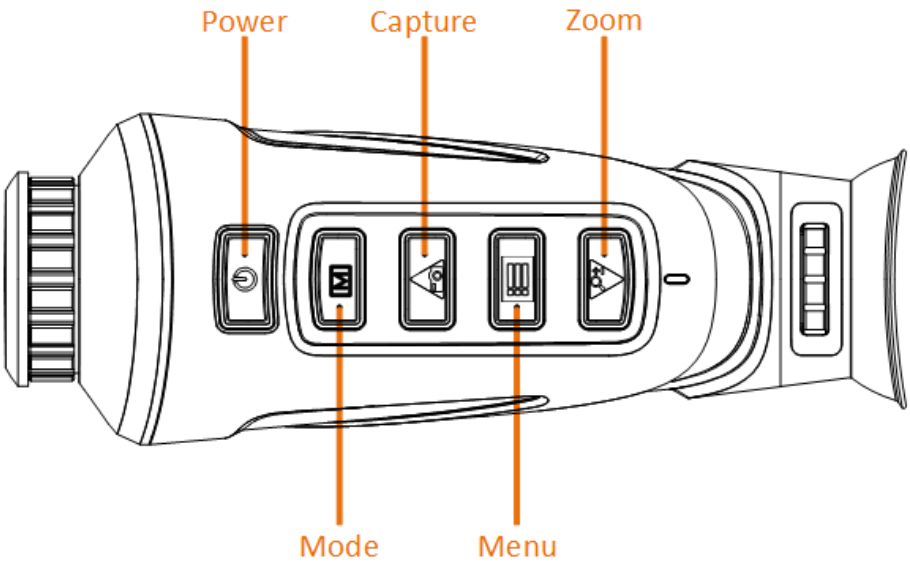

Figure 1-1 Buttons on The Device

Table 1-1 Function of Button

Icon	Button	Function
	Power	Hold: power on/off
	Mode	Press: palettes Hold: FFC
	Capture	Press: capture Hold: start/stop recording
	Menu	Press: standby mode on/off Hold: display menu or not
	Zoom	Press: start digital zoom

1.3.2 Interface

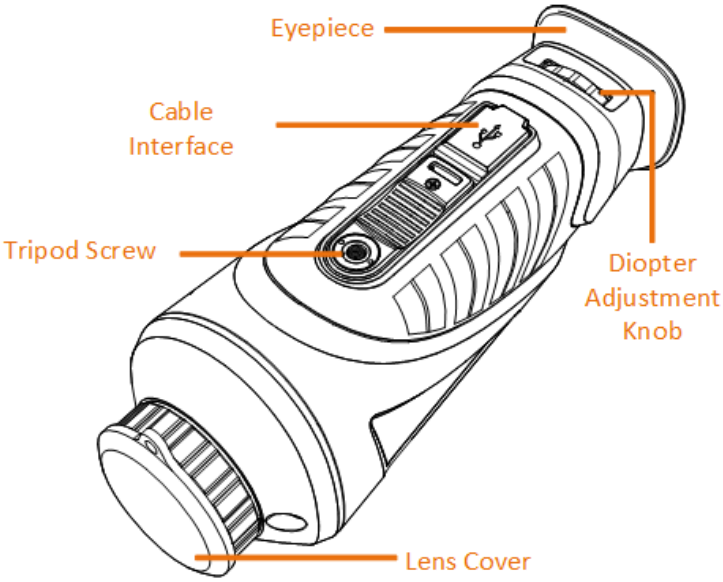

Figure 1-2 Overview of Interfaces

- Lens Cover: protect the lens from dust or scratch.
- Diopter Adjustment Knob: adjust the view according to your degree of myopia.
- Cable Interface: charge the device or export files with the supplied cable.
- Tripod Screw: connected to tripod.

Chapter 2 Preparation

2.1 Charge Device

After the device starts up, the OSD (on-screen display) shows the battery status. When the battery is low, charge the device and ensure it works properly.

Before You Start

- The charging temperature should be from 0 °C to 45 °C (32 °F to 113 °F).
- Charge the device with the delivered cable.

Steps

1. Lift the cable interface cover.
2. Plug in the cable and charge the device.

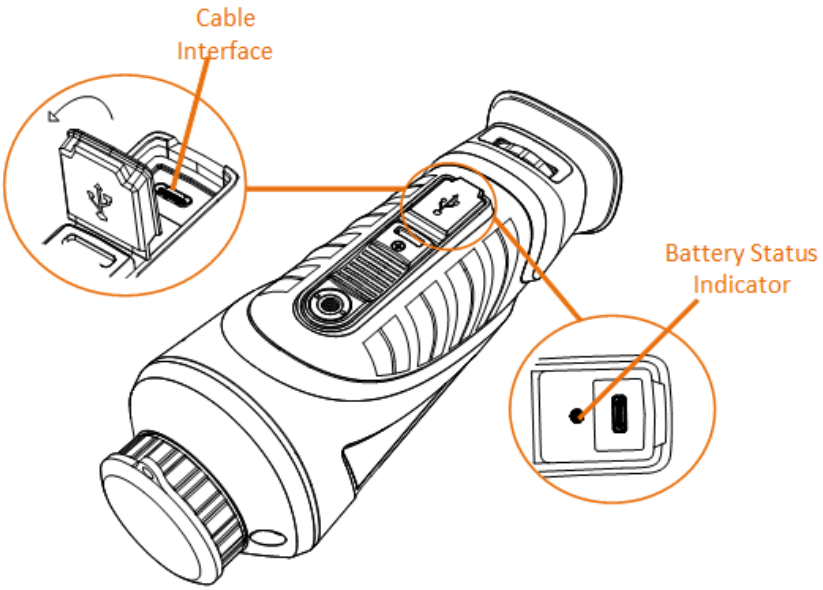

Figure 2-1 Cable Interface

- Flashing Red & Green: error occurred.
- Solid Red: battery is properly charged.
- Solid Green: battery is fully charged.
- OFF: battery is not charged.

2.2 Power On/Off

Power On

When the device is connected to cable or the battery is enough, press ⏻ for 2 seconds to power on the device.

Power Off

When the device is turned on, hold ⏻ for 2 seconds to power off the device.

2.3 Menu Description

When the device powers on, hold ☰ to display the menu.

Figure 2-2 Menu Description

- Press 📷 to move the cursor up.
- Press 🔍± to move the cursor down.
- Press ☰ to confirm and hold it to exit the menu.

Chapter 3 Image Settings

You can set palettes, brightness, scenes, FFC (flat field corrrection), and DPC (defective pixel correction) to display the best image effect.

3.1 Adjust Diopter

Make sure the eyepiece covers your eye and aims at the target. Adjust the diopter adjustment knob until the OSD text or image is clear.

Note

When adjusting diopter, DO NOT touch the surface of lens to avoid smearing the lens.

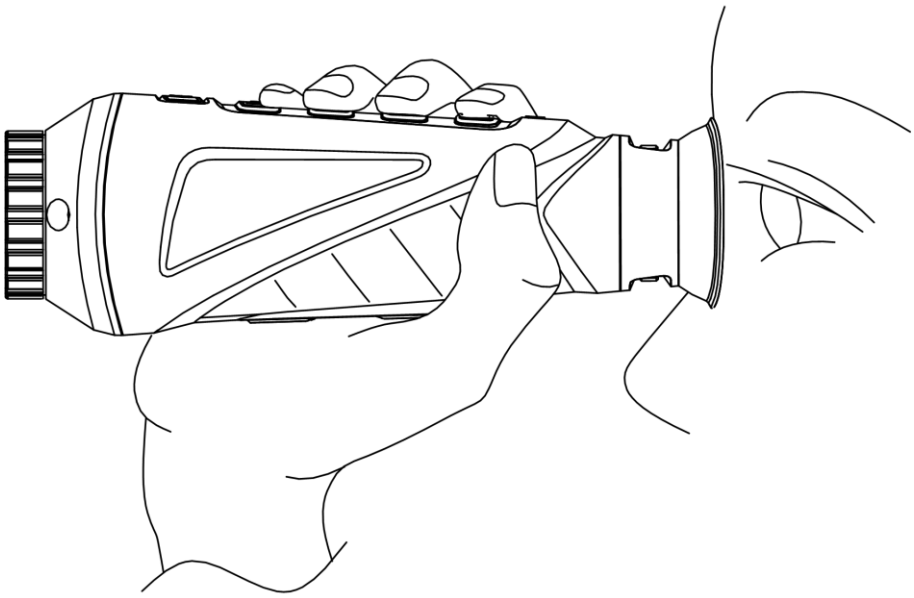

Figure 3-1 View the Target

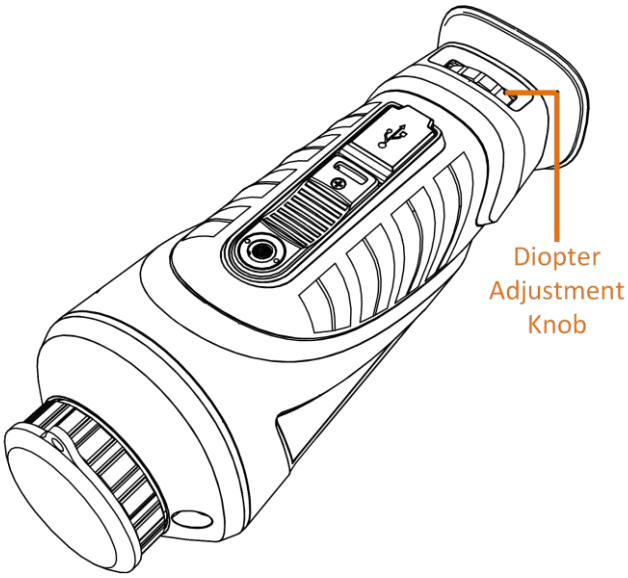

Figure 3-2 Adjust Diopter

3.2 Focus Lens

Slightly rotate the focus wheel to focus the objective lens.

Figure 3-3 Adjust Objective Lens

Note

DO NOT touch the lens directly with your finger, or place any sharp objects near them.

3.3 Adjust Brightness

In the menu mode, select and press to adjust brightness. In white hot mode, the higher the value of brightness is, the brighter the image is. The image effect in white hot mode is showed as picture below and effect in black hot mode is opposite.

Figure 3-4 Adjust Brightness in White Hot Mode

3.4 Adjust Contrast

In the menu mode, select and press to adjust image contrast.

3.5 Select Scene

You can select proper scene according to actual using scene to improve the display effect.

Steps

1. Hold to go to the menu.
2. Select and press to switch scene.
   – refers to recognition mode and is recommended in normal scene.
   – refers to jungle mode and is recommended in hunting environment.
3. Hold to save settings and exit.

3.6 Set Palettes

You can select different palettes to display the same scene in different effects. Press M to switch palettes.

White Hot

The hot part is light-colored in view. The higher the temperature is, the lighter the color is.

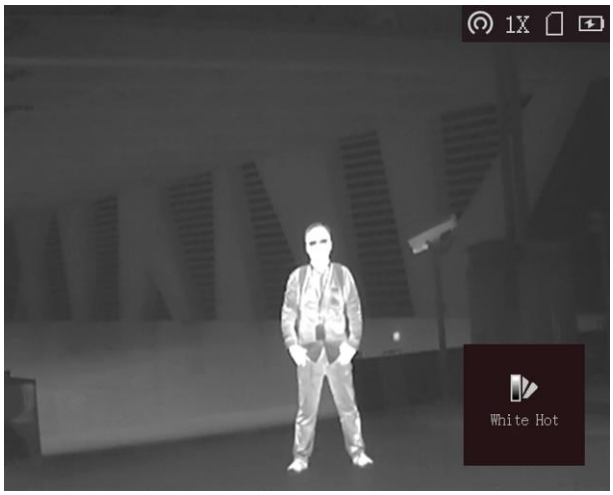

Black Hot

The hot part is black-colored in view. The higher the temperature is, the more black the color is.

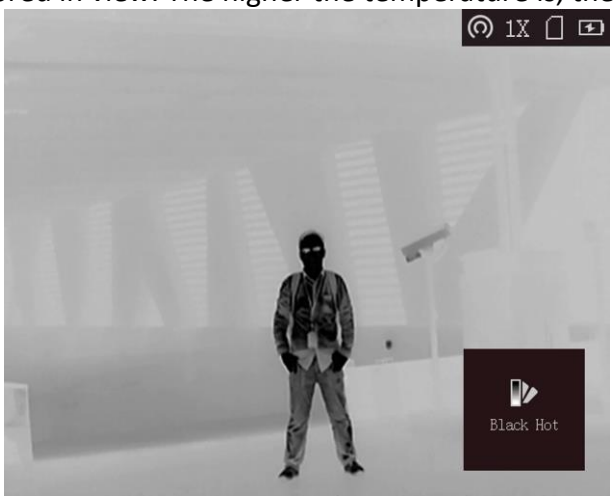

Red Hot

The hot part is red-colored in view. The higher the temperature is, the redder the color is.

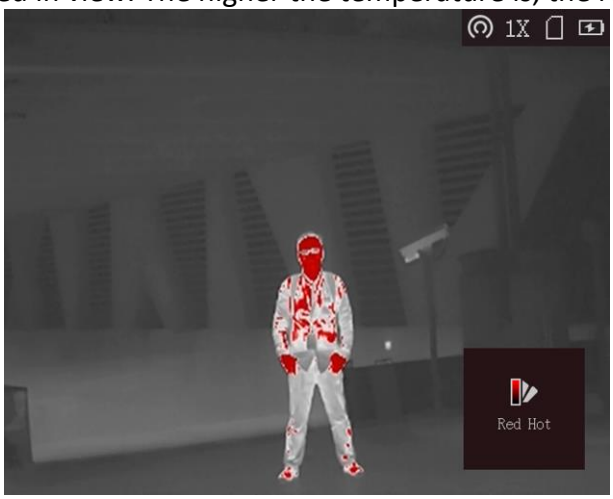

Fusion

From high temperature to low temperature, the image is colored in from white, yellow, red, pink to purple.

3.7 Adjust Digital Zoom

You can zoom the image by using this function.
Press in the view mode, the live view switches between 1 ×, 2 ×, 4 ×, and 8 ×.

Note

This function varies according to different camera models.

3.8 Flat Field Correction

This function can correct non-uniformity of display.

Steps

1. Hold to go to the menu.
2. Select and press to switch FFC mode.
   - Manual: Hold in live view to correct the non-uniformity of display.
   - Auto: The device performs FFC automatically according to the set schedule when switching on the camera.
   - External: Cover the lens cover, then hold in live view to correct the non-uniformity of display.
3. Hold to save the settings and exit.

3.9 Correct Defective Pixel

The device can correct the defective pixels on the screen which are not performed as expected.

Steps

1. Hold to show the menu.
2. Select .
3. press to select the offset. The offset refers to the moving length of cursor.
4. Press or to select the moving direction.
5. Press to move the cursor to the position of dead pixel. Hold to correct the dead pixel.

Note

If the menu blocks the dead pixel, hold to perform mirror display.

3.10 Set OSD

In the menu interface, press to display or hide the OSD information.

Chapter 4 Measure the Distance

The device can detect the distance between the target and the observation position.

Before You Start

When measuring the distance, keep the hand and the position steady. Otherwise, the accuracy may be affected.

Steps

1. Hold to show the menu.
2. Select and press to go to the setting interface.
   1) Press or to select the target from **Deer**, **Wolf**, **Bear**, and **Custom**.
   2) Set the target height.

   Note

   The available height ranges from 0.1 m to 9.9 m.

   3) Press to confirm.
3. Align the center of top mark with the edge of target top. Press .

Figure 4-1 Set the Edge of Target Top

   The cursor blinks on the top edge of the target.
4. Align the center of bottom mark with the edge of target bottom. Press .

Figure 4-2 Set the Edge of Target Bottom

Result

The left top of the image displays the distance measurement result and the height of the target.

Figure 4-3 Measurement Result

Note

Go to distance measurement interface, and press to view the result of the previous measuring target.

Chapter 5 Highest Temperature Tracking

The device can detect the highest temperature spot in the scene and mark it on display.
In the menu, select and press to mark the spot of highest temperature.
When the function is enabled, displays in the spot of highest temperature. When the scene changes, the moves.

Chapter 6 Picture and Video

You can manually record video or capture picture when displaying live view.

6.1 Capture Picture

On the main live view page, press to capture picture.

Note

● When capturing succeeds, the image freezes for 1 second and a prompt shows on the display. For exporting captured pictures, refer to ***Export Files***.

6.2 Record Video

Steps

1. In the main live view, hold and start recording.

Figure 6-1 Start Recording

The left top of image displays the information of recording time.

2. Hold again to stop recording.

What to do next

For exporting recording files, refer to ***Export Files***.

6.3 Export Files

This function is used to export recorded videos and captured pictures.

Before You Start

Turn off hot spot function.

Steps

1. Connect the device and PC with cable.

Note

Make sure the device is turned off when connecting the cable.

2. Open computer disk and select the disk of device. Go to **DICM** → **100EZVIZ**.
3. Select and copy the files to PC.
4. Disconnect the device from your PC.

Note

- The device displays images when you connect it to PC. But functions such as recording, capturing and hot spot are disabled.
- When you connect the device to PC for the first time, it installs the drive program automatically.

Chapter 7 Client Software Connection

Connect the device to the T-Vision APP via hot spot, then you can capture picture, record video, or configure parameters on your phone.

Steps

1. Hold to show the menu of device.
2. Press to enable hot spot function.
3. Turn on the WLAN of your phone and connect to the hot spot.
   - Hot Spot Name: Wlan-IPTS Serial No.
   - Hot Spot Password: the last 9 digits of serial No.
4. Scan the QR code to download and install the app.

Android System

iOS System

5. Open the APP and connect your phone with the device. You can view the interface of device on your phone.

Note

The hot spot function will be turned off automatically when power is less than 15%.

Chapter 8 CVBS Output

You can view the image on the display unit for details with this function.

Before You Start

Purchase the CVBS cable from the manufacturer separately or prepare it by yourself.
Connect the device and the display unit via USB to CVBS cable.
Make sure the device is turned off when connecting the cable.

Steps

1. Hold to show the menu of device.
2. Select **CVBS**, and press to turn on CVBS output.
   The display unit show the device image.

Chapter 9 Maintenance

This part introduces the operation of checking device information, upgrading device, and restoring to defaults, etc.

9.1 View Device Information

Steps

1. Hold to show the menu of device.
2. Select , and press . You can view the device information such as version, and serial No.

9.2 Upgrade Device

Before You Start

Please get the upgrade package first.

Steps

1. Connect the device to your PC with cable.
2. Open the detected disk, copy the upgrade file and paste it to the root directory of the device.
3. Disconnect the device from your PC.
4. Reboot the device.

Result

The device upgrades automatically. The upgrading process will be displayed in the main interface.

9.3 Restore Device

Steps

1. Hold to show the menu of device.
2. Select , and press to restore the device to defaults according to the prompt.

Chapter 10 Frequently Asked Questions

10.1 Why is the monitor off?

Check whether the device is off-battery. Check the monitor after charging the device for 5 minutes.

10.2 What should I do if I forget the login password?

Reset the password after initializing the device.

10.3 The image is not clear, how to adjust it?

Adjust the diopter adjustment knob until the image is clear. Refer to section .

10.4 Capturing or recording fails. What's the problem?

Check the following items.
- Whether the device is connected to your PC. Capturing or recording is disabled in this status.
- Whether the storage space is full.
- Whether the device is low-battery.

10.5 Why the PC cannot identify the device?

Check the following items.
- Whether the device is connected to your PC with supplied USB cable.
- If you use other USB cables, make sure the cable length is no longer than 1 m.
- Whether the hot spot function is turned on. If so, go to device menu and turn off hot spot.