DFS TEST REPORT

Application No.:	KSCR2203000413AT
FCC ID:	2AXVM-TP4X-3XXX
IC:	26572-HMTP4X
Applicant:	Hangzhou Microimage Software Co., Ltd.
Address of Applicant:	Room 313, Unit B, Building 2, 399 Danfeng Road, Xixing Subdistrict, Binjiang District, Hangzhou, Zhejiang
Manufacturer:	Hangzhou Microimage Software Co., Ltd.
Address of Manufacturer:	Room 313, Unit B, Building 2, 399 Danfeng Road, Xixing Subdistrict, Binjiang District, Hangzhou, Zhejiang
Factory:	Hangzhou Microimage Intelligent Technology Co., Ltd.
Address of Factory:	Floor 2, Building A1, 299 Qiushi Road, Tonglu Economic Development Zone, Tonglu County, Hangzhou City, Zhejiang Province
Equipment Under Test (EUT):	
EUT Name:	Pocket Thermography Camera
Model No.:	HM-TP42-3AQF/W-Pocket2,HM-TP41-3AQF-Pocket1, HM-TP41-3AQF/W-Pocket1¤
¤	Please refer to section 2 of this report which indicates which model was actually tested and which were electrically identical.
Trade Mark:	HIKMICRO
Standard(s) :	47 CFR Part 15, Subpart E 15.407 RSS-247 Issue 2, February 2017 KDB 905462 D02 UNII DFS Compliance Procedures New Rules v02 KDB 905462 D03 UNII Clients Without Radar Detection New Rules v01r02 KDB 905462 D04 Operational Modes for DFS Testing New Rules v01
Date of Receipt:	2022-03-30
Date of Test:	2022-04-14 to 2022-04-14
Date of Issue:	2022-05-12
Test Result:	**Pass***

* In the configuration tested, the EUT complied with the standards specified above.

Eric Lin
Laboratory Manager

Unless otherwise agreed in writing, this document is issued by the Company subject to its General Conditions of Service printed overleaf, available on request or accessible at http://www.sgs.com/en/Terms-and-Conditions.aspx and, for electronic format documents, subject to Terms and Conditions for Electronic Documents at http://www.sgs.com/en/Terms-and-Conditions/Terms-e-Document.aspx. Attention is drawn to the limitation of liability, indemnification and jurisdiction issues defined therein. Any holder of this document is advised that information contained hereon reflects the Company's findings at the time of its intervention only and within the limits of Client's instructions, if any. The Company's sole responsibility is to its Client and this document does not exonerate parties to a transaction from exercising all their rights and obligations under the transaction documents. This document cannot be reproduced except in full, without prior written approval of the Company. Any unauthorized alteration, forgery or falsification of the content or appearance of this document is unlawful and offenders may be prosecuted to the fullest extent of the law. Unless otherwise stated the results shown in this test report refer only to the sample(s) tested and such sample(s) are retained for 30 days only.
Attention: To check the authenticity of testing /inspection report & certificate, please contact us at telephone: (86-755) 8307 1443, or email: CN.Doccheck@sgs.com

No.10, Weiye Road, Innovation Park, Kunshan, Jiangsu, China 215300 t(86-512)57355888 f(86-512)57370818 www.sgsgroup.com.cn
中国・江苏・昆山市留学生创业园伟业路10号 邮编 215300 t(86-512)57355888 f(86-512)57370818 sgs.china@sgs.com

Revision Record				
Version	**Chapter**	**Date**	**Modifier**	**Remark**
01		2022-05-12		Original

Authorized for issue by:				
		Tommie Tang		
		Tommie Tang/Project Engineer		
		Eric Lin		
		Eric Lin/Reviewer		

Unless otherwise agreed in writing, this document is issued by the Company subject to its General Conditions of Service printed overleaf, available on request or accessible at http://www.sgs.com/en/Terms-and-Conditions.aspx and, for electronic format documents, subject to Terms and Conditions for Electronic Documents at http://www.sgs.com/en/Terms-and-Conditions/Terms-e-Document.aspx. Attention is drawn to the limitation of liability, indemnification and jurisdiction issues defined therein. Any holder of this document is advised that information contained hereon reflects the Company's findings at the time of its intervention only and within the limits of Client's instructions, if any. The Company's sole responsibility is to its Client and this document does not exonerate parties to a transaction from exercising all their rights and obligations under the transaction documents. This document cannot be reproduced except in full, without prior written approval of the Company. Any unauthorized alteration, forgery or falsification of the content or appearance of this document is unlawful and offenders may be prosecuted to the fullest extent of the law. Unless otherwise stated the results shown in this test report refer only to the sample(s) tested and such sample(s) are retained for 30 days only.
Attention: To check the authenticity of testing /inspection report & certificate, please contact us at telephone: (86-755) 8307 1443, or email: CN.Doccheck@sgs.com

No.10, Weiye Road, Innovation Park, Kunshan, Jiangsu, China 215300 t(86-512)57355888 f(86-512)57370818 www.sgsgroup.com.cn
中国・江苏・昆山市留学生创业园伟业路10号 邮编 215300 t(86-512)57355888 f(86-512)57370818 sgs.china@sgs.com

2 Test Summary

Item	Standard	Method	Requirement	Result
Channel Move Time	47 CFR Part 15, Subpart E 15.407	KDB 905462 D02 Section 7.8.3	KDB 905462 D02 Section 5.1	Pass
Channel Closing Transmission Time	47 CFR Part 15, Subpart E 15.407	KDB 905462 D02 Section 7.8.3	KDB 905462 D02 Section 5.1	Pass
Non-occupancy period	47 CFR Part 15, Subpart E 15.407	KDB 905462 D02 Section 7.8.3	KDB 905462 D02 Section 5.1	Pass

Declaration of EUT Family Grouping:

Note: There are series models mentioned in this report, and they are the identical in electrical and electronic characters. Only the model HM-TP42-3AQF/W-Pocket2 was tested since their differences were the model number and silk.

Unless otherwise agreed in writing, this document is issued by the Company subject to its General Conditions of Service printed overleaf, available on request or accessible at http://www.sgs.com/en/Terms-and-Conditions.aspx and, for electronic format documents, subject to Terms and Conditions for Electronic Documents at http://www.sgs.com/en/Terms-and-Conditions/Terms-e-Document.aspx. Attention is drawn to the limitation of liability, indemnification and jurisdiction issues defined therein. Any holder of this document is advised that information contained hereon reflects the Company's findings at the time of its intervention only and within the limits of Client's instructions, if any. The Company's sole responsibility is to its Client and this document does not exonerate parties to a transaction from exercising all their rights and obligations under the transaction documents. This document cannot be reproduced except in full, without prior written approval of the Company. Any unauthorized alteration, forgery or falsification of the content or appearance of this document is unlawful and offenders may be prosecuted to the fullest extent of the law. Unless otherwise stated the results shown in this test report refer only to the sample(s) tested and such sample(s) are retained for 30 days only.
Attention: To check the authenticity of testing /inspection report & certificate, please contact us at telephone: (86-755) 8307 1443, or email: CN.Doccheck@sgs.com

No.10, Weiye Road, Innovation Park, Kunshan, Jiangsu, China 215300 t(86-512)57355888 f(86-512)57370818 www.sgsgroup.com.cn
中国・江苏・昆山市留学生创业园伟业路10号 邮编 215300 t(86-512)57355888 f(86-512)57370818 sgs.china@sgs.com

3 Contents

Page

1 COVER PAGE 1

2 TEST SUMMARY 3

3 CONTENTS 4

4 GENERAL INFORMATION 5

4.1 DETAILS OF E.U.T 5
4.2 DESCRIPTION OF SUPPORT UNITS 7
4.3 TEST LOCATION 8
4.4 TEST FACILITY 8
4.5 DEVIATION FROM STANDARDS 8
4.6 ABNORMALITIES FROM STANDARD CONDITIONS 8

5 EQUIPMENT LIST 9

6 DYNAMIC FREQUENCY SELECTION 10

6.1 APPLICABILITY OF DFS REQUIREMENTS 10
6.2 DFS DETECTION THRESHOLDS 11
6.3 DFS RESPONSE REQUIREMENTS 11
6.4 PARAMETERS OF RADAR TEST WAVEFORMS 12
6.4.1 Short Pulse Radar Test Waveforms 12
6.4.2 Long Pulse Radar Test Waveform 14
6.4.3 Frequency Hopping Radar Test Waveform 16
6.5 CALIBRATION OF RADAR WAVEFORM 17
6.5.1 Radar Waveform Calibration Procedure 17
6.5.2 Conducted Calibration Setup 17
6.6 TEST PROCEDURE 18
6.7 TEST SETUP 19
6.8 CHANNEL LOADING 19
6.9 TEST RESULT 20
6.9.1 Radar Waveform Calibration Result 20
6.9.2 Channel Loading 21
6.9.3 Channel Shutdown 22
6.9.4 Non-occupancy period 23

7 23

Unless otherwise agreed in writing, this document is issued by the Company subject to its General Conditions of Service printed overleaf, available on request or accessible at http://www.sgs.com/en/Terms-and-Conditions.aspx and, for electronic format documents, subject to Terms and Conditions for Electronic Documents at http://www.sgs.com/en/Terms-and-Conditions/Terms-e-Document.aspx. Attention is drawn to the limitation of liability, indemnification and jurisdiction issues defined therein. Any holder of this document is advised that information contained hereon reflects the Company's findings at the time of its intervention only and within the limits of Client's instructions, if any. The Company's sole responsibility is to its Client and this document does not exonerate parties to a transaction from exercising all their rights and obligations under the transaction documents. This document cannot be reproduced except in full, without prior written approval of the Company. Any unauthorized alteration, forgery or falsification of the content or appearance of this document is unlawful and offenders may be prosecuted to the fullest extent of the law. Unless otherwise stated the results shown in this test report refer only to the sample(s) tested and such sample(s) are retained for 30 days only.
Attention: To check the authenticity of testing /inspection report & certificate, please contact us at telephone: (86-755) 8307 1443, or email: CN.Doccheck@sgs.com

No.10, Weiye Road, Innovation Park, Kunshan, Jiangsu, China 215300 t(86-512)57355888 f(86-512)57370818 www.sgsgroup.com.cn
中国・江苏・昆山市留学生创业园伟业路10号 邮编 215300 t(86-512)57355888 f(86-512)57370818 sgs.china@sgs.com

4 General Information

4.1 Details of E.U.T.

Power supply: DC 3.85V by rechargeable Li-on polymer battery or DC 5V,2A by adapter
Battery Model: HM-3821DC
Rated Voltage: 3.85V
Rated Capacity: 2100mAh/8.085Wh
Nominal Capacity: 2150mAh/8.2775Wh
Limited Charge Voltage: 4.4V

Test voltage: AC 120V/60Hz

Antenna Gain: 5150-5250MHz: -0.4dBi (Provided by manufacturer)
5250-5350MHz: 1.55dBi (Provided by manufacturer)
5470-5725MHz: 2.54dBi (Provided by manufacturer)
5725-5850MHz: 1.92dBi (Provided by manufacturer)

Antenna Type: FPC antenna

TPC Function: Slave without Radar detection

S/N: J26470855

Firmware Version: V5.5.24_220301

Operation Frequency:	Band	Mode	Frequency Range(MHz)	Number of channels
	UNII Band I	802.11a/n(HT20)/ac(VHT20)	5180-5240	4
		802.11n(HT40)/ac(VHT40)	5190-5230	2
		802.11ac(VHT80)	5210	1
	UNII Band II-A	802.11a/n(HT20)/ac(VHT20)	5260-5320	4
		802.11n(HT40)/ac(VHT40)	5270-5310	2
		802.11ac(VHT80)	5290	1
	UNII Band II-C	802.11a/n(HT20)/ac(VHT20)	5500-5700	11
		802.11n(HT40)/ac(VHT40)	5510-5670	5
		802.11ac(VHT80)	5530~5610	2
	UNII Band III	802.11a/n(HT20)/ac(VHT20)	5745-5825	5
		802.11n(HT40)/ac(VHT40)	5755-5795	2
		802.11ac(VHT80)	5775	1
Modulation Type:	802.11a: OFDM (64QAM, 16QAM, QPSK, BPSK) 802.11n: OFDM (BPSK, QPSK, 16QAM, 64QAM) 802.11ac: OFDM (BPSK, QPSK, 16QAM, 64QAM, 256QAM)			
Channel Spacing:	802.11a/n(HT20)/ac(VHT20): 20MHz 802.11n(HT40)/ac(VHT40): 40MHz 802.11ac(VHT80): 80MHz			

Unless otherwise agreed in writing, this document is issued by the Company subject to its General Conditions of Service printed overleaf, available on request or accessible at http://www.sgs.com/en/Terms-and-Conditions.aspx and, for electronic format documents, subject to Terms and Conditions for Electronic Documents at http://www.sgs.com/en/Terms-and-Conditions/Terms-e-Document.aspx. Attention is drawn to the limitation of liability, indemnification and jurisdiction issues defined therein. Any holder of this document is advised that information contained hereon reflects the Company's findings at the time of its intervention only and within the limits of Client's instructions, if any. The Company's sole responsibility is to its Client and this document does not exonerate parties to a transaction from exercising all their rights and obligations under the transaction documents. This document cannot be reproduced except in full, without prior written approval of the Company. Any unauthorized alteration, forgery or falsification of the content or appearance of this document is unlawful and offenders may be prosecuted to the fullest extent of the law. Unless otherwise stated the results shown in this test report refer only to the sample(s) tested and such sample(s) are retained for 30 days only.
Attention: To check the authenticity of testing /inspection report & certificate, please contact us at telephone: (86-755) 8307 1443, or email: CN.Doccheck@sgs.com

No.10, Weiye Road, Innovation Park, Kunshan, Jiangsu, China 215300 t(86-512)57355888 f(86-512)57370818 www.sgsgroup.com.cn
中国・江苏・昆山市留学生创业园伟业路10号 邮编 215300 t(86-512)57355888 f(86-512)57370818 sgs.china@sgs.com

Data Rate:	802.11a: 6/9/12/18/24/36/48/54Mbps 802.11n: MCS0-7 802.11ac: MCS0-9

Remark: For frequencies falling between 5600-5650MHz will not be used in Canada.

Unless otherwise agreed in writing, this document is issued by the Company subject to its General Conditions of Service printed overleaf, available on request or accessible at http://www.sgs.com/en/Terms-and-Conditions.aspx and, for electronic format documents, subject to Terms and Conditions for Electronic Documents at http://www.sgs.com/en/Terms-and-Conditions/Terms-e-Document.aspx. Attention is drawn to the limitation of liability, indemnification and jurisdiction issues defined therein. Any holder of this document is advised that information contained hereon reflects the Company's findings at the time of its intervention only and within the limits of Client's instructions, if any. The Company's sole responsibility is to its Client and this document does not exonerate parties to a transaction from exercising all their rights and obligations under the transaction documents. This document cannot be reproduced except in full, without prior written approval of the Company. Any unauthorized alteration, forgery or falsification of the content or appearance of this document is unlawful and offenders may be prosecuted to the fullest extent of the law. Unless otherwise stated the results shown in this test report refer only to the sample(s) tested and such sample(s) are retained for 30 days only.
Attention: To check the authenticity of testing /inspection report & certificate, please contact us at telephone: (86-755) 8307 1443, or email: CN.Doccheck@sgs.com

No.10, Weiye Road, Innovation Park, Kunshan, Jiangsu, China 215300 t(86-512)57355888 f(86-512)57370818 www.sgsgroup.com.cn
中国・江苏・昆山市留学生创业园伟业路10号 邮编 215300 t(86-512)57355888 f(86-512)57370818 sgs.china@sgs.com

4.2 Description of Support Units

Description	Manufacturer	Model No.	Serial No.
NIGHTHAWK AX6 AX5400 6-Stream WiFi Router	NETGEAR	RAX50	/
Notebook	LENOVO	Thinkpad T420	/
Notebook	Acer	ZQT	NXM0QCN01031403EE876

Unless otherwise agreed in writing, this document is issued by the Company subject to its General Conditions of Service printed overleaf, available on request or accessible at http://www.sgs.com/en/Terms-and-Conditions.aspx and, for electronic format documents, subject to Terms and Conditions for Electronic Documents at http://www.sgs.com/en/Terms-and-Conditions/Terms-e-Document.aspx. Attention is drawn to the limitation of liability, indemnification and jurisdiction issues defined therein. Any holder of this document is advised that information contained hereon reflects the Company's findings at the time of its intervention only and within the limits of Client's instructions, if any. The Company's sole responsibility is to its Client and this document does not exonerate parties to a transaction from exercising all their rights and obligations under the transaction documents. This document cannot be reproduced except in full, without prior written approval of the Company. Any unauthorized alteration, forgery or falsification of the content or appearance of this document is unlawful and offenders may be prosecuted to the fullest extent of the law. Unless otherwise stated the results shown in this test report refer only to the sample(s) tested and such sample(s) are retained for 30 days only.
Attention: To check the authenticity of testing /inspection report & certificate, please contact us at telephone: (86-755) 8307 1443, or email: CN.Doccheck@sgs.com

No.10, Weiye Road, Innovation Park, Kunshan, Jiangsu, China 215300 t(86-512)57355888 f(86-512)57370818 www.sgsgroup.com.cn
中国・江苏・昆山市留学生创业园伟业路10号 邮编 215300 t(86-512)57355888 f(86-512)57370818 sgs.china@sgs.com

4.3 Test Location

All tests were performed at:

Compliance Certification Services (Kunshan) Inc.

No.10 Weiye Rd, Innovation park, Eco&Tec, Development Zone, Kunshan City, Jiangsu, China.

Tel: +86 512 5735 5888 Fax: +86 512 5737 0818

No tests were sub-contracted.

4.4 Test Facility

The test facility is recognized, certified, or accredited by the following organizations:

• CNAS (No. CNAS L4354)

CNAS has accredited Compliance Certification Services (Kunshan) Inc. to ISO/IEC 17025:2017 General Requirements for the Competence of Testing and Calibration Laboratories (CNAS-CL01 Accreditation Criteria for the Competence of Testing and Calibration Laboratories) for the competence in the field of testing.

• A2LA (Certificate No. 2541.01)

Compliance Certification Services (Kunshan) Inc. is accredited by the American Association for Laboratory Accreditation (A2LA). Certificate No. 2541.01.

• FCC (Designation Number: CN1172)

Compliance Certification Services (Kunshan) Inc. has been recognized as an accredited testing laboratory.

Designation Number: CN1172.

• ISED (CAB identifier: CN0072)

Compliance Certification Services (Kunshan) Inc. has been recognized by Innovation, Science and Economic Development Canada (ISED) as an accredited testing laboratory.

Company Number: 2324E

• VCCI (Member No.: 1938)

The 3m and 10m Semi-anechoic chamber and Shielded Room of Compliance Certification Services (Kunshan) Inc. has been registered in accordance with the Regulations for Voluntary Control Measures with Registration No.: R-20134, R-11600, C-11707, T-11499, G-10216 respectively.

4.5 Deviation from Standards

None

4.6 Abnormalities from Standard Conditions

None

Unless otherwise agreed in writing, this document is issued by the Company subject to its General Conditions of Service printed overleaf, available on request or accessible at http://www.sgs.com/en/Terms-and-Conditions.aspx and, for electronic format documents, subject to Terms and Conditions for Electronic Documents at http://www.sgs.com/en/Terms-and-Conditions/Terms-e-Document.aspx. Attention is drawn to the limitation of liability, indemnification and jurisdiction issues defined therein. Any holder of this document is advised that information contained hereon reflects the Company's findings at the time of its intervention only and within the limits of Client's instructions, if any. The Company's sole responsibility is to its Client and this document does not exonerate parties to a transaction from exercising all their rights and obligations under the transaction documents. This document cannot be reproduced except in full, without prior written approval of the Company. Any unauthorized alteration, forgery or falsification of the content or appearance of this document is unlawful and offenders may be prosecuted to the fullest extent of the law. Unless otherwise stated the results shown in this test report refer only to the sample(s) tested and such sample(s) are retained for 30 days only.
Attention: To check the authenticity of testing /inspection report & certificate, please contact us at telephone: (86-755) 8307 1443, or email: CN.Doccheck@sgs.com

No.10, Weiye Road, Innovation Park, Kunshan, Jiangsu, China 215300 t(86-512)57355888 f(86-512)57370818 www.sgsgroup.com.cn
中国・江苏・昆山市留学生创业园伟业路10号 邮编 215300 t(86-512)57355888 f(86-512)57370818 sgs.china@sgs.com

5 Equipment List

Item	Equipment	Manufacturer	Model	Serial Number	Cal Date	Cal. Due Date
RF Conducted Test						
1	Spectrum Analyzer	Agilent	E4446A	MY44020154	04/16/2021	04/15/2022
2	Spectrum Analyzer	Keysight	N9020A	MY55370209	10/11/2021	10/10/2022
4	Signal Generator	Agilent	N5182A	MY50142015	08/27/2021	08/26/2022
5	Spectrum Analyzer	Keysight	N9030B	MY61330164	01/22/2022	01/21/2023
6	Vector Signal Generator	R&S	SMW200A	110074	10/12/2021	10/11/2022
7	Radio Communication Test Station	Anritsu	MT8000A	6262012849	09/23/2021	09/22/2022
8	Radio Communication Analyzer	Anritsu	MT8821C	6201692222	09/23/2021	09/22/2022
9	Universal Radio Communication Tester	R&S	CMW500	159275	10/12/2021	10/11/2022
10	Universal Radio Communication Tester	R&S	CMW500	167239	04/16/2021	04/15/2022
11	Power Meter	Anritsu	ML2495A	1445010	04/15/2021	04/14/2022
12	Switcher	CCSRF	FY562	KUS2001M001-3	10/12/2021	10/11/2022
13	AC Power Source	EXTECH	6605	1570106	N.C.R	N.C.R
14	DC Power Supply	Aglient	E3632A	MY50340053	N.C.R	N.C.R
15	6dB Attenuator	Mini-Circuits	NAT-6-2W	15542-1	N.C.R	N.C.R
16	Power Divider	AISI	IOWOPE2068	PE2068	N.C.R	N.C.R
17	Filter	MICRO-TRONICS	BRM50701	5	N.C.R	N.C.R
18	Conducted Test Cable	/	RF01-RF04	/	04/15/2021	04/14/2022
19	Software	BST	TST-PASS	N/A	N/A	N/A
20	Temp. / Humidity Chamber	TERCHY	MHK-120AK	X30109	04/15/2021	04/14/2022
21	Thermometer	Anymetre	TH603	CCS007	10/14/2021	10/13/2022

Unless otherwise agreed in writing, this document is issued by the Company subject to its General Conditions of Service printed overleaf, available on request or accessible at http://www.sgs.com/en/Terms-and-Conditions.aspx and, for electronic format documents, subject to Terms and Conditions for Electronic Documents at http://www.sgs.com/en/Terms-and-Conditions/Terms-e-Document.aspx. Attention is drawn to the limitation of liability, indemnification and jurisdiction issues defined therein. Any holder of this document is advised that information contained hereon reflects the Company's findings at the time of its intervention only and within the limits of Client's instructions, if any. The Company's sole responsibility is to its Client and this document does not exonerate parties to a transaction from exercising all their rights and obligations under the transaction documents. This document cannot be reproduced except in full, without prior written approval of the Company. Any unauthorized alteration, forgery or falsification of the content or appearance of this document is unlawful and offenders may be prosecuted to the fullest extent of the law. Unless otherwise stated the results shown in this test report refer only to the sample(s) tested and such sample(s) are retained for 30 days only.
Attention: To check the authenticity of testing /inspection report & certificate, please contact us at telephone: (86-755) 8307 1443, or email: CN.Doccheck@sgs.com

No.10, Weiye Road, Innovation Park, Kunshan, Jiangsu, China 215300 t(86-512)57355888 f(86-512)57370818 www.sgsgroup.com.cn
中国・江苏・昆山市留学生创业园伟业路10号 邮编 215300 t(86-512)57355888 f(86-512)57370818 sgs.china@sgs.com

6 Dynamic Frequency Selection

6.1 Applicability of DFS requirements

Table 1: Applicability of DFS Requirements Prior to Use of a Channel

Requirement	Operational Mode		
	☐Master	☒Client Without Radar Detection	☐Client with Radar Detection
Non-Occupancy Period	Yes	Not required	Yes
DFS Detection Threshold	Yes	Not required	Yes
Channel Availability Check Time	Yes	Not required	Not required
U-NII Detection Bandwidth	Yes	Not required	Yes

Table 2: Applicability of DFS requirements during normal operation

Requirement	Operational Mode	
	☐Master Device or Client with Radar Detection	☒Client Without Radar Detection
DFS Detection Threshold	Yes	Not required
Channel Closing Transmission Time	Yes	Yes
Channel Move Time	Yes	Yes
U-NII Detection Bandwidth	Yes	Not required

Additional requirements for devices with multiple bandwidth modes	☐Master Device or Client with Radar Detection	☒Client Without Radar Detection
U-NII Detection Bandwidth and Statistical Performance Check	All BW modes must be tested	Not required
Channel Move Time and Channel Closing Transmission Time	Test using widest BW mode available	Test using the widest BW mode available for the link
All other tests	Any single BW mode	Not required
Note: Frequencies selected for statistical performance check (Section 7.8.4) should include several frequencies within the radar detection bandwidth and frequencies near the edge of the radar detection bandwidth. For 802.11 devices, it is suggested to select frequencies in each of the bonded 20 MHz channels and the channel center frequency.		

Unless otherwise agreed in writing, this document is issued by the Company subject to its General Conditions of Service printed overleaf, available on request or accessible at http://www.sgs.com/en/Terms-and-Conditions.aspx and, for electronic format documents, subject to Terms and Conditions for Electronic Documents at http://www.sgs.com/en/Terms-and-Conditions/Terms-e-Document.aspx. Attention is drawn to the limitation of liability, indemnification and jurisdiction issues defined therein. Any holder of this document is advised that information contained hereon reflects the Company's findings at the time of its intervention only and within the limits of Client's instructions, if any. The Company's sole responsibility is to its Client and this document does not exonerate parties to a transaction from exercising all their rights and obligations under the transaction documents. This document cannot be reproduced except in full, without prior written approval of the Company. Any unauthorized alteration, forgery or falsification of the content or appearance of this document is unlawful and offenders may be prosecuted to the fullest extent of the law. Unless otherwise stated the results shown in this test report refer only to the sample(s) tested and such sample(s) are retained for 30 days only.
Attention: To check the authenticity of testing /inspection report & certificate, please contact us at telephone: (86-755) 8307 1443, or email: CN.Doccheck@sgs.com

No.10, Weiye Road, Innovation Park, Kunshan, Jiangsu, China 215300 t(86-512)57355888 f(86-512)57370818 www.sgsgroup.com.cn
中国・江苏・昆山市留学生创业园伟业路10号 邮编 215300 t(86-512)57355888 f(86-512)57370818 sgs.china@sgs.com

6.2 DFS Detection Thresholds

Table 3: DFS Detection Thresholds for Master Devices and Client Devices With Radar Detection

Maximum Transmit Power	Value (See Notes 1, 2, and 3)
EIRP ≥ 200 milliwatt	-64 dBm
EIRP < 200 milliwatt and power spectral density < 10 dBm/MHz	-62 dBm
EIRP < 200 milliwatt that do not meet the power spectral density requirement	-64 dBm

Note 1: This is the level at the input of the receiver assuming a 0 dBi receive antenna.

Note 2: Throughout these test procedures an additional 1 dB has been added to the amplitude of the test transmission waveforms to account for variations in measurement equipment. This will ensure that the test signal is at or above the detection threshold level to trigger a DFS response.

Note3: EIRP is based on the highest antenna gain. For MIMO devices refer to KDB Publication 662911 D01.

6.3 DFS Response Requirements

Table 4: DFS Response Requirement Values

Parameter	Value
Non-occupancy period	Minimum 30 minutes
Channel Availability Check Time	60 seconds
Channel Move Time	10 seconds See Note 1.
Channel Closing Transmission Time	200 milliseconds + an aggregate of 60 milliseconds over remaining 10 second period. See Notes 1 and 2.
U-NII Detection Bandwidth	Minimum 100% of the U-NII 99% transmission power bandwidth. See Note 3.

Note 1: *Channel Move Time* and the *Channel Closing Transmission Time* should be performed with Radar Type 0. The measurement timing begins at the end of the Radar Type 0 burst.

Note 2: The *Channel Closing Transmission Time* is comprised of 200 milliseconds starting at the beginning of the *Channel Move Time* plus any additional intermittent control signals required facilitating a *Channel* move (an aggregate of 60 milliseconds) during the remainder of the 10 second period. The aggregate duration of control signals will not count quiet periods in between transmissions.

Note 3: During the *U-NII Detection Bandwidth* detection test, radar type 0 should be used. For each frequency step the minimum percentage of detection is 90 percent. Measurements are performed with no data traffic.

Unless otherwise agreed in writing, this document is issued by the Company subject to its General Conditions of Service printed overleaf, available on request or accessible at http://www.sgs.com/en/Terms-and-Conditions.aspx and, for electronic format documents, subject to Terms and Conditions for Electronic Documents at http://www.sgs.com/en/Terms-and-Conditions/Terms-e-Document.aspx. Attention is drawn to the limitation of liability, indemnification and jurisdiction issues defined therein. Any holder of this document is advised that information contained hereon reflects the Company's findings at the time of its intervention only and within the limits of Client's instructions, if any. The Company's sole responsibility is to its Client and this document does not exonerate parties to a transaction from exercising all their rights and obligations under the transaction documents. This document cannot be reproduced except in full, without prior written approval of the Company. Any unauthorized alteration, forgery or falsification of the content or appearance of this document is unlawful and offenders may be prosecuted to the fullest extent of the law. Unless otherwise stated the results shown in this test report refer only to the sample(s) tested and such sample(s) are retained for 30 days only.
Attention: To check the authenticity of testing /inspection report & certificate, please contact us at telephone: (86-755) 8307 1443, or email: CN.Doccheck@sgs.com

No.10, Weiye Road, Innovation Park, Kunshan, Jiangsu, China 215300 t(86-512)57355888 f(86-512)57370818 www.sgsgroup.com.cn
中国・江苏・昆山市留学生创业园伟业路10号 邮编 215300 t(86-512)57355888 f(86-512)57370818 sgs.china@sgs.com

6.4 Parameters of radar test Waveforms

This section provides the parameters for required test waveforms, minimum percentage of successful detections, and the minimum number of trials that must be used for determining DFS conformance. Step intervals of 0.1 microsecond for Pulse Width, 1 microsecond for PRI, 1 MHz for chirp width and 1 for the number of pulses will be utilized for the random determination of specific test waveforms.

6.4.1 Short Pulse Radar Test Waveforms

Table 5 Short Pulse Radar Test Waveforms

Radar Type	Pulse Width (μsec)	PRI (μsec)	Number of Pulses	Minimum Percentage of Successful Detection	Minimum Number of Trials
0	1	1428	18	See Note 1	See Note 1
1	1	Test A	$\text{Roundup}\left\{\left(\frac{1}{360}\right)\cdot\left(\frac{19\cdot 10^6}{\text{PRI}_{\mu sec}}\right)\right\}$	60%	30
		Test B			
2	1-5	150-230	23-29	60%	30
3	6-10	200-500	16-18	60%	30
4	11-20	200-500	12-16	60%	30
Aggregate (Radar Types 1-4)				80%	120

Note 1: Short Pulse Radar Type 0 should be used for the detection bandwidth test, channel move time, and channel closing time tests.

Test A: 15 unique PRI values randomly selected from the list of 23 PRI values in Table 5a

Test B: 15 unique PRI values randomly selected within the range of 518-3066 μsec, with a minimum increment of 1 μsec, excluding PRI values selected in Test A

A minimum of 30 unique waveforms are required for each of the Short Pulse Radar Types 2 through 4. If more than 30 waveforms are used for Short Pulse Radar Types 2 through 4, then each additional waveform must also be unique and not repeated from the previous waveforms. If more than 30 waveforms are used for Short Pulse Radar Type 1, then each additional waveform is generated with Test B and must also be unique and not repeated from the previous waveforms in Tests A or B.

Test aggregate is average of the percentage of successful detections of short pulse radar types 1-4

Unless otherwise agreed in writing, this document is issued by the Company subject to its General Conditions of Service printed overleaf, available on request or accessible at http://www.sgs.com/en/Terms-and-Conditions.aspx and, for electronic format documents, subject to Terms and Conditions for Electronic Documents at http://www.sgs.com/en/Terms-and-Conditions/Terms-e-Document.aspx. Attention is drawn to the limitation of liability, indemnification and jurisdiction issues defined therein. Any holder of this document is advised that information contained hereon reflects the Company's findings at the time of its intervention only and within the limits of Client's instructions, if any. The Company's sole responsibility is to its Client and this document does not exonerate parties to a transaction from exercising all their rights and obligations under the transaction documents. This document cannot be reproduced except in full, without prior written approval of the Company. Any unauthorized alteration, forgery or falsification of the content or appearance of this document is unlawful and offenders may be prosecuted to the fullest extent of the law. Unless otherwise stated the results shown in this test report refer only to the sample(s) tested and such sample(s) are retained for 30 days only.
Attention: To check the authenticity of testing /inspection report & certificate, please contact us at telephone: (86-755) 8307 1443, or email: CN.Doccheck@sgs.com

No.10, Weiye Road, Innovation Park, Kunshan, Jiangsu, China 215300 t(86-512)57355888 f(86-512)57370818 www.sgsgroup.com.cn
中国・江苏・昆山市留学生创业园伟业路10号 邮编 215300 t(86-512)57355888 f(86-512)57370818 sgs.china@sgs.com

Table 5a - Pulse Repetition Intervals Values for Test A

Pulse Repetition Frequency Number	Pulse Repetition Frequency (Pulses Per Second)	Pulse Repetition Interval (Microseconds)
1	1930.5	518
2	1858.7	538
3	1792.1	558
4	1730.1	578
5	1672.2	598
6	1618.1	618
7	1567.4	638
8	1519.8	658
9	1474.9	678
10	1432.7	698
11	1392.8	718
12	1355	738
13	1319.3	758
14	1285.3	778
15	1253.1	798
16	1222.5	818
17	1193.3	838
18	1165.6	858
19	1139	878
20	1113.6	898
21	1089.3	918
22	1066.1	938
23	326.2	3066

Unless otherwise agreed in writing, this document is issued by the Company subject to its General Conditions of Service printed overleaf, available on request or accessible at http://www.sgs.com/en/Terms-and-Conditions.aspx and, for electronic format documents, subject to Terms and Conditions for Electronic Documents at http://www.sgs.com/en/Terms-and-Conditions/Terms-e-Document.aspx. Attention is drawn to the limitation of liability, indemnification and jurisdiction issues defined therein. Any holder of this document is advised that information contained hereon reflects the Company's findings at the time of its intervention only and within the limits of Client's instructions, if any. The Company's sole responsibility is to its Client and this document does not exonerate parties to a transaction from exercising all their rights and obligations under the transaction documents. This document cannot be reproduced except in full, without prior written approval of the Company. Any unauthorized alteration, forgery or falsification of the content or appearance of this document is unlawful and offenders may be prosecuted to the fullest extent of the law. Unless otherwise stated the results shown in this test report refer only to the sample(s) tested and such sample(s) are retained for 30 days only.
Attention: To check the authenticity of testing /inspection report & certificate, please contact us at telephone: (86-755) 8307 1443, or email: CN.Doccheck@sgs.com

No.10, Weiye Road, Innovation Park, Kunshan, Jiangsu, China 215300 t(86-512)57355888 f(86-512)57370818 www.sgsgroup.com.cn
中国・江苏・昆山市留学生创业园伟业路10号 邮编 215300 t(86-512)57355888 f(86-512)57370818 sgs.china@sgs.com

6.4.2 Long Pulse Radar Test Waveform

Table 6 – Long Pulse Radar Test Waveform

Radar Type	Pulse Width (μsec)	Chirp Width (MHz)	PRI (μsec)	Number of Pulses per *Burst*	Number of *Bursts*	Minimum Percentage of Successful Detection	Minimum Number of Trials
5	50-100	5-20	1000-2000	1-3	8-20	80%	30

The parameters for this waveform are randomly chosen. Thirty unique waveforms are required for the Long Pulse Radar Type waveforms. If more than 30 waveforms are used for the Long Pulse Radar Type waveforms, then each additional waveform must also be unique and not repeated from the previous waveforms.

Each waveform is defined as follows:

1) The transmission period for the Long Pulse Radar test signal is 12 seconds.
2) There are a total of 8 to 20 Bursts in the 12 second period, with the number of Bursts being randomly chosen. This number is Burst Count.
3) Each Burst consists of 1 to 3 pulses, with the number of pulses being randomly chosen. Each Burst within the 12 second sequence may have a different number of pulses.
4) The pulse width is between 50 and 100 microseconds, with the pulse width being randomly chosen. Each pulse within a Burst will have the same pulse width. Pulses in different Bursts may have different pulse widths.
5) Each pulse has a linear frequency modulated chirp between 5 and 20 MHz, with the chirp width being randomly chosen. Each pulse within a transmission period will have the same chirp width. The chirp is centered on the pulse. For example, with a radar frequency of 5300 MHz and a 20 MHz chirped signal, the chirp starts at 5290 MHz and ends at 5310 MHz.
6) If more than one pulse is present in a Burst, the time between the pulses will be between 1000 and 2000 microseconds, with the time being randomly chosen. If three pulses are present in a Burst, the random time interval between the first and second pulses is chosen independently of the random time interval between the second and third pulses.
7) The 12 second transmission period is divided into even intervals. The number of intervals is equal to Burst Count. Each interval is of length (12,000,000 / Burst Count) microseconds. Each interval contains one Burst. The start time for the Burst, relative to the beginning of the interval, is between 1 and [(12,000,000 / Burst Count) – (Total Burst Length) + (One Random PRI Interval)] microseconds, with the start time being randomly chosen. The step interval for the start time is 1 microsecond. The start time for each Burst is chosen randomly.

A representative example of a Long Pulse Radar Type waveform:

1) The total test waveform length is 12 seconds.
2) Eight (8) Bursts are randomly generated for the Burst Count.
3) Burst 1 has 2 randomly generated pulses.
4) The pulse width (for both pulses) is randomly selected to be 75 microseconds.
5) The PRI is randomly selected to be at 1213 microseconds.

Unless otherwise agreed in writing, this document is issued by the Company subject to its General Conditions of Service printed overleaf, available on request or accessible at http://www.sgs.com/en/Terms-and-Conditions.aspx and, for electronic format documents, subject to Terms and Conditions for Electronic Documents at http://www.sgs.com/en/Terms-and-Conditions/Terms-e-Document.aspx. Attention is drawn to the limitation of liability, indemnification and jurisdiction issues defined therein. Any holder of this document is advised that information contained hereon reflects the Company's findings at the time of its intervention only and within the limits of Client's instructions, if any. The Company's sole responsibility is to its Client and this document does not exonerate parties to a transaction from exercising all their rights and obligations under the transaction documents. This document cannot be reproduced except in full, without prior written approval of the Company. Any unauthorized alteration, forgery or falsification of the content or appearance of this document is unlawful and offenders may be prosecuted to the fullest extent of the law. Unless otherwise stated the results shown in this test report refer only to the sample(s) tested and such sample(s) are retained for 30 days only.
Attention: To check the authenticity of testing /inspection report & certificate, please contact us at telephone: (86-755) 8307 1443, or email: CN.Doccheck@sgs.com

No.10, Weiye Road, Innovation Park, Kunshan, Jiangsu, China 215300 t(86-512)57355888 f(86-512)57370818 www.sgsgroup.com.cn
中国・江苏・昆山市留学生创业园伟业路10号 邮编 215300 t(86-512)57355888 f(86-512)57370818 sgs.china@sgs.com

6) Bursts 2 through 8 are generated using steps 3 – 5.
7) Each Burst is contained in even intervals of 1,500,000 microseconds. The starting location for Pulse 1, Burst 1 is randomly generated (1 to 1,500,000 minus the total Burst 1 length + 1 random PRI interval) at the 325,001 microsecond step. Bursts 2 through 8 randomly fall in successive 1,500,000 microsecond intervals (i.e. Burst 2 falls in the 1,500,001 – 3,000,000 microsecond range).

Unless otherwise agreed in writing, this document is issued by the Company subject to its General Conditions of Service printed overleaf, available on request or accessible at http://www.sgs.com/en/Terms-and-Conditions.aspx and, for electronic format documents, subject to Terms and Conditions for Electronic Documents at http://www.sgs.com/en/Terms-and-Conditions/Terms-e-Document.aspx. Attention is drawn to the limitation of liability, indemnification and jurisdiction issues defined therein. Any holder of this document is advised that information contained hereon reflects the Company's findings at the time of its intervention only and within the limits of Client's instructions, if any. The Company's sole responsibility is to its Client and this document does not exonerate parties to a transaction from exercising all their rights and obligations under the transaction documents. This document cannot be reproduced except in full, without prior written approval of the Company. Any unauthorized alteration, forgery or falsification of the content or appearance of this document is unlawful and offenders may be prosecuted to the fullest extent of the law. Unless otherwise stated the results shown in this test report refer only to the sample(s) tested and such sample(s) are retained for 30 days only.
Attention: To check the authenticity of testing /inspection report & certificate, please contact us at telephone: (86-755) 8307 1443, or email: CN.Doccheck@sgs.com
No.10, Weiye Road, Innovation Park, Kunshan, Jiangsu, China 215300 t(86-512)57355888 f(86-512)57370818 www.sgsgroup.com.cn
中国・江苏・昆山市留学生创业园伟业路10号 邮编 215300 t(86-512)57355888 f(86-512)57370818 sgs.china@sgs.com

6.4.3 Frequency Hopping Radar Test Waveform

Table 7 – Frequency Hopping Radar Test Waveform

Type	Pulse Width (μsec)	PRI (μsec)	Pulses per Hop	Hopping Rate (kHz)	Hopping Sequence Length (msec)	Minimum Percentage of Successful Detection	Minimum Number of Trials
6	1	333	9	0.333	300	70%	30

For the Frequency Hopping Radar Type, the same Burst parameters are used for each waveform. The hopping sequence is different for each waveform and a 100-length segment is selected from the hopping sequence defined by the following algorithm:

The first frequency in a hopping sequence is selected randomly from the group of 475 integer frequencies from 5250 – 5724 MHz. Next, the frequency that was just chosen is removed from the group and a frequency is randomly selected from the remaining 474 frequencies in the group. This process continues until all 475 frequencies are chosen for the set. For selection of a random frequency, the frequencies remaining within the group are always treated as equally likely.

Unless otherwise agreed in writing, this document is issued by the Company subject to its General Conditions of Service printed overleaf, available on request or accessible at http://www.sgs.com/en/Terms-and-Conditions.aspx and, for electronic format documents, subject to Terms and Conditions for Electronic Documents at http://www.sgs.com/en/Terms-and-Conditions/Terms-e-Document.aspx. Attention is drawn to the limitation of liability, indemnification and jurisdiction issues defined therein. Any holder of this document is advised that information contained hereon reflects the Company's findings at the time of its intervention only and within the limits of Client's instructions, if any. The Company's sole responsibility is to its Client and this document does not exonerate parties to a transaction from exercising all their rights and obligations under the transaction documents. This document cannot be reproduced except in full, without prior written approval of the Company. Any unauthorized alteration, forgery or falsification of the content or appearance of this document is unlawful and offenders may be prosecuted to the fullest extent of the law. Unless otherwise stated the results shown in this test report refer only to the sample(s) tested and such sample(s) are retained for 30 days only.
Attention: To check the authenticity of testing /inspection report & certificate, please contact us at telephone: (86-755) 8307 1443, or email: CN.Doccheck@sgs.com

No.10, Weiye Road, Innovation Park, Kunshan, Jiangsu, China 215300 t(86-512)57355888 f(86-512)57370818 www.sgsgroup.com.cn
中国・江苏・昆山市留学生创业园伟业路10号 邮编 215300 t(86-512)57355888 f(86-512)57370818 sgs.china@sgs.com

6.5 Calibration of Radar Waveform

6.5.1 Radar Waveform Calibration Procedure

1) A 50 ohm load is connected in place of the spectrum analyzer, and the spectrum analyzer is connected to place of the master
2) The interference Radar Detection Threshold Level is -62dBm+1dB +2.54dBi = -58.46dBm that had been taken into account the output power range and antenna gain.
3) The following equipment setup was used to calibrate the conducted radar waveform. A vector signal generator was utilized to establish the test signal level for radar type 0. During this process there were no transmissions by either the master or client device. The spectrum analyzer was switched to the zero spans (time domain) at the frequency of the radar waveform generator. Peak detection was used. The spectrum aAAnalyzer resolution bandwidth (RBW) and video bandwidth (VBW) were set to 3 MHz. The spectrum analyzer had offset -1.0dB to compensate RF cable loss 1.0dB.
4) The vector signal generator amplitude was set so that the power level measured at the spectrum analyzer was -62dBm+1dB +2.54dBi = -58.46dBm. Capture the spectrum analyzer plots on short pulse radar waveform.

6.5.2 Conducted Calibration Setup

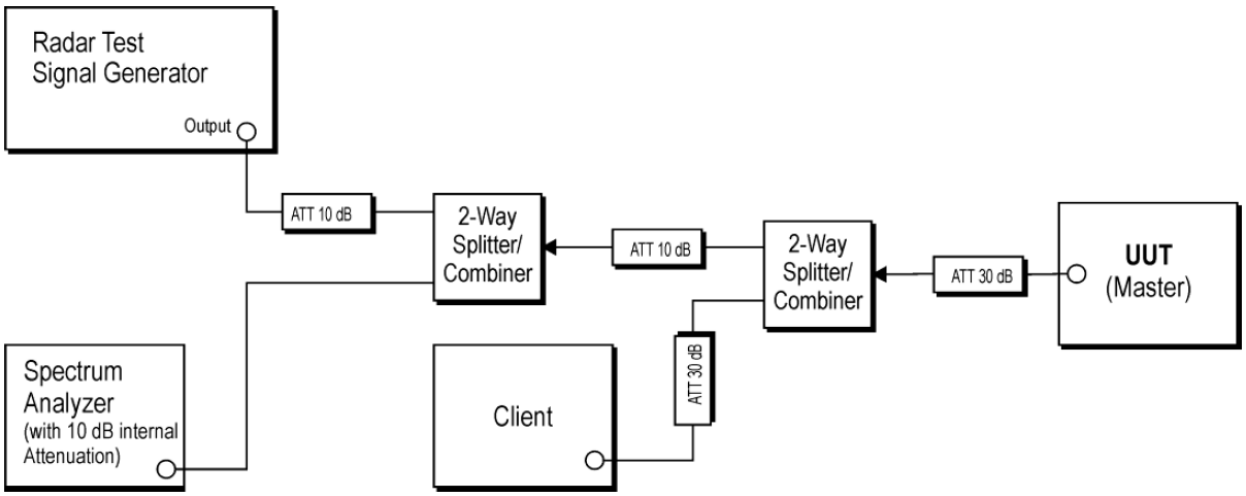

Remark: During the test, a lower radar signal level -58.59dBm was used.

Unless otherwise agreed in writing, this document is issued by the Company subject to its General Conditions of Service printed overleaf, available on request or accessible at http://www.sgs.com/en/Terms-and-Conditions.aspx and, for electronic format documents, subject to Terms and Conditions for Electronic Documents at http://www.sgs.com/en/Terms-and-Conditions/Terms-e-Document.aspx. Attention is drawn to the limitation of liability, indemnification and jurisdiction issues defined therein. Any holder of this document is advised that information contained hereon reflects the Company's findings at the time of its intervention only and within the limits of Client's instructions, if any. The Company's sole responsibility is to its Client and this document does not exonerate parties to a transaction from exercising all their rights and obligations under the transaction documents. This document cannot be reproduced except in full, without prior written approval of the Company. Any unauthorized alteration, forgery or falsification of the content or appearance of this document is unlawful and offenders may be prosecuted to the fullest extent of the law. Unless otherwise stated the results shown in this test report refer only to the sample(s) tested and such sample(s) are retained for 30 days only.
Attention: To check the authenticity of testing /inspection report & certificate, please contact us at telephone: (86-755) 8307 1443, or email: CN.Doccheck@sgs.com
No.10, Weiye Road, Innovation Park, Kunshan, Jiangsu, China 215300 t(86-512)57355888 f(86-512)57370818 www.sgsgroup.com.cn
中国・江苏・昆山市留学生创业园伟业路10号 邮编 215300 t(86-512)57355888 f(86-512)57370818 sgs.china@sgs.com

6.6 Test Procedure

1) The radar pulse generator is setup to provide a pulse at frequency that the master and client are operating. A type 0 radar pulse with a 1us pulse width and a 1428us PRI is used for the testing.

2) The vector signal generator is adjusted to provide the radar burst (18 pulses) at the level of approximately -61dBm at the antenna port of the master device.

3) A trigger is provided from the pulse generator to the DFS monitoring system in order to capture the traffic and the occurrence of the radar pulse.

4) EUT will associate with the master at channel. The file “iperf.exe” specified by the FCC is streamed from the PC 2 through the master and the client device to the PC 1 and played in full motion video using Media Player Classic Ver. 6.4.8.6 in order to properly load the network for the entire period of the test.

5) When radar burst with a level equal to the DFS Detection Threshold +1dB is generated on the operating channel of the U-NII device. At time T0 the radar waveform generator sends a burst of pulse of the radar waveform at Detection Threshold +1dB.

6) Observe the transmissions of the EUT at the end of the radar Burst on the Operating Channel. Measure and record the transmissions from the UUT during the observation time (Channel Move Time). One 15 seconds plot is reported for the Short Pulse Radar Type 0. The plot for the Short Pulse Radar Types start at the end of the radar burst. The Channel Move Time will be calculated based on the zoom in 600ms plot of the Short Pulse Radar Type.

7) Measurement of the aggregate duration of the Channel Closed Transmission Time method. With the spectrum analyzer set to zero span tuned to the center frequency of the EUT operating channel at the radar simulated frequency, peak detection, and max hold, the dwell time per bin is given by: Dwell (0.3ms) =S (12000ms) / B (4000); where Dwell is the dwell time per spectrum analyzer sampling bin, S is sweep time and B is the number of spectrum analyzer sampling bins. An upper bound of the aggregate duration of the intermittent control signals of Channel Closing Transmission Time is calculated by: C (ms)= N X Dwell (0.3ms); where C is the Closing Time, N is the number of spectrum analyzer sampling bins (intermittent control signals) showing a U-NII transmission and Dwell is the dwell time per bin.

8) Measurement the EUT for more than 30 minutes following the channel move time to verify that no transmission or beacons occur on this channel.

Unless otherwise agreed in writing, this document is issued by the Company subject to its General Conditions of Service printed overleaf, available on request or accessible at http://www.sgs.com/en/Terms-and-Conditions.aspx and, for electronic format documents, subject to Terms and Conditions for Electronic Documents at http://www.sgs.com/en/Terms-and-Conditions/Terms-e-Document.aspx. Attention is drawn to the limitation of liability, indemnification and jurisdiction issues defined therein. Any holder of this document is advised that information contained hereon reflects the Company's findings at the time of its intervention only and within the limits of Client's instructions, if any. The Company's sole responsibility is to its Client and this document does not exonerate parties to a transaction from exercising all their rights and obligations under the transaction documents. This document cannot be reproduced except in full, without prior written approval of the Company. Any unauthorized alteration, forgery or falsification of the content or appearance of this document is unlawful and offenders may be prosecuted to the fullest extent of the law. Unless otherwise stated the results shown in this test report refer only to the sample(s) tested and such sample(s) are retained for 30 days only.
Attention: To check the authenticity of testing /inspection report & certificate, please contact us at telephone: (86-755) 8307 1443, or email: CN.Doccheck@sgs.com

No.10, Weiye Road, Innovation Park, Kunshan, Jiangsu, China 215300 t(86-512)57355888 f(86-512)57370818 www.sgsgroup.com.cn
中国・江苏・昆山市留学生创业园伟业路10号 邮编 215300 t(86-512)57355888 f(86-512)57370818 sgs.china@sgs.com

6.7 Test Setup

Setup for Client with injection at the Master

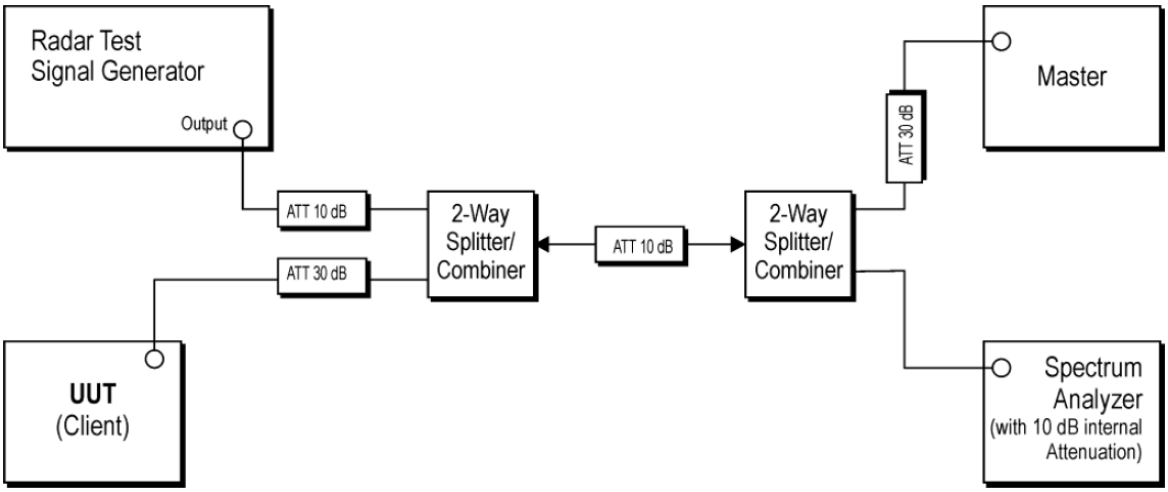

6.8 Channel Loading

System testing will be performed with channel-loading using means appropriate to the data types that are used by the unlicensed device. The following requirements apply:

☐	a) The data file must be of a type that is typical for the device (i.e., MPEG-2, MPEG-4, WAV, MP3, MP4, AVI, etc.) and must generally be transmitting in a streaming mode.
☐	b) Software to ping the client is permitted to simulate data transfer but must have random ping intervals.
☒	c) Timing plots are required with calculations demonstrating a minimum channel loading of approximately 17% or greater. For example, channel loading can be estimated by setting the spectrum analyzer for zero span and approximate the Time On/ (Time On + Off Time). This can be done with any appropriate channel BW and modulation type.
☐	d) Unicast or Multicast protocols are preferable but other protocols may be used. The appropriate protocol used must be described in the test procedures.

Unless otherwise agreed in writing, this document is issued by the Company subject to its General Conditions of Service printed overleaf, available on request or accessible at http://www.sgs.com/en/Terms-and-Conditions.aspx and, for electronic format documents, subject to Terms and Conditions for Electronic Documents at http://www.sgs.com/en/Terms-and-Conditions/Terms-e-Document.aspx. Attention is drawn to the limitation of liability, indemnification and jurisdiction issues defined therein. Any holder of this document is advised that information contained hereon reflects the Company's findings at the time of its intervention only and within the limits of Client's instructions, if any. The Company's sole responsibility is to its Client and this document does not exonerate parties to a transaction from exercising all their rights and obligations under the transaction documents. This document cannot be reproduced except in full, without prior written approval of the Company. Any unauthorized alteration, forgery or falsification of the content or appearance of this document is unlawful and offenders may be prosecuted to the fullest extent of the law. Unless otherwise stated the results shown in this test report refer only to the sample(s) tested and such sample(s) are retained for 30 days only.
Attention: To check the authenticity of testing /inspection report & certificate, please contact us at telephone: (86-755) 8307 1443, or email: CN.Doccheck@sgs.com

No.10, Weiye Road, Innovation Park, Kunshan, Jiangsu, China 215300 t(86-512)57355888 f(86-512)57370818 www.sgsgroup.com.cn
中国・江苏・昆山市留学生创业园伟业路10号 邮编 215300 t(86-512)57355888 f(86-512)57370818 sgs.china@sgs.com

6.9 Test Result

6.9.1 Radar Waveform Calibration Result

Radar Type: 0	Channel: 5530
Level：-58.59 dBm	

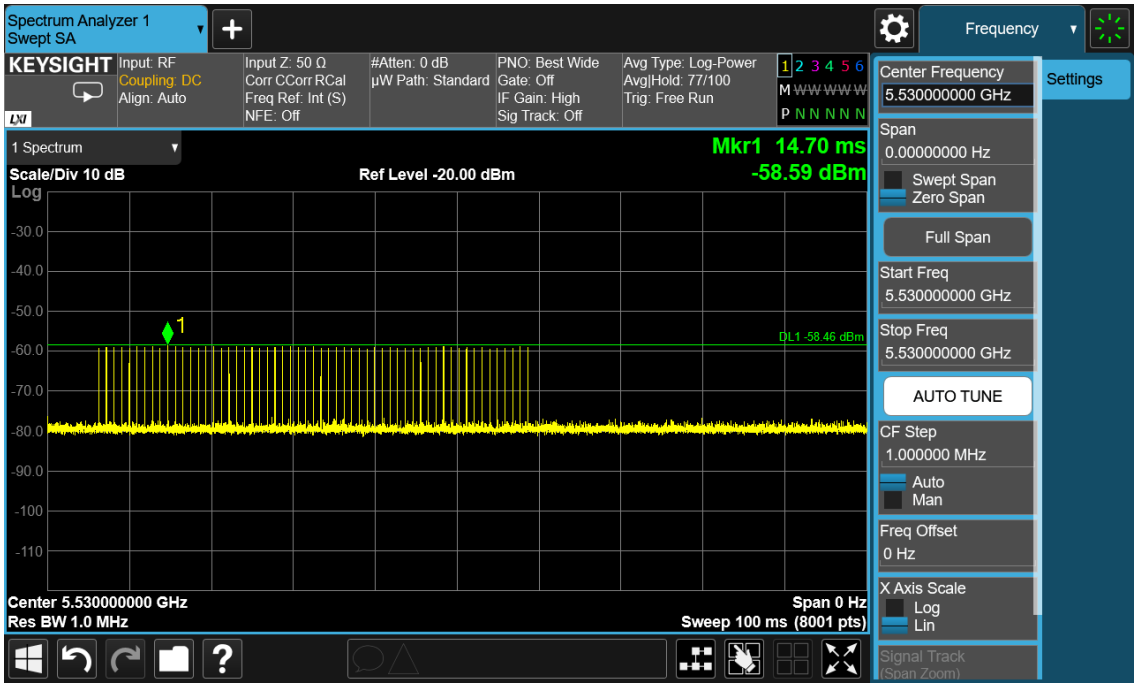

Unless otherwise agreed in writing, this document is issued by the Company subject to its General Conditions of Service printed overleaf, available on request or accessible at http://www.sgs.com/en/Terms-and-Conditions.aspx and, for electronic format documents, subject to Terms and Conditions for Electronic Documents at http://www.sgs.com/en/Terms-and-Conditions/Terms-e-Document.aspx. Attention is drawn to the limitation of liability, indemnification and jurisdiction issues defined therein. Any holder of this document is advised that information contained hereon reflects the Company's findings at the time of its intervention only and within the limits of Client's instructions, if any. The Company's sole responsibility is to its Client and this document does not exonerate parties to a transaction from exercising all their rights and obligations under the transaction documents. This document cannot be reproduced except in full, without prior written approval of the Company. Any unauthorized alteration, forgery or falsification of the content or appearance of this document is unlawful and offenders may be prosecuted to the fullest extent of the law. Unless otherwise stated the results shown in this test report refer only to the sample(s) tested and such sample(s) are retained for 30 days only.
Attention: To check the authenticity of testing /inspection report & certificate, please contact us at telephone: (86-755) 8307 1443, or email: CN.Doccheck@sgs.com

No.10, Weiye Road, Innovation Park, Kunshan, Jiangsu, China 215300 t(86-512)57355888 f(86-512)57370818 www.sgsgroup.com.cn
中国・江苏・昆山市留学生创业园伟业路10号 邮编 215300 t(86-512)57355888 f(86-512)57370818 sgs.china@sgs.com

6.9.2 Channel Loading

Test Case: Channel Loading	
Mode: 11AC80	Channel: 5530
Result: PASS	

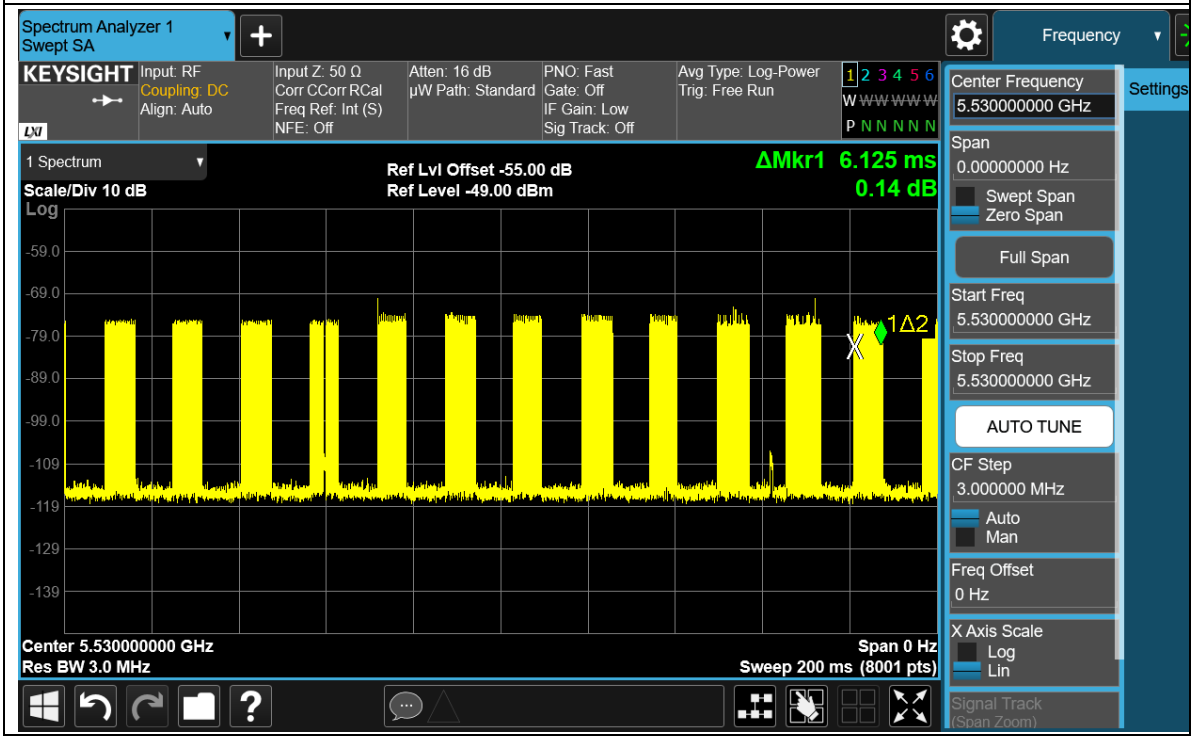

Unless otherwise agreed in writing, this document is issued by the Company subject to its General Conditions of Service printed overleaf, available on request or accessible at http://www.sgs.com/en/Terms-and-Conditions.aspx and, for electronic format documents, subject to Terms and Conditions for Electronic Documents at http://www.sgs.com/en/Terms-and-Conditions/Terms-e-Document.aspx. Attention is drawn to the limitation of liability, indemnification and jurisdiction issues defined therein. Any holder of this document is advised that information contained hereon reflects the Company's findings at the time of its intervention only and within the limits of Client's instructions, if any. The Company's sole responsibility is to its Client and this document does not exonerate parties to a transaction from exercising all their rights and obligations under the transaction documents. This document cannot be reproduced except in full, without prior written approval of the Company. Any unauthorized alteration, forgery or falsification of the content or appearance of this document is unlawful and offenders may be prosecuted to the fullest extent of the law. Unless otherwise stated the results shown in this test report refer only to the sample(s) tested and such sample(s) are retained for 30 days only.
Attention: To check the authenticity of testing /inspection report & certificate, please contact us at telephone: (86-755) 8307 1443, or email: CN.Doccheck@sgs.com

No.10, Weiye Road, Innovation Park, Kunshan, Jiangsu, China 215300 t(86-512)57355888 f(86-512)57370818 www.sgsgroup.com.cn
中国・江苏・昆山市留学生创业园伟业路10号 邮编 215300 t(86-512)57355888 f(86-512)57370818 sgs.china@sgs.com

6.9.3 Channel Shutdown

Test Case: Channel Shutdown	
Mode: 11AC80	Radar Type: 0
Channel: 5530	
Result: PASS Channel Move Time:0.8102736S, Channel Close Time:0.0187563S	

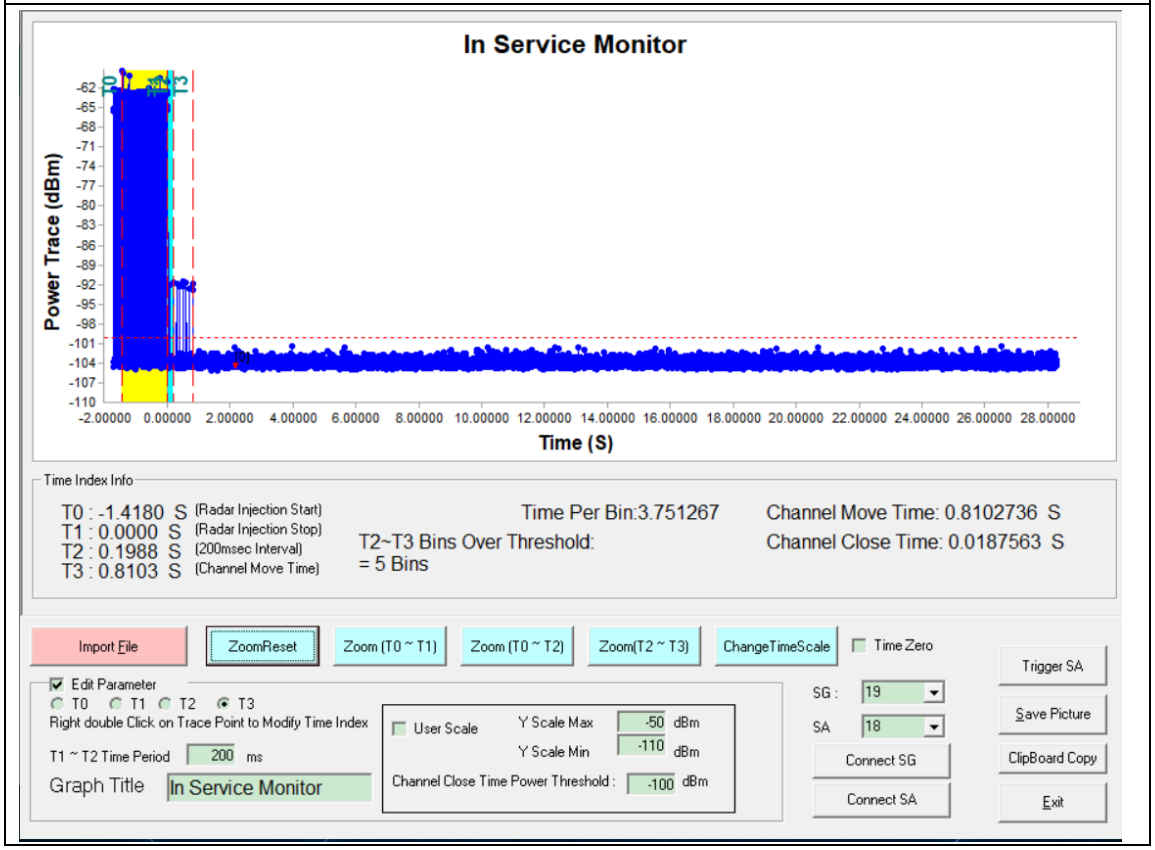

Unless otherwise agreed in writing, this document is issued by the Company subject to its General Conditions of Service printed overleaf, available on request or accessible at http://www.sgs.com/en/Terms-and-Conditions.aspx and, for electronic format documents, subject to Terms and Conditions for Electronic Documents at http://www.sgs.com/en/Terms-and-Conditions/Terms-e-Document.aspx. Attention is drawn to the limitation of liability, indemnification and jurisdiction issues defined therein. Any holder of this document is advised that information contained hereon reflects the Company's findings at the time of its intervention only and within the limits of Client's instructions, if any. The Company's sole responsibility is to its Client and this document does not exonerate parties to a transaction from exercising all their rights and obligations under the transaction documents. This document cannot be reproduced except in full, without prior written approval of the Company. Any unauthorized alteration, forgery or falsification of the content or appearance of this document is unlawful and offenders may be prosecuted to the fullest extent of the law. Unless otherwise stated the results shown in this test report refer only to the sample(s) tested and such sample(s) are retained for 30 days only.
Attention: To check the authenticity of testing /inspection report & certificate, please contact us at telephone: (86-755) 8307 1443, or email: CN.Doccheck@sgs.com

No.10, Weiye Road, Innovation Park, Kunshan, Jiangsu, China 215300 t(86-512)57355888 f(86-512)57370818 www.sgsgroup.com.cn
中国・江苏・昆山市留学生创业园伟业路10号 邮编 215300 t(86-512)57355888 f(86-512)57370818 sgs.china@sgs.com

6.9.4 Non-occupancy period

Test Case: Non-occupancy period	
Mode: 11AC80	Channel: 5530
Result: PASS	

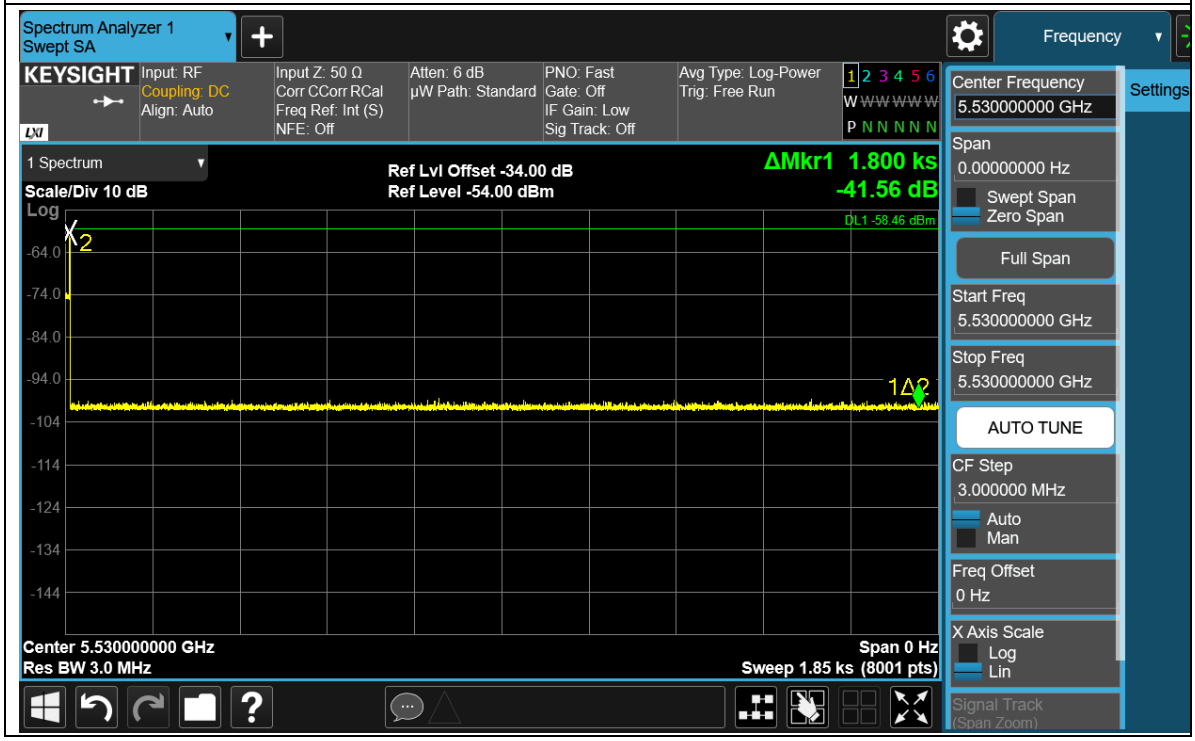

- End of the Report -

Unless otherwise agreed in writing, this document is issued by the Company subject to its General Conditions of Service printed overleaf, available on request or accessible at http://www.sgs.com/en/Terms-and-Conditions.aspx and, for electronic format documents, subject to Terms and Conditions for Electronic Documents at http://www.sgs.com/en/Terms-and-Conditions/Terms-e-Document.aspx. Attention is drawn to the limitation of liability, indemnification and jurisdiction issues defined therein. Any holder of this document is advised that information contained hereon reflects the Company's findings at the time of its intervention only and within the limits of Client's instructions, if any. The Company's sole responsibility is to its Client and this document does not exonerate parties to a transaction from exercising all their rights and obligations under the transaction documents. This document cannot be reproduced except in full, without prior written approval of the Company. Any unauthorized alteration, forgery or falsification of the content or appearance of this document is unlawful and offenders may be prosecuted to the fullest extent of the law. Unless otherwise stated the results shown in this test report refer only to the sample(s) tested and such sample(s) are retained for 30 days only.
Attention: To check the authenticity of testing /inspection report & certificate, please contact us at telephone: (86-755) 8307 1443, or email: CN.Doccheck@sgs.com

No.10, Weiye Road, Innovation Park, Kunshan, Jiangsu, China 215300 t(86-512)57355888 f(86-512)57370818 www.sgsgroup.com.cn
中国・江苏・昆山市留学生创业园伟业路10号 邮编 215300 t(86-512)57355888 f(86-512)57370818 sgs.china@sgs.com