# OCULII – EAGLE CAN FD
# USER MANUAL

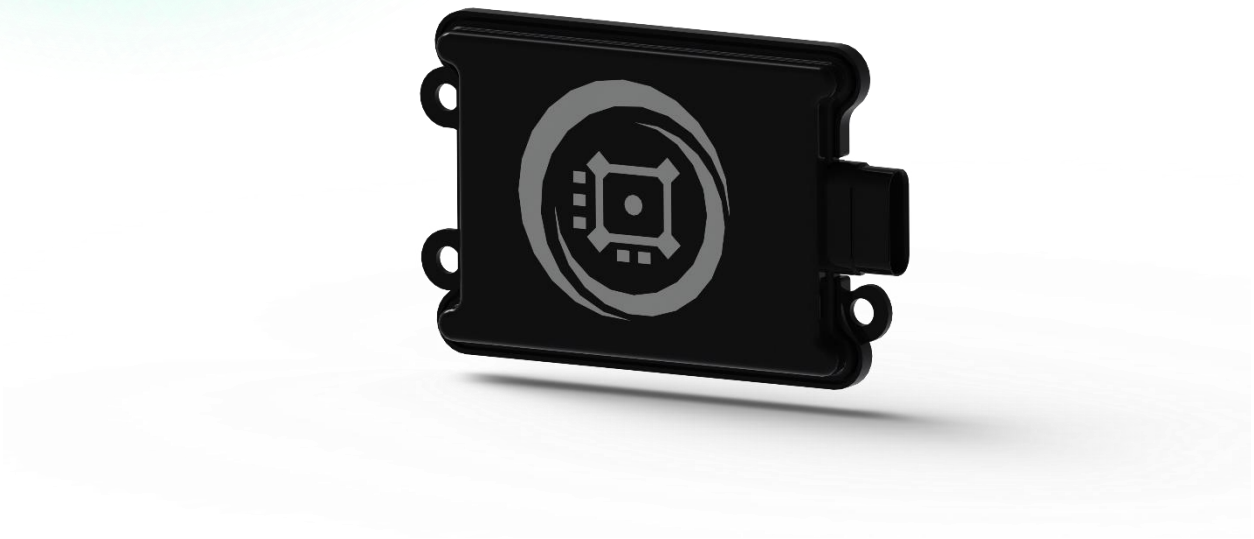

**EDITION 0.6.1**
September 2021

Oculii Corporation
829 Space Drive, Beavercreek, Oh 45434, USA
Copyright © 2021. All rights reserved
Phone: 937-829-0383
Email: info@oculii.com
Website: www.oculii.com

## Table of Contents

**1. Overview** ..... **4**

**2. Radar Technical Specs** ..... **5**
**3. Product** ..... **6**
3.1 Version ..... 6
3.2 Field of View ..... 6
3.3 Application Examples ..... 7
3.4 What is in the Box? ..... 7
3.5 Connection ..... 8
3.6 Connection + Software dependency ..... 9
3.7 Multiple Sensor Connection ..... 10
**4. Mechanical Dimension and Mounting** ..... **12**
4.1 Mechanical Dimension ..... 12
4.2 Sensor Coordinate System ..... 12
4.3 Location Mounting Example ..... 13
4.4 Secondary Surface Mounting ..... 14
4.5 Sensor Radiation Cone ..... 17
4.6 Sensor Operation Temperature ..... 18
4.7 Multiple Sensor Mounting ..... 18
4.8 Manual Alignment ..... 19
**5. Radar Interface and Decode** ..... **19**
5.1 Radar Output Communication Flow ..... 20
5.2 Output List ..... 21
5.3 Header Structure ..... 22
5.4 Detection Structure ..... 23
5.5 Tracker Structure ..... 25
5.6 Radar Coordinate System ..... 26

**6. Windows Visualizer** ..... **27**
8.1 Getting Started ..... 27
8.2 Settings ..... 30
8.3 Saved Results ..... 36
8.4 Binary to CSV file converter ..... 36
**7. Firmware and Visualizer Update** ..... **37**
**8. Safety and Risk** ..... **39**

8.1 Note and Scope of Responsibility ..... 39
8.2 Operating Risk ..... 39
8.3 Service ..... 40

# 1. OVERVIEW

Powered by **Virtual Aperture Imaging,** Oculii's EAGLE 77GHz Point Cloud Radars can deliver thousands of points per second, capturing all relevant environmental information. Oculii's radar point clouds perform in all weather conditions, and each point directly measures highly accurate doppler information, enabling immediate separation and efficient tracking of any moving targets.
**Virtual Aperture Imaging (VAI)** is an array multiplier technique that can be used on any transceiver architecture. The Oculii EAGLE is a single chip, automotive grade sensor. Using VAI, Oculii's EAGLE can achieve $1^0$ angular resolution across an Azimuth Field of View of 110 degrees and $1^0$ angular resolution across an Elevation Field of View of 45 degrees.

# 2. RADAR TECHNICAL SPECIFICATIONS

| | |
|---|---|
| Frequency | 77.0 – 79.0GHz |
| Detection Range | 0m – 400m |

| | |
|---|---|
| Range Resolution | 0.86m |
| Range Accuracy | 0.86m |
| Azimuth Angle Range | $-90^0$ to $+90^0$ |
| Azimuth Angle Resolution | $1^0$ |
| Azimuth Angle Accuracy | $0.70^0$ |
| Elevation Angle Range | $-22.5^0$ to $22.5^0$ |
| Elevation Angle Resolution | $1^0$ |
| Elevation Angle Accuracy | $0.175^0$ |
| Max Speed Range | -86.8m/s to +86.8m/s |
| Speed Resolution | 0.27 m/s |
| Speed Accuracy | 0.09 m/s |
| Points Per Second | 21,000 |
| Cycle Time | 66ms (15Hz) |
| Data Output Format | PEAK CAN |
| Weight | 100g |
| Dimensions (WxHxD) | 110 x 80 x 15 mm |
| Power Consumption | 7.5 W |
| Operation Temperature | -40 to +105 C |

# 3. PRODUCT

## 3.1 Version

Product Version Number: EAGLE CANFD

## 3.2 Field of View

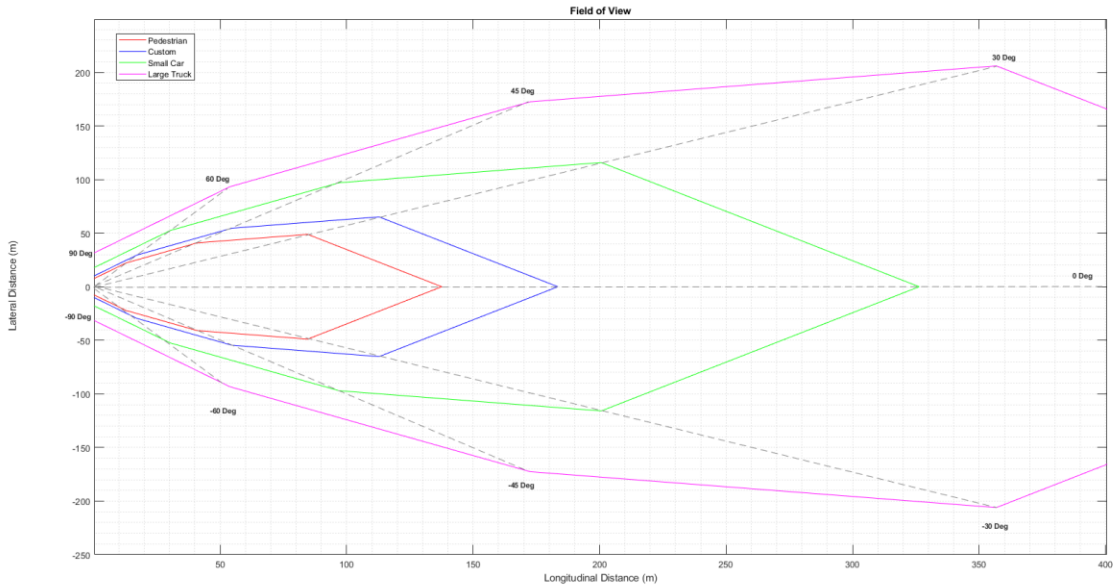


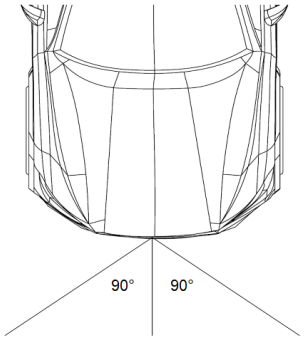


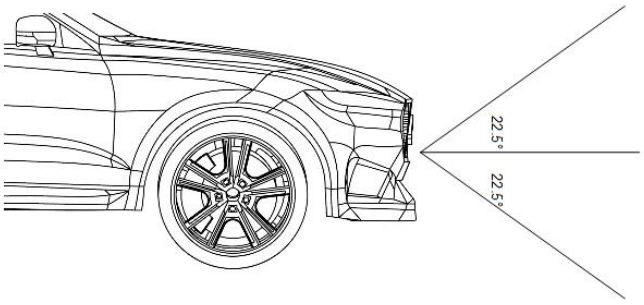


## 3.3 Application Examples

The EAGLE is equipped both with a point cloud capable of outputting thousands of points per second, as well as an embedded tracker capable of simultaneously tracking up to 100 objects. This allows the EAGLE to be used for several applications, some of which are listed below:

- Level 1-5 autonomous driving applications.
- Simultaneous Localization and Mapping (SLAM).
- Intelligent Transportation Systems (ITS).

### 3.4 What is in the Box?

Eagle Sensor

Power Source – 12V, 0.5/1.0A

Wiring Harness

## 3.5 Connection

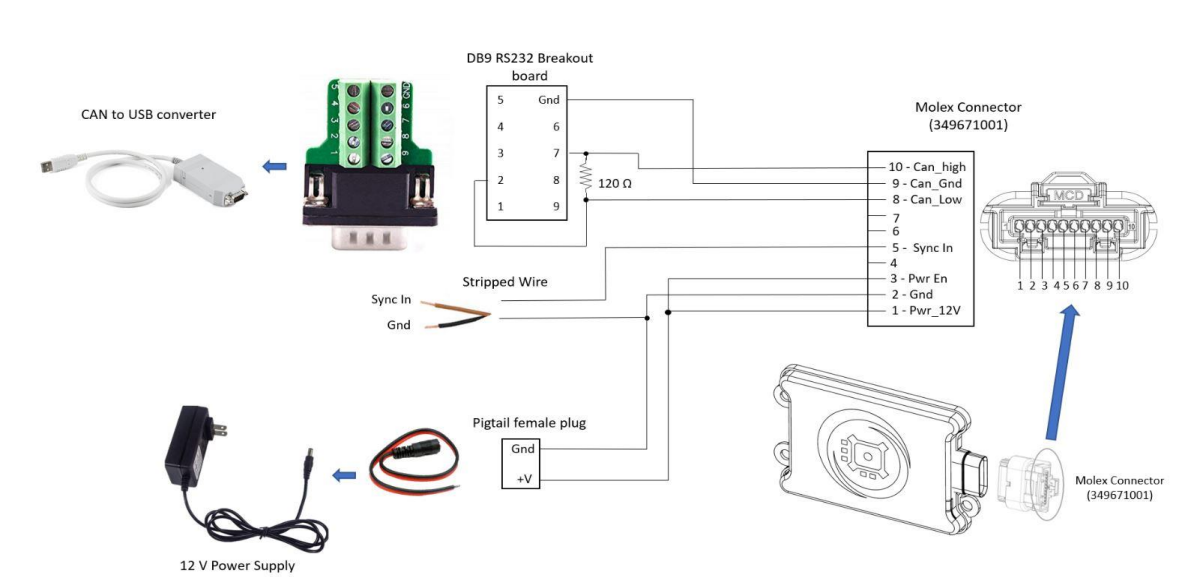


The **Can_High**, **Can_low** & **Can_Gnd** are differential signals and it should be twisted among themselves only. These wires should not be twisted with other wires. This way we reduce interference between signals.

- **Connection Instructions**
  - Connect the Wiring harness to the Eagle sensor.
  - Connect the power source to the wiring harness.
  - Connect the CAN to USB converter to the wiring harness.
  - Connect the USB to a PC to read/visualize data.

- **Pinout**

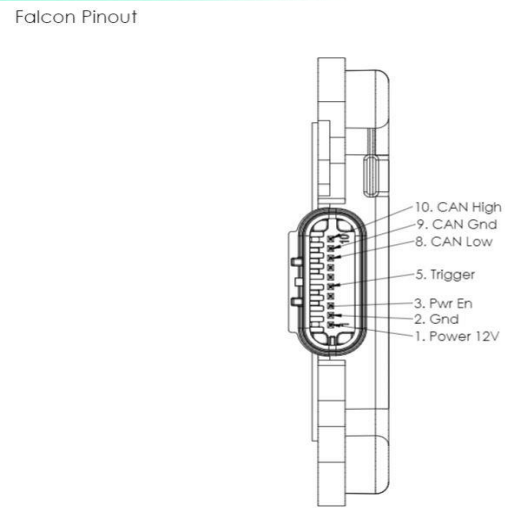


  - The 10 pins connector is used to supply power (+12V, GND, PWR_EN) and communicate with the sensor using CAN (CAN_H, CAN_L, GND_CAN) and UART (UART_TX, UART_RX) interfaces. It is also enabled with a trigger (SYNC_IN) to support an external trigger functionality for the sensor as well as a Flash control pin (FLASH_CTL) which is used during firmware flashing.

- **Power**
  - Wall Adapter Input: 100 – 240V AC
  - Wall Adapter Output: 12V DC 1A

- **I/O**
  - CAN bus is used as a connection between the sensor and the PC. Data received from the sensor is transferred through the CAN bus to the PC by USB port. (For settings on the PC to receive the data from the sensor please refer section 4).

### 3.6 Connection + Software Dependency

**Note: To run Oculii's software with the Eagle Mini the user will be required to purchase a PCAN-USB CAN-FD interface (IPEH-002021). Oculii's software has been developed with Peak System's drivers.**

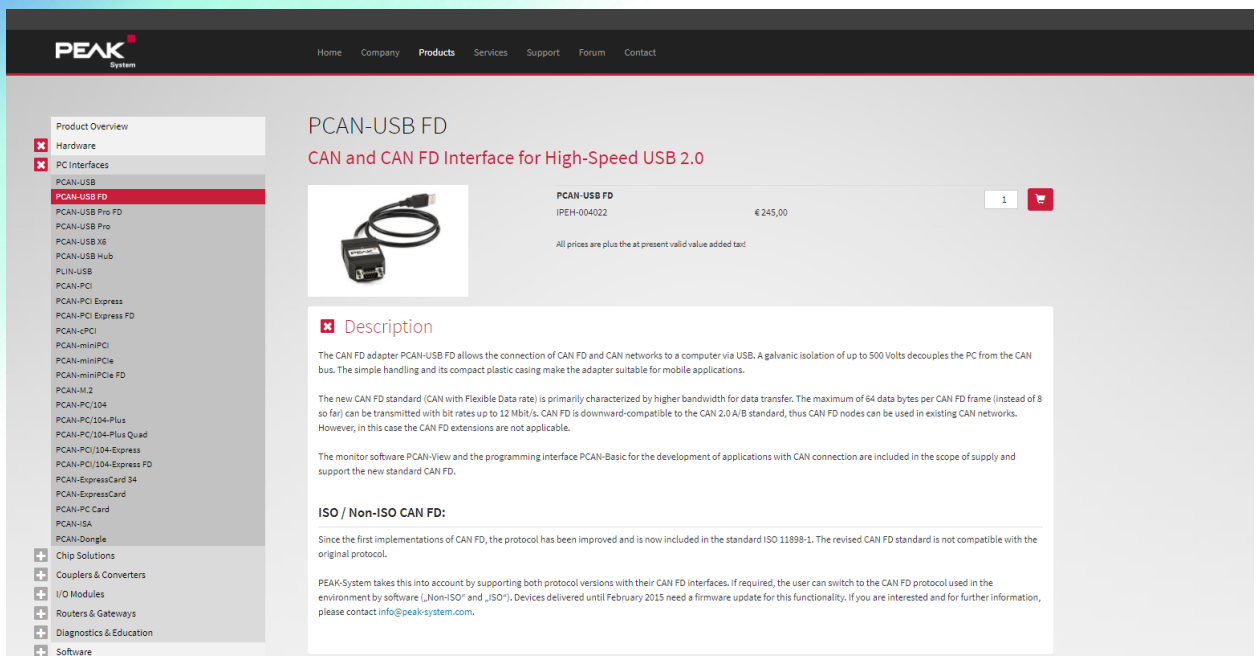


The drivers can be downloaded from the Peak Systems website. Link: [https://www.peak-system.com/PCAN-USB-FD.365.0.html?&L=1](https://www.peak-system.com/PCAN-USB-FD.365.0.html?&L=1)

For **Multiple Sensor** connection (up to 6 units) Oculii recommends purchasing a PCAN-USB X6 Hub (IPEH-004062) that can be found here: [https://www.peak-system.com/PCAN-USB-X6.438.0.html?&L=1](https://www.peak-system.com/PCAN-USB-X6.438.0.html?&L=1)

However, the user can choose to just receive the radar output with their own application without the use of PCAN-USB CAN-FD interface. For the same, please refer to the section 5 of this manual for radar interface and decode. Note that this form of communication will not be supported by Oculii's softwares (OculiiWinView and SDK) and as such features like Firmware update, data visualization, mounting input, switch mode will not be supported. To access the same Oculii recommends using the above mentioned **PCAN-USB CAN-FD interface.**

### 3.7 Multiple Sensor Connection

When more than one sensor is used (n sensors) in the installation the connection can be made as shown in the figure below which shows the connection for n=5. Instead of connecting the USB port of the sensor to the PC, it can be connected to a CAN bus hub, with one USB from the hub connected to the PC.

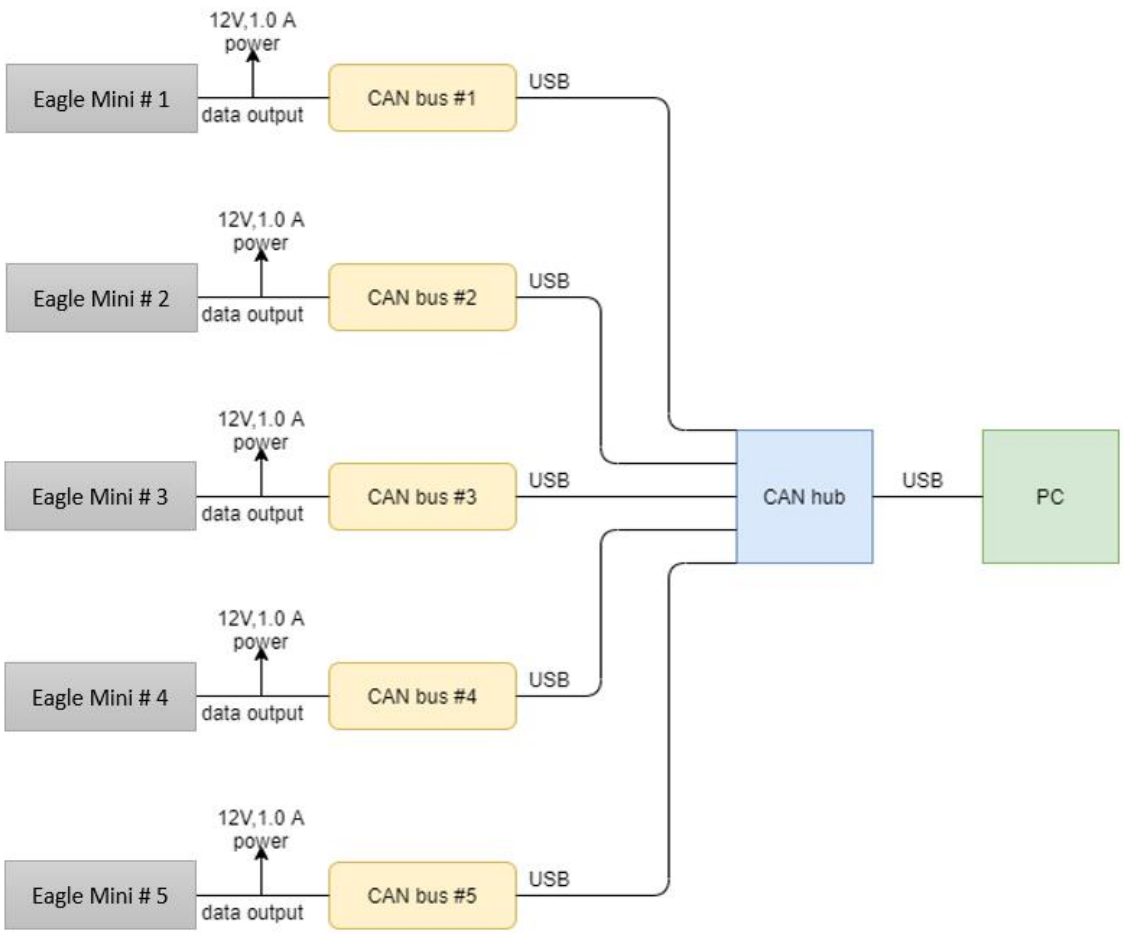

# 4. MECHANICAL DIMENSIONS & MOUNTING

## 4.1 Mechanical Dimension

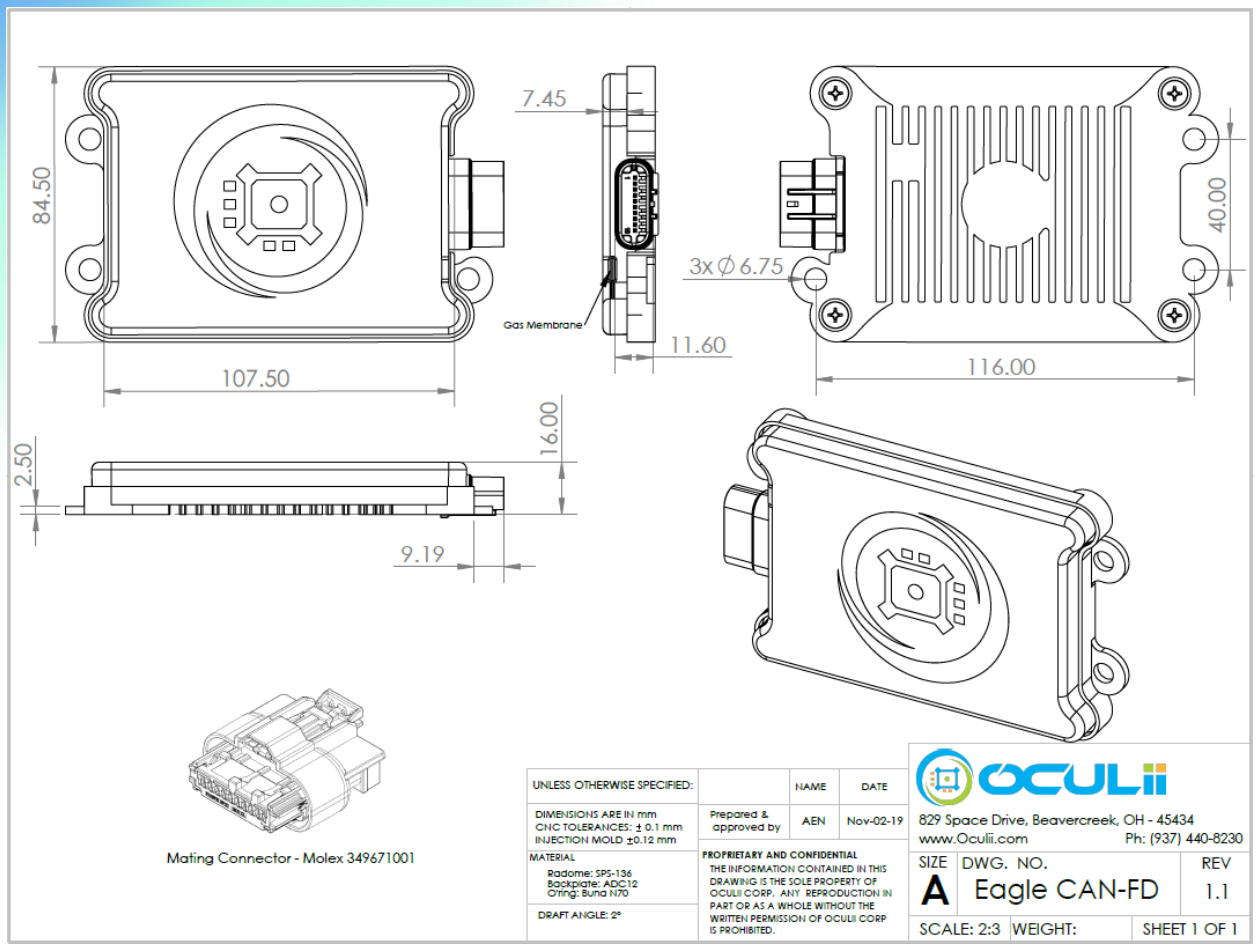


## 4.2 Sensor Coordinate System

The sensor coordinate system is defined in the image below. The sensor orientation is with a quarter inch screw hole in the bottom and the ethernet connector on the right-hand side of the sensor (seen from front). All the angular measurements input to the system should be between 0° and 360°

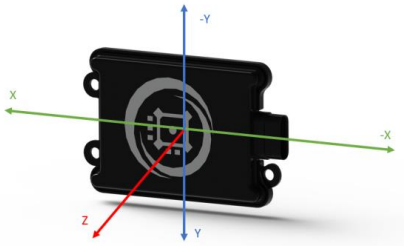


## 4.3 Location Mounting Example

The location mounting example includes a description for the horizontal and vertical position of the sensor location.

### i) At 0-degree vertical angular rotation (no upward or downward tilt)

Horizontal Translation: Restriction is dependent on length of CAN cable. Note that the sensor data will be with respect to the sensor and not the vehicle center.
Horizontal Rotation: Should be rotated less than 30 degrees in either direction from the intended location of maximum power.
Vertical Translation: 0.3m - 3.0m above ground level.
Vertical Rotation: 0 degrees.

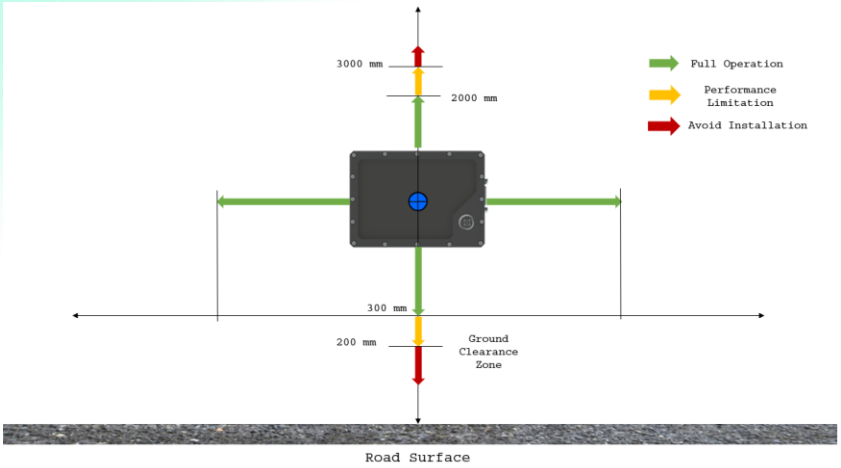


In the diagram above the mounting tolerance of the sensor is provided. With no vertical rotation, the sensor can be placed from 0.3m to 3.0m above the ground and has full operation in the horizontal plane. The sensor can also be rotated on the horizontal plane but should be within 30 degrees of intended location of interest to ensure that maximum power is directed towards to region of interest.

### ii) With angular rotation (with an upwards or downward tilt)

Horizontal Translation: Restriction is dependent on length of CAN cable. Note that the sensor data will be with respect to the sensor and not the vehicle center.
Horizontal Rotation: Should be rotated less than 30 degrees in either direction from the intended location of maximum power.
Vertical Translation: Maximum installation height can be up to 50m (recommended 0 to 15m).
Vertical Rotation: Rotation should depend on the intended location of maximum power and should be calculated with respect to the height the sensor is positioned at.

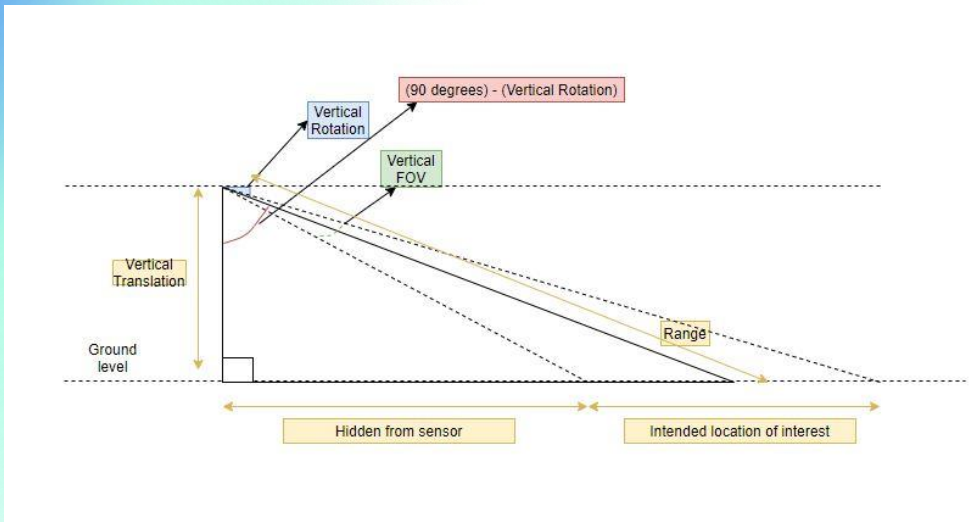


In the figure above the sensor is placed at a height and is tilted down in order to see a specified region (an over bridge traffic monitoring example). Similarly, by adjusting the height and the tilt angle, the EAGLE could be oriented for different applications requiring different intended regions of interest (examples include a small tilt upwards from the bumper to eliminate ground reflection, or a small tilt down when mounted on top of trucks to see objects close to the bus) . Note that the data received is with respect to the center of the sensor. Any physical adjustments must be accounted on the user/customers end.

## 4.4 Secondary Surface Mounting (RADOME)

The sensor can be mounted with a surface between the radar and the outside environment (for example – vehicle bumper). This enclosure is called a Radar Dome (RADOME). Configuration of the RADOME for optimal performance depends on several factors listed below.

i) Material type
ii) Thickness
iii) Distance
iv) Tilt/Curvature of surface
v) Paint

Following are short descriptions on how these factors impact the performance of the sensor and how they can be configured for optimal performance.
Note: The radar is equipped with a front plate so a secondary surface mount for initial testing and validation is not recommended as performance degrades with addition of any secondary surface.

**i) Material Type**

Material properties should only be considered at the 77GHz frequency band and should have the following properties:

- Low di-electric constant (for low surface reflection)

- Low di-electric loss (for reduced transition damping of signal)
- Roughness less than lambda/10 (~400um)

Below is a table of commonly used secondary surface materials

| Material | Di-electric constant (Ɛr) at 77Ghz |
|---|---|
| Polypropylene | 2.35 |
| Polyamide | 2.75 |
| Polycarbonate | 2.80 |
| PC-PBT (Polycarbonate Type) | 2.90 |
| ABS (Acrylnitril-Butadien-Styrol) | 3.12 |
| PMMA (Poly Methyl Methacrylate) | 3.40 |
| ASA (Acrylonitrile Styrene Acrylate) | 3.80 |

Note: Di-electric constant (permittivity) of materials differ among manufacturers. Ensure that the material properties are quoted by all manufacturers at 77GHz bandwidth.

**ii) Material Thickness**

For optimal permittivity, the thickness of the material needs to be calculated. The material thickness can be any integer multiple of the optimal thickness (n*optimal thickness). A higher integer increases the attenuation, thus smaller thickness is recommended.
Using the following 3 formulas we can calculate the thickness of the surface:

A. $\lambda_o = c_0 / f_c$
B. $\lambda_m = \lambda_o / (\text{sqrt } \varepsilon_r)$
C. $T_m = \lambda_m / 2$

$\lambda_0$ : Wavelength, $c_0$ : Speed of light ($3 * 10^8$), $f_c$ = 77GHz, $\varepsilon_r$ : Relative permittivity in material, $\lambda_m$ : Wavelength in material, $T_m$ : Optimal Thickness of Material
In the table below we calculate the thickness for the materials mentioned before:

| Material | Di-electric constant ($\varepsilon_r$) at 77Ghz | Optimal Thickness of Material (mm) |
|---|---|---|
| Polypropylene | 2.35 | 1.27 |

| | | |
|---|---|---|
| Polyamide | 2.75 | 1.18 |
| Polycarbonate | 2.80 | 1.17 |
| PC-PBT (Polycarbonate Type) | 2.90 | 1.15 |
| ABS (Acrylnitril-Butadien-Styrol) | 3.12 | 1.10 |
| PMMA (Poly Methyl Methacrylate) | 3.40 | 1.06 |
| ASA (Acrylonitrile Styrene Acrylate) | 3.80 | 1.00 |

**iii) Distance**

- The distance between the radar sensor and the RADOME needs to be an integer multiple of lambda/2 which is ~1.95mm, thus n*1.95mm is acceptable.
- The distance should be large enough to avoid mechanical vibrations, mechanical interference, and mechanical stress.
- The distance should be enough to avoid thin films of water, snow, or mud from developing on the sensor front plate.

**iv) Tilt/Curvature of the surface**

The angle between the sensor and the secondary surface is the tilt angle. The tilt angle should always be between 0 to 30 degrees. Note that smaller tilt angles could introduce multipath, raise noise levels, or introduce false targets. Higher tilt angles increase the effective thickness and thus the damping effect of the material increases.
To prevent distortion of the signal, the secondary surface needs to be smooth with roughness less than lambda/10 (~400um). The curvature should be uniform and avoid sharp edges or abrupt thickness changes as shown in the image below.

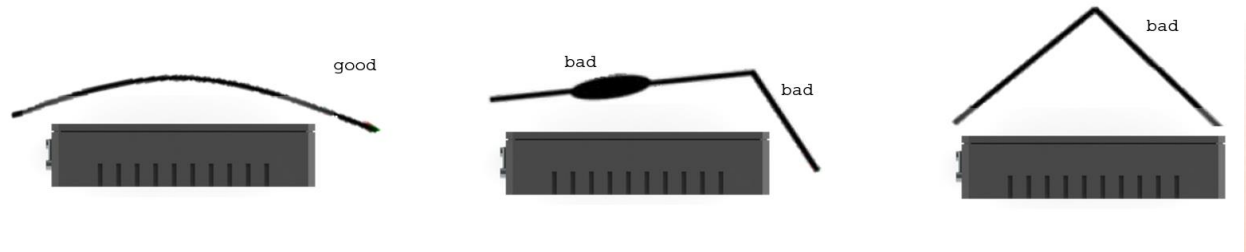


**v) Paint**

For layers of paint, varnish, primer to be introduced on the secondary surface a study on the degradation of the signal would need to be performed. These layers would influence the performance of the sensor and need to be taken into consideration when choosing a secondary surface. Up to 4 layers of paint could be allowed if attenuation is kept within spec in the entire system.

Further, for metallic paint, more considerations will need to take place. The percentage of metal in the paint, the size of the metal particles in the paint and the thickness of the different layers of paint can all influence the attenuation of the radar and will need to be studied and kept within spec of the radar.

The max attenuation acceptable for the Oculii EAGLE to maintain its performance is described below:

- One-way attenuation shall not exceed 2dB
- Max reflectivity co-efficient shall not exceed -2.2dB.

## 4.5 Sensor Radiation Cone

The sensor radiation cone is shown in the following diagrams. The sensor radiation cone shall be kept free from metallic objects, or any objects that can interfere with the radar performance. The horizontal field of view for the sensor is 120 degrees and the vertical field of view is 40 degrees, both symmetric to the center of the sensor.

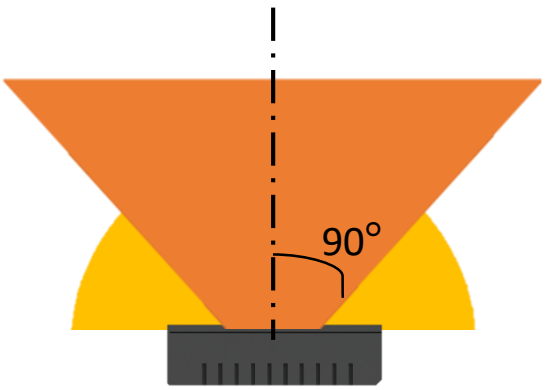


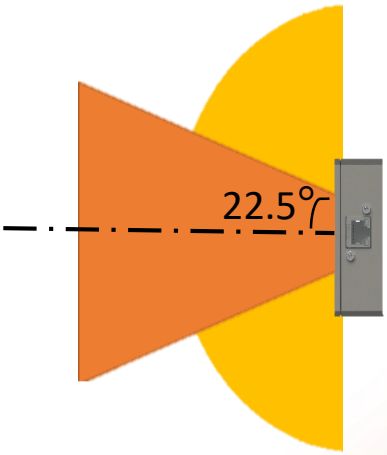


## 4.6 Sensor Operation Temperature

The sensor is designed to operate in the temperature range between **- 40 to +105 Celsius**. The metallic body of the sensor is the main medium of heat transfer. To ensure proper heat transfer the sensor should be exposed to cool free flowing air and should be in direct contact with thermal heat transferring materials.

## 4.7 Multiple sensors mounting

When mounting multiple sensors note that each sensor behaves like an individual unit with the data output with respect to the center of the sensor. Multiple orientations are possible if the above consideration is followed. Note the rotation and translation of the physical mounted sensors and adjust the radar data to the center of the vehicle as required. The figure below shows one installation scenario. In this case the sensors are installed at the four corners of the vehicle at 45 degrees with respect to the direction of motion of the vehicle. A fifth sensor is installed at the center facing the direction of motion. More information on how to measure the rotation and translation of the sensors can be found under section 8.2.

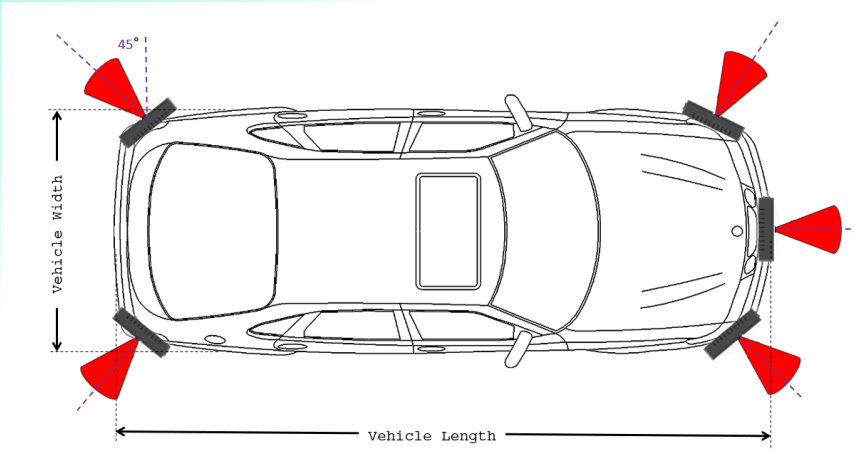


### 4.8 Manual Alignment

The EAGLE sensor needs to be manually adjusted along all 3 planes. Misalignment can be a result of many factors such as static deviations due to sensor and mechanical fixture tolerance, and dynamic deviations in loading and suspension. Variations in temperature and mechanical vibrations over time could also influence the calibration. The introduction of a secondary surface could also have an effect.

The user/customer shall determine misalignment via simulation or measurement. The user could validate the alignment with a simple test as described below.

After mounting the sensor place a corner reflector at 0 degrees in front of the sensor at 4.0m distance and same height from the ground. Measure the physical range between the center of the sensor and the center of the corner reflector. Look at the radar data and ensure that the z value equals 4m and the x and y values equal 0m.

## 5. RADAR INTERFACE AND DECODE

This section briefs the protocol used by Oculii for the transmission of detection and tracker data frames from the Oculii Radar Sensor.

The Eagle radar sensor outputs the output list (Header + Detections + Tracks + Footer) at the configured frame rate. The output list is comprised of the Header, Detection information and

Track information.

The Header is 48 Bytes and contains the Frame Number, Version Number, Number of Detection, Number of Tracks, Host Speed, Host Angle, and the accuracy values for Range, Doppler, Alpha and Beta. It also contains a few reserved fields for future use.

Each detection information is packaged into 8 Bytes and each track is packaged into 32 Bytes. The footer is 32 bytes. The number of detection field and the number of tracks field in the header provide the value for decoding detection and tracks, respectively.

## 5.1 Radar Output Communication Flow

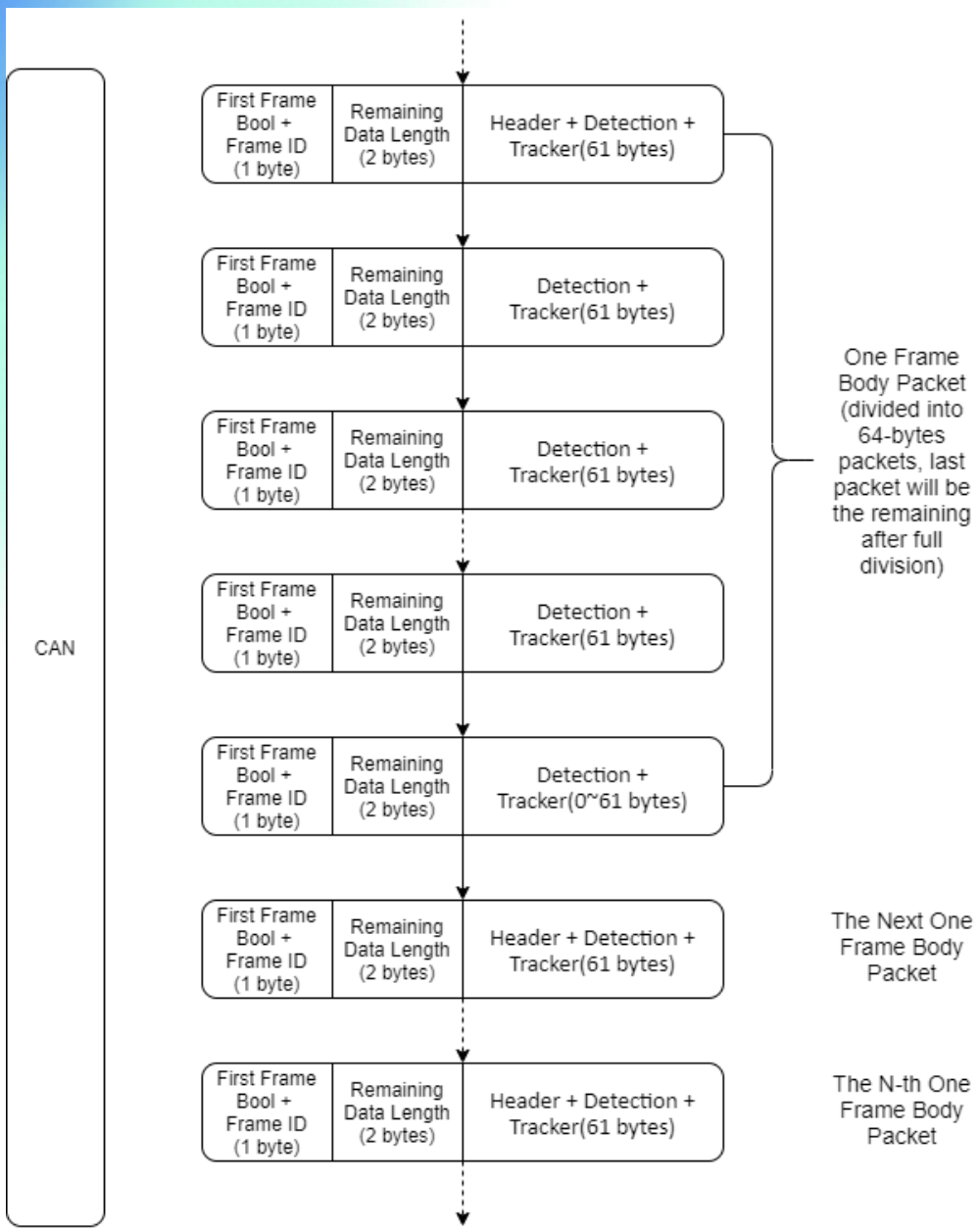


First Frame + Frame ID and Remaining Data Length are in the little-endian format and the remaining length means the data length remaining in one frame packet. The data is dynamic and thus the length needs to be read in between frames. Since the data packet is truncated in chunks of 64 bytes, a calculation would need to be done to determine the number of 64 chunks as well as the length of the last chunk of data. For example, if the length is 200, the data will come as 3 chunks of 64 bytes and 1 chunk of 8 bytes.

### 5.2 Output List: Header + Detection + Tracker

**Output List: Header + Detection + Tracker + Footer**

| Header Block (48 bytes) | | | | | |
|---|---|---|---|---|---|
| Magic | Frame Num | Version Num | Num Det | Num Tracks | Decode/ Parse Info |
| 8B | 4B | 4B | 2B | 2B | 28B |

| Detection Block (8 * N) | | | |
|---|---|---|---|
| Det 1 | Det 2 | ... | Det N |
| 8B | 8B | | 8B |

| Tracker Block (32 * Nt) | | | |
|---|---|---|---|
| Track 1 | Track 2 | ... | Track Nt |
| 32B | 32B | | 32B |

| Footer Block (32 Bytes) | |
|---|---|
| CRC | Reserved |
| 4B | 28B |

Header : 384 bits (48 Bytes)

Detection : 64 bits (8 Bytes) * N

Tracks : 256 bits (32 Bytes) * Nt

Footer : (32 Bytes)

## 5.3 Header and Footer Structure

**Header Block (48 bytes)**

| | | | | | | | |
|---|---|---|---|---|---|---|---|
| Magic (8 bytes : 0x21436587) | | | | | | | |
| Frame Number (4 bytes) (uint_32) | | | | Version Number (4 bytes) (uint_32) | | | |
| Number of Detection (2 bytes) (uint_16) | | Number of Tracks (2 bytes) (uint_16) | | Host Speed (2 bytes) (int_16) (Divide by 100 to get value in meters/second) | | Host Angle (2 bytes) (int_16) (Divide by 100 to get value in degrees) | |
| Reserved (2 bytes) | | Reserved (2 bytes) | | Reserved (2 bytes) | | Reserved (2 bytes) | |
| Range Accuracy Idx 0 (2 bytes) (uint_16) (Divide by 10000 to get value in meters) | | Doppler Accuracy Idx 0 (2 bytes) (uint_16) (Divide by 10000 to get value in meters/second) | | Azimuth Accuracy Idx 0 (2 bytes) (uint_16) (Divide by 10000 to get value in degrees) | | Elevation Accuracy Idx 0 (2 bytes) (uint_16) (Divide by 10000 to get value in degrees) | |
| DSP workload (%) | ARM workload (%) | Byte 43 | Byte 44 | Byte 45 | Byte 46 | Byte 47 | Byte 48 |

Magic Header : 8 Bytes, [2 1 4 3 6 5 8 7]
Frame Number : 4 Bytes, uint32_t, frame number
Version number : 4 Bytes, uint32_t, Version number, uint32_t format: MMddhhmm
NumDetections : 2 Bytes, uint16_t, Number of Detection in the frame
NumTracks : 2 Bytes, uint16_t, Number of Tracks in the frame
Host Speed : 2 Bytes, int16_t, divide by 100 to get ego speed in m/s
(e.g. 6453 = 64.53 m/s, e.g. -2456 = -24.56 m/s)
Host Angle : 2 Bytes, int16_t, divide by 100 to get host angle in degree. Clockwise rotation corresponds to positive rotation.
(e.g. 1400 = 14 deg)
Reserved*4 : 8 Bytes, currently reserved as 4 uint, data type could change.
Range Accuracy Idx0 : 2 Bytes, uint16_t, divide by 10000 to get value in m

Doppler Accuracy Idx0 : 2 Bytes, uint16_t, divide by 10000 to get value in m/s
Azimuth Accuracy Idx0 : 2 Bytes, uint16_t, divide by 10000 to get value in degree
Elevation Accuracy Idx0 : 2 Bytes, uint16_t, divide by 10000 to get value in degree
DSP workload : 1 Byte, double
ARM workload : 1 Byte, double
Reserved : 6 Bytes, variable data type.

Footer Block (32 bytes)

| Reserved (4 Bytes) | | | | Reserved (4 bytes) | | | |
|---|---|---|---|---|---|---|---|
| Range Accuracy Idx 1<br>(2 bytes) (uint_16)<br>(Divide by 10000 to get value in meters) | | Doppler Accuracy Idx 1<br>(2 bytes) (uint_16)<br>(Divide by 10000 to get value in meters/second) | | Azimuth Accuracy Idx 1<br>(2 bytes) (uint_16)<br>(Divide by 10000 to get value in degrees) | | Elevation Accuracy Idx 1<br>(2 bytes) (uint_16)<br>(Divide by 10000 to get value in degrees) | |
| Byte 17 | Byte 18 | Byte 19 | Byte 20 | Byte 21 | Byte 22 | Byte 23 | Byte 24 |
| Byte 25 | Byte 26 | Byte 27 | Byte 28 | Byte 29 | Byte 30 | Byte 31 | Byte 32 |

Range Accuracy Idx1 : 2 Bytes, uint16_t, divide by 10000 to get value in m
Doppler Accuracy Idx1 : 2 Bytes, uint16_t, divide by 10000 to get value in m/s
Azimuth Accuracy Idx1 : 2 Bytes, uint16_t, divide by 10000 to get value in degree
Elevation Accuracy Idx1 : 2 Bytes, uint16_t, divide by 10000 to get value in degree

## 5.4 Detection Structure:

| Reserved<br>(1 bit) | Flag<br>(1 bit) | Reserved<br>(6 bit) | Power Value<br>(16 bits)<br>(0 to 65535) | Beta Index<br>(10 bits)<br>(-511 to 512) |
|---|---|---|---|---|
| Beta cont.. | Azimuth Index<br>(10 bits)<br>(-511 to 512) | Doppler Index<br>(10 bits)<br>(-511 to 512) | Range Index<br>(10 bits)<br>(0 to 1023) | |

- **Range Index**: 10 bits, multiply with Range Accuracy value to get Range value in m.
- **Doppler Index:** 10 bits, multiply with Doppler Accuracy value to get Doppler value in m/s.
- **Azimuth Index:** 10 bits, multiply with Azimuth Accuracy value to get Azimuth (alpha) value in degree.
- **Beta Index:** 10 bits, multiply with Elevation Accuracy value to get Elevation (beta) value in

degree.

- **Power:** 16 bits, 2 bytes, uint16_t, 0 to 65535, Power value is in dB scale and represents the signal to noise ratio of the detection. Divide by 100 to decode power. (e.g. 208 = 2.08dB)

- **Flag:** 1 bit, used for decoding. Source code provided in the SDK.

  If bit is 0: Use Index 0 accuracy values from the header to obtain range, doppler, alpha and beta.
  If bit is 1: Use Index 1 accuracy values from the header to obtain range, doppler, alpha and beta.

- **Reserved***: 7 bits.

- **XYZ:** The XYZ coordinates can be retrieved using the following equation:
  X = Range * Sin(Alpha) * Cos(Beta)
  Y = Range * Sin(Beta)
  Z = Range * Cos(Alpha) * Cos(Beta)

Below is a diagram showing the same.

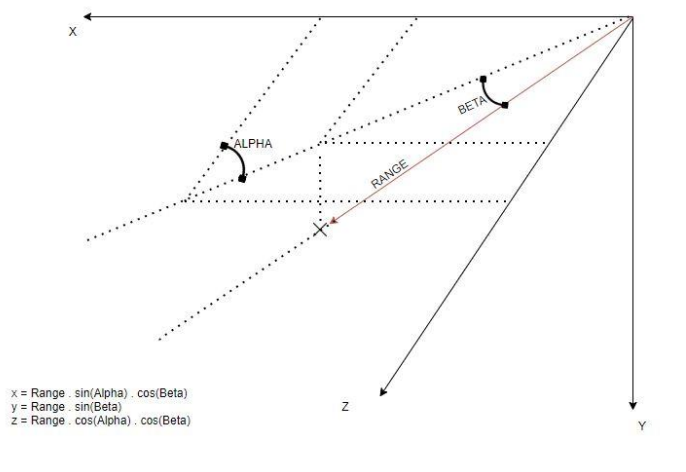

## 5.5 Tracker Structure:

Each Track (32 Bytes, 256 bits)

| | | | | | | | |
|---|---|---|---|---|---|---|---|
| Track ID (4 bytes) | | XPos (2 bytes) | YPos (2 bytes) | ZPos (2 bytes) | XDot (2 bytes) | YDot (2 bytes) | ZDot (2 bytes) |
| Res 1 (2 bytes) | Res 2 (2 bytes) | Res 3 (2 bytes) | Flag (2 bytes) | Class (2 bytes) | Conf. (2 bytes) | Res 4 (2 bytes) | Res 5 (2 bytes) |

- **Track ID:** 32 bits, 4 bytes, uint32_t, 0 to 4294967296 Track ID

- **Track XPos:** 16 bits, 2 bytes, int16_t, -32768 to 32767, divide by 100 to get x in m (e.g. 6453 = 64.53 m, e.g.: -2456 = -24.56 m)

- **Track YPos:** 16 bits, 2 bytes, int16_t, -32768 to 32767, divide by 100 to get y in m (e.g. 6453 = 64.53 m, e.g. -2456 = -24.56 m)

- **Track ZPos;** 16 bits, 2 bytes, int16_t, -32768 to 32767, divide by 100 to get z in m (e.g. 12654 = 126.54 m)

- **Track XDot:** 16 bits, 2 bytes, int16_t, -32768 to 32767, divide by 100 to get speed in the x direction in m/s (e.g. 6453 = 64.53 m/s, e.g. -2456 = -24.56 m/s)

- **Track YDot:** 16 bits, 2 bytes, int16_t, -32768 to 32767, divide by 100 to get speed in the y direction in m/s (e.g. 6453 = 64.53 m/s, e.g. -2456 = -24.56 m/s)

- **Track ZDot:** 16 bits, 2 bytes, int16_t, -32768 to 32767, divide by 100 to get speed in the z direction in m/s (e.g. 6453 = 64.53 m/s, e.g. -2456 = -24.56 m/s)

- **Reserved*5** : 2 Bytes, currently reserved as uint16_t, data type could change.

- **Track Flag:** 16 bits, 2 bytes, uint16_t, 0 to 65535. 16 1-bit flags, the flag definitions are internal to Oculii.
  Bit 3 – Bit 15 : Reserved
  Bit 0, Bit 1, Bit 2 : Track Quality. Currently only values 1 and 2 are used. Filter to use only value '2'.
- **Track Class:** 16 bits, 2 bytes, unit16_t, 0 to 5. Reserved for future.

- 0: Unknown Class
- 1: Pedestrian
- 2: Motorcycle/Bike
- 3: Vehicle and SUV
- 4: Bus and Truck
- 5: Background

- **Track Class Confidence Score:** 16 bits, 2 bytes, unit16_t, 80-99, assigns a confidence score for the classification made in Track Class – higher score corresponds to higher confidence

## 5.6: Radar Coordinate System

Below is a diagram showing the radar coordinate system used in the Eagle CAN sensors.

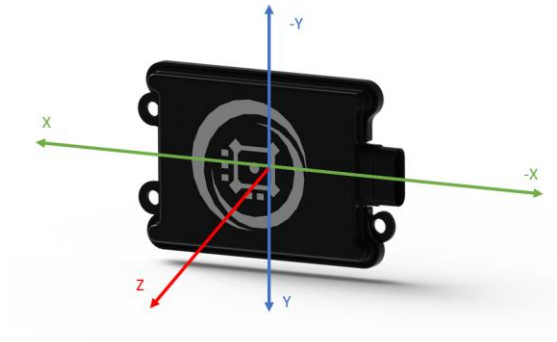

# 6. WINDOWS VISUALIZER

## 6.1 Getting Started

To run the Windows Visualizer, follow the steps below:

Step 1: Plug the Flash Drive into your computer and copy the Oculii folder to your PC's C drive.

Step 2: Follow the path C:\Oculii\Visualizer under which you will find the OculiiWinView application file. Run the application file.

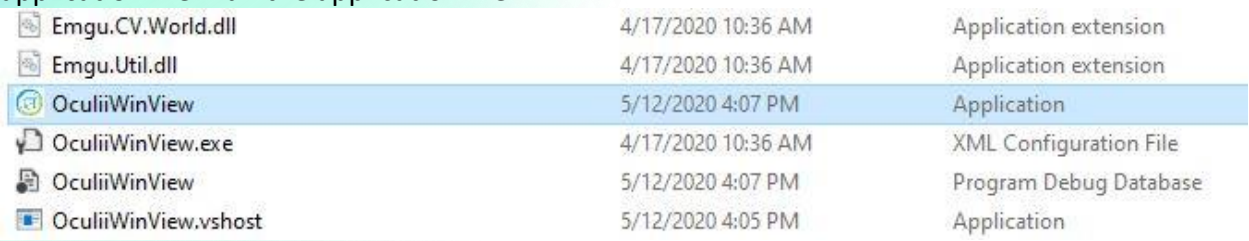

| | | |
|---|---|---|
| Emgu.CV.World.dll | 4/17/2020 10:36 AM | Application extension |
| Emgu.Util.dll | 4/17/2020 10:36 AM | Application extension |
| OculiiWinView | 5/12/2020 4:07 PM | Application |
| OculiiWinView.exe | 4/17/2020 10:36 AM | XML Configuration File |
| OculiiWinView | 5/12/2020 4:07 PM | Program Debug Database |
| OculiiWinView.vshost | 5/12/2020 4:05 PM | Application |

Step 3: Dependency required for installation - Visual C++ Redistributable for Visual Studio 2012 which should be pre-installed in Windows, but if it is not it can be downloaded from the following link: https://www.microsoft.com/en-us/download/confirmation.aspx?id=30679

Step 4: Provide Firewall access to the application when prompted. If your PC does not prompt you to do the same, and if you cannot receive data on the visualizer follow the following steps to allow Firewall access.

Step 4i): Open Control Panel => System and Security => Windows Firewall => Allowed Programs.

Step 4ii) Click the Change Settings button.

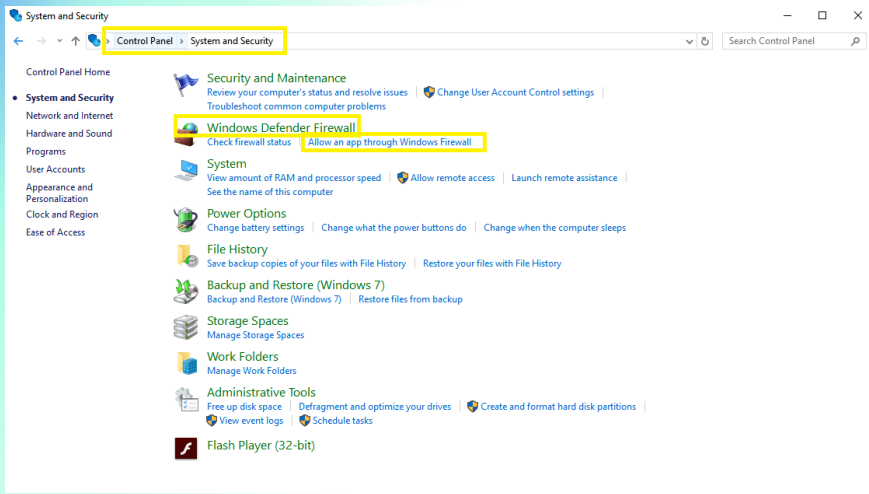


Step 4iii) Check all the Application programs OculiiWinView.exe in the list showing in the figure below.

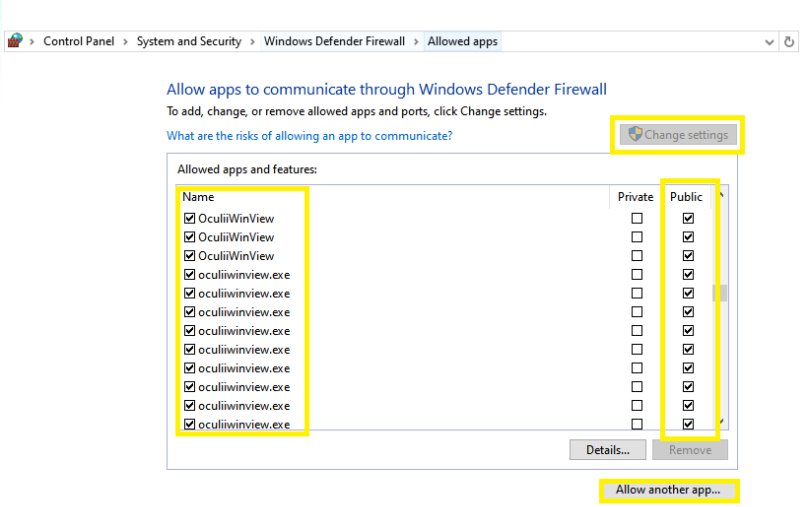


Step 5: **Select "CAN-FD"** on the Application menu.

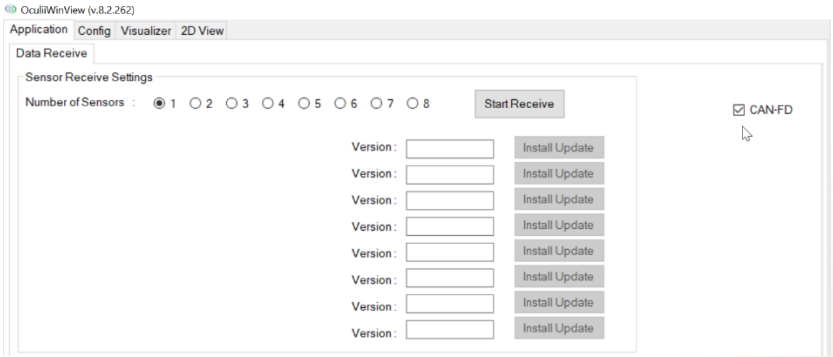


Step 6: Press the 'Start Receive' button after which you will be directed to sensor Mounting information pop-up window. Input the correct mounting information, if you want to run the enhanced point cloud, followed by 'Ok' button. 'Cancel' this step if you want to run the baseline point cloud.

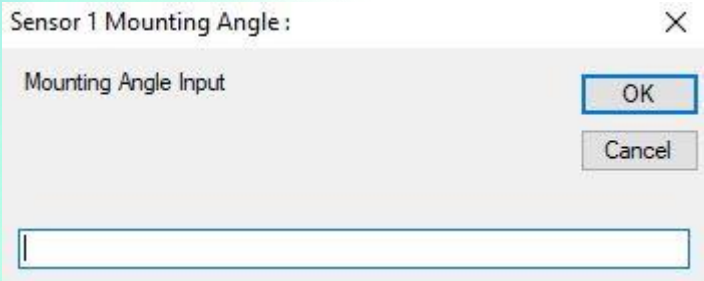


Step 7: You should receive data which can be seen on the right-hand side of the visualizer.

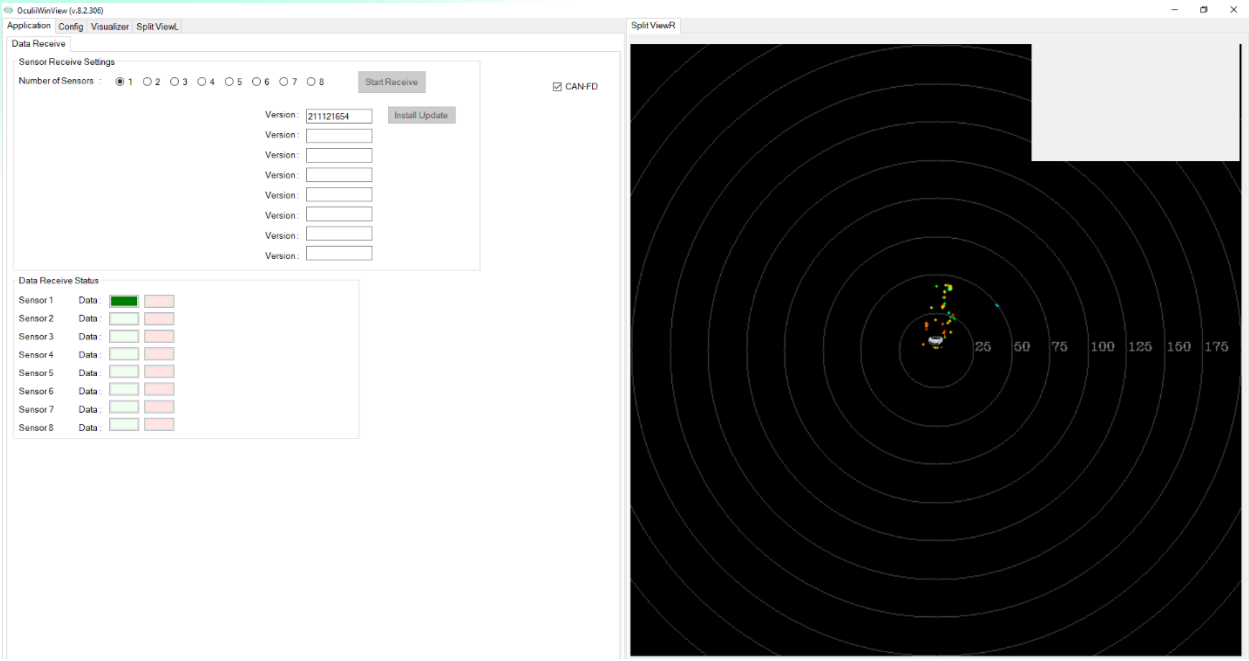


Note: Anytime the user wants to go back from Enhanced Point cloud to Baseline the user should press the 'Skip' button on the Config tab. Anytime the user wants to run Enhanced Point cloud from the Baseline mode the user should press the 'Set' button on the Config tab.
Step 8: To change visualization scale - change the scale values under the SplitView section and then press "Load Scale".

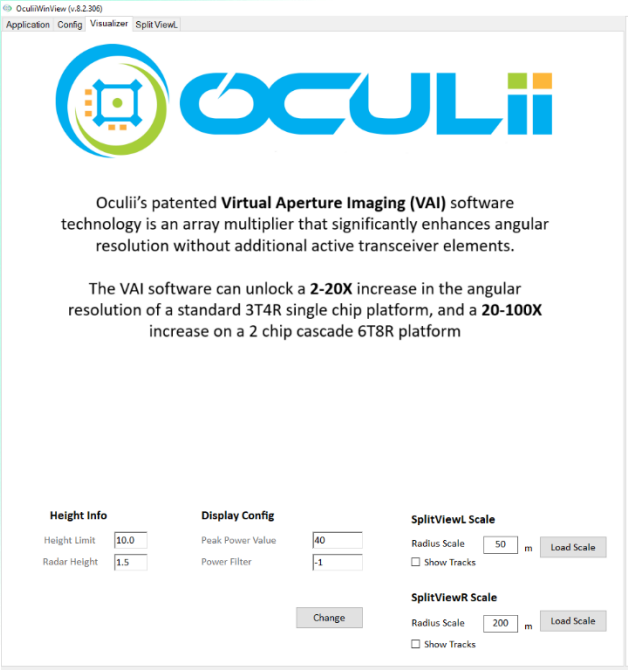


## 6.2 Settings

In the Config, Visualizer and Application tab, there are 7 fields as described below:

i) Mounting Angle (deg) and Mounting Distance (m)
ii) Feature (On/Off)
iii) 3D View
iv) Heatmap View Scale
v) Display Config
vi) Radar Sensors Select

i) **Mounting Angle and Mounting Distance (deg):**

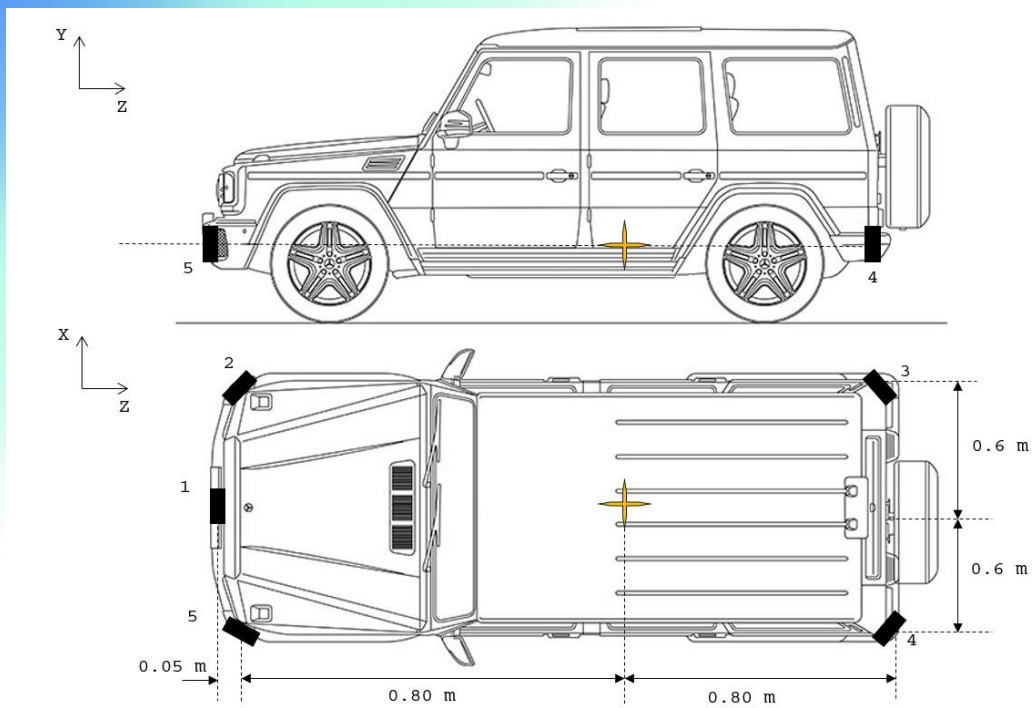


**Mouting Distance (m)**

| | X | Y | Z |
|---|---|---|---|
| Sensor 1 | 0 | 0 | -0.85 |
| Sensor 2 | 0.6 | 0 | -0.8 |
| Sensor 3 | 0.6 | 0 | 0.8 |
| Sensor 4 | -0.6 | 0 | 0.8 |
| Sensor 5 | -0.6 | 0 | -0.8 |
| Sensor 6 | 0 | 0 | 0 |
| Sensor 7 | 0 | 0 | 0 |
| Sensor 8 | 0 | 0 | 0 |

**Mouting Angle (deg)**

| | Yaw | Pitch | Roll |
|---|---|---|---|
| Sensor 1 | 0 | 0 | 0 |
| Sensor 2 | 45 | 0 | 0 |
| Sensor 3 | 135 | 0 | 0 |
| Sensor 4 | 225 | 0 | 0 |
| Sensor 5 | 315 | 0 | 0 |
| Sensor 6 | 0 | 0 | 0 |
| Sensor 7 | 0 | 0 | 0 |
| Sensor 8 | 0 | 0 | 0 |

For multiple sensors connected please note the physical length (z), width (x) and height (y) from the user defined center. In the above diagram the center is defined to be at the same level of installation as the five sensors and at the center of the car. The coordinate axis to be used is defined in the figure as well. The translation values for the five sensors for the figure would be:

**Mouting Distance (m)**

| | X | Y | Z |
|---|---|---|---|
| Sensor 1 | 0 | 0 | -0.85 |
| Sensor 2 | 0.6 | 0 | -0.8 |
| Sensor 3 | 0.6 | 0 | -0.8 |
| Sensor 4 | -0.6 | 0 | 0.8 |
| Sensor 5 | -0.6 | 0 | 0.8 |
| Sensor 6 | 0 | 0 | 0 |
| Sensor 7 | 0 | 0 | 0 |
| Sensor 8 | 0 | 0 | 0 |

For multiple sensors connected please note the physical yaw (if the sensor is mounted flat at ground level and perpendicular to the ground) or the yaw, pitch and roll. In the

visualizer, clockwise rotation is positive from 0 to 360 degrees. Note that these measurements should be with respect to the center that the user has fixed. The sensors individually always report data to the center of the sensor. In the figure above the sensors are installed at ground level and are perpendicular to the ground. The first sensor is at the center and the rest are at 45 degrees from the plane of the vehicle front and back. Thus, the pitch and roll would be 0. The rotation values for the five sensors for the figure would be:

**Mouting Angle (deg)**

| | Yaw | Pitch | Roll |
|---|---|---|---|
| Sensor 1 | 0 | 0 | 0 |
| Sensor 2 | 45 | 0 | 0 |
| Sensor 3 | 135 | 0 | 0 |
| Sensor 4 | 225 | 0 | 0 |
| Sensor 5 | 315 | 0 | 0 |
| Sensor 6 | 0 | 0 | 0 |
| Sensor 7 | 0 | 0 | 0 |
| Sensor 8 | 0 | 0 | 0 |

**ii) Feature (On/Off):**

There are 3 features which can be enabled and disabled in Realtime. If you check the respective checkbox, the feature is enabled. If the checkbox is unchecked, the feature is disabled.

**Feature (On/Off)**

- [x] Show Detection
- [x] Data/Result Save
- [ ] Filter Ground
- [ ] 3D View
- [ ] Height Color
- [ ] Filter Height
- [x] 3D Show Tracks

**(a) Show Detection:**

Checked: Point Cloud data is visualized.
Not Checked: Point Cloud data is hidden.

**(b) Show Tracks:**

Checked: Tracker data is visualized.
Unchecked: Tracker data is hidden.
**(c) Data Save:**
Checked: Data is saved while visualizer is running.
Unchecked: Data is not saved while visualizer is running to preserve disc space.

**iii) 3D View:**

Under the Feature section there is an option to view the data as a 3D point cloud. Check the box "3D" to proceed. The view on the right-hand side of the visualizer will change to 3D. Here is a list of commands that control the viewing of the 3D viewer.

- Right Click and Drag: Pitch
- Left Click and Drag: Yaw
- W: Zoom in
- S: Zoom out
- A: Translation. Move view left (+x direction in radar coordinate)
- D: Translation. Move view right (-x direction in radar coordinate)
- Q: Translation. Move plane down (-y direction in radar coordinate)
- E: Translation. Move plane up (+y direction in radar coordinate)

Under the 3D view there are a few different features that the user can enable/disable certain features as well.

- Height Filter: It removes all the points above the set maximum (maximum height can be set in the Display Config) as well as all points below the ground (0m).
- Height Color: In the 3D view the color is based on height with the red spectrum on VIBGYOR representing targets with a lower height value and the violet spectrum representing targets with a higher height value.
- Show 3D Tracks: Plots the tracks in the 3D Bitmap.

Note: Height filter and Height color will only work together
Note: Height filter and Height color are accurate only when the radar mounting angle has no depression/elevation angle.
The user can also simultaneously view the 2D and 3D point cloud by checking the 3D box and then the 2D Viewer tab found on the top left section of the visualizer. The left hand side display is the 2D display and the right hand side display is the 3D display.

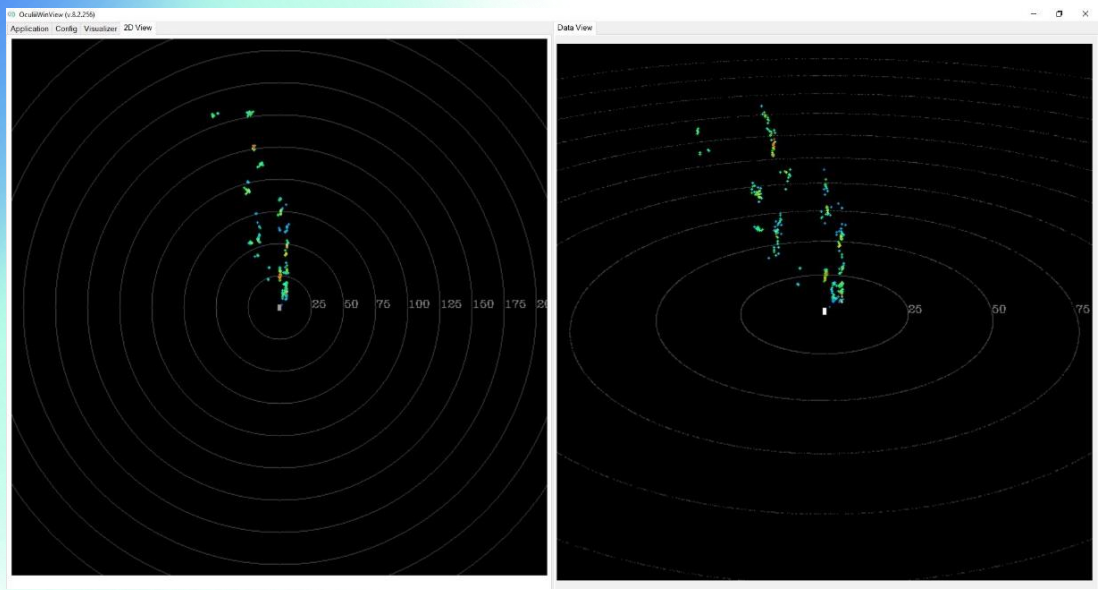


**iv) Heatmap Scale View:**

This field is for controlling the scale in the Data View. We have three parameters to control it.

**SplitViewL Scale**

Radius Scale 50 m Load Scale

☐ Show Tracks

**SplitViewR Scale**

Radius Scale 150 m Load Scale

☐ Show Tracks

(a) **SplitViewL Scale:** This scale controls the left bitmap display.
(b) **SplitViewR Scale:** This scale controls the right bitmap display.
(c) **Show Tracks:** This button click allows for tracks to be displayed in their respective bitmaps.

**v) Display Config:**

There are two parameters which can be controlled for the display config

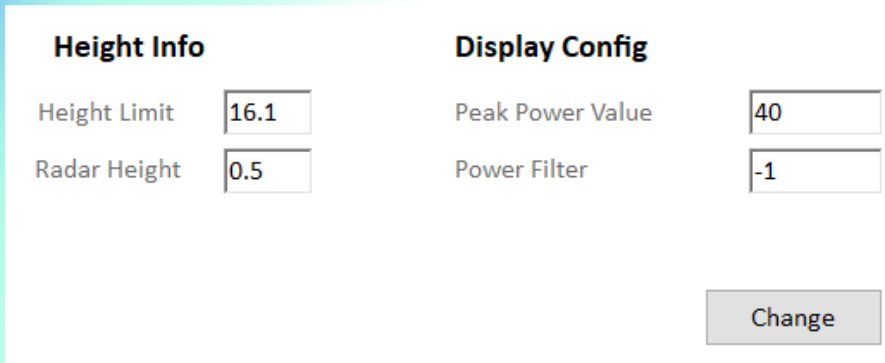


(i) **Peak Power:** The Peak power varies from 0 to 100. It can be controlled to show the higher peak points on the display in Data View. There is a color pattern for each peak power range where colors on the red spectrum represent higher power, and on the violet spectrum represent lower power. This field depends on the power threshold filter entered below.
(ii) **Power Threshold Filter:** The Power Threshold filter varies from 0 to 10. This filters below the specific threshold in dB entered in the textbox. Example: If the power threshold filter is entered as 5, the targets below 5dB are filtered. Default recommended is 0-1dB.
**(iii) Height Limit**: Used to filter out height information beyond a certain height, the limit of which is set here.

**(iv) Radar Height:** For correct visualization of the 3D point cloud information, the correct height of the radar from the ground would be required. The grid in the 3D display is the actual ground, and the point cloud information is displayed from that reference.

**vi) Radar Sensors Select:**

There are two checkboxes in the field which is chosen for the Front Sensor (Single Sensor) and 360-degree (Multi Sensor) views.
Front Sensor View Checked: Radar 1 is automatically checked and only the first radar will display data on the Data View tab.
360 Degree View Checked: All the radars are automatically checked, and they all display data on the Data View tab.

### 6.3 Saved Results

Oculii saves the following results for the user.

i) Binary Point Cloud Data when the visualizer was running.

ii) Saved Point Cloud Video from the visualizer.

The data will be saved under C:\Oculii\Saved Results. A folder will be created with the date the visualizer was run under the [YYYY-MM-DD] format followed by another folder under the [YYYY-MM-DD-HH-MM-SS] format.

### 6.4 Binary to CSV file Converter

The binary file saved by the visualizer can be converted to CSV to read the data.

**To run the Binary to CSV parser:**

a. Copy the 'OculiiParser_BinToCSV' executable to the Sensor - Data folder where you will find a file ending with _Pcl.bin.

b. Run the executable

| Name | Date modified | Type | Size |
|---|---|---|---|
| 11232020_184936_Pcl | 11/23/2020 7:33 PM | Binary File | 63,888 KB |
| OculiiParser_BinToCSV | 11/23/2020 4:35 PM | Application | 29 KB |
| Pcl | 11/23/2020 7:43 PM | Microsoft Excel C... | 822,254 KB |
| Track | 11/23/2020 7:43 PM | Microsoft Excel C... | 26,270 KB |

Both the Point Cloud and Tracker CSV file will be generated from the saved binary.

## 7. FIRMWARE UPDATE ON VISUALIZER

The firmware and configuration files can be updated by following the below procedure.

1. The provided Update_Eagle_CANFD.bin file should be copied to the visualizer folder.

2. Connect the sensor to the PC

3. Run the Windows Visualizer.

4. Click on the Start Receive button.

5. Once the sensor is live and you start to receive data, click on the Install Update button.

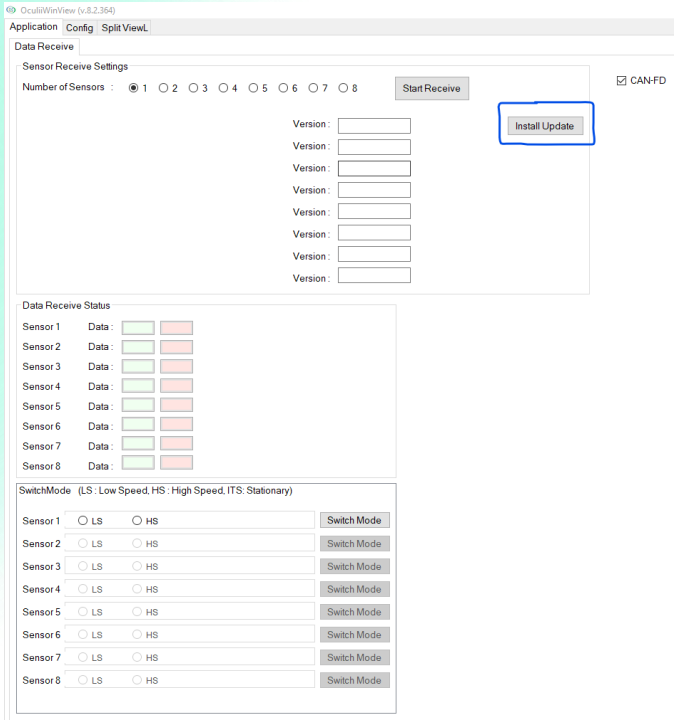


6. The following pop-up will appear. Select sensor type (Eagle CANFD**)** and then click the Update button.

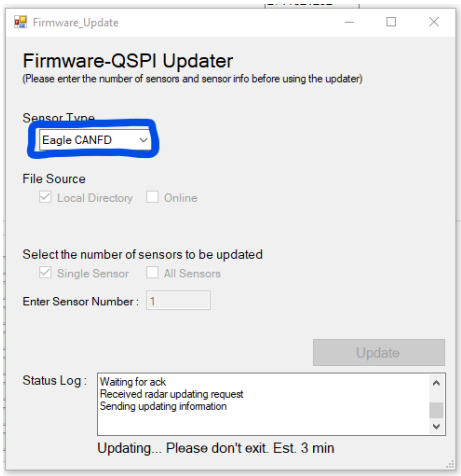


Note: Please do not close the window before the update completes. Please close the window "Firmware_Update" after update finishes and it is recommended to close the window and click the update button for every update.
If the update is not successful after approx. 3 minutes, please close the entire application and power cycle the sensor before attempting a new update.

7. Once the update is complete, the pop-up displays that the update succeeded as below and the data will be visible on the client. The data and new version appears after appox. 10 seconds.

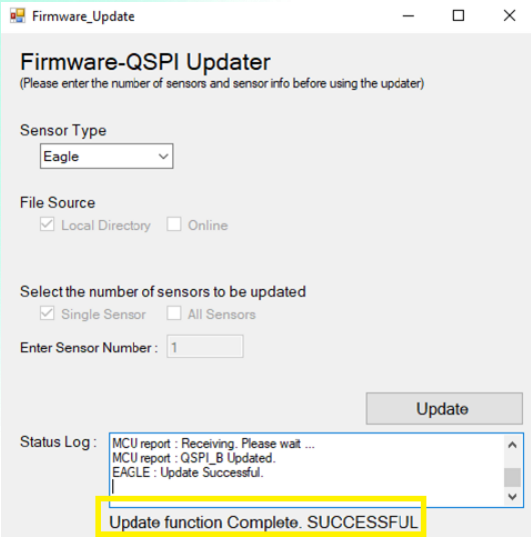

# 8. SAFETY AND RISK

## 8.1 Note and Scope of Responsibility

This section specifies practices the user should adhere to and the risks operators should recognize when operating the Oculii Eagle sensor. This device should only be handled by technical operators with basic technical knowledge. The owner of the sensor module is responsible for the device and understands and observes the safety notes. If the Eagle sensor is a part of a larger system, the system manufacturer is responsible for ensuring that all safety features are practiced. The owner of the device is responsible for ensuring that the device is used for its intended purpose and for the actions of their employees while operating the sensor. The owner is also responsible to notify Oculii as soon as the sensor displays any safety defects.

## 8.2 Operating Risk

i) The system is not defined for free use in safety critical systems. However, it can be integrated into a system by the user, to adhere to safety regulation systems, features, or applications.

ii) The user should be aware of falsified information that could occur over time due to external factors such as mechanical stress, accident, accidental drop, or natural disasters. The user should thus adopt practices that to measure the data output periodically and ensure that it meets expected results. The user should also ensure that any surfaces in the field of view of the sensor are kept clean and metal free. If the sensor starts displaying false information the user should report the same to Oculii.

iii) Lack of knowledge or incomplete training of employees operating the sensor could result in accidents, injury or damage to property, assets, or the environment. Users should ensure all personnel operating the sensor are equipped with the technical knowledge and training to do so.

iv) When deploying multiple sensors ensure that there is no falsified information that is present, either from the interruption of the radar beams or from interference from other sensors or electromagnetic radiations from other devices.

v) When installing the sensor ensure that the front plate or any secondary surface in the field of view is free from the potential accumulation of ice, water or mud films.

vi) Ensure that the power supplied is enough to operate the sensor and that the CAN cable pins are matched to their intended destination.

vii) Ensure that the housing of the sensor develops no scratches or cracks as that can impact signal integrity and heat transfer properties.

## 8.3 FCC Warning

**FCC ID: 2AXVNEAGLE Model: EAGLE**
**This device complies with Part 15 of FCC Rules.** Operation is subject to the following two conditions:

1. This device may not cause harmful interference
2. This device must accept any interference received, including interference that may cause undesired operation.

Changes or modifications not expressly approved by OCULII LLC could void the user's authority to operate the equipment.
This transmitter must not be co-located or operating in conjunction with any other antenna or transmitter.

FCC RF Radiation Exposure Statement

This equipment should be installed and operated with a minimum distance of 40cm between the radiator and your body.
This transmitter complies with FCC radiation exposure limits set forth for an uncontrolled environment.

## 8.4 Service

Oculii must be contacted before the manipulation of the sensor for certain applications. Oculii must be contacted if the sensor starts displaying falsified information over time. For any other service needs and feature requests you could contact Oculii at techsupport@oculii.com.