Pass Management Module of Temperature Measurement & Face Recognition Manual

It can be used with access gates and attendance for communities, office buildings, schools, hotels, scenic spots, transportation hubs and other public service places.

Parameters

Camera	Resolution	2 million pixels
	Type	Binocular wide dynamic camera
	Aperture	F2.4
	Focusing distance	50-150cm
	White balance	auto
	Photo flood light	LED and I Rdual photo flood light
Screen	Size	8.0 inch I PSLCD screen
	Resolution	800 × 1280
	Touch	Not supported (optional support)
Processor	CPU	RK3288 quad-core (optional RK3399 six-core)
	Storage	EMMC 8G
Interface	Network module	Ethernet and 5.0 G (WIFI)
	Audio	2.5W / 4R speakers
	USB	1 USB OTG, 1 USB HOST standard A port
	Serial communication	1 RS232 serial port
	Relay output	1 door open signal output
	Wiegand	One Wiegand 26/34 output, one Wiegand 26/34 input
	Upgrade button	Support Uboot upgrade button
	Wired network	1 RJ45 Ethernet socket

Function	Credit card reader	None (optional I Ccard reader, I Dcard, ID card)
	Face library	Up to 20,000
	1: N face recognition	Support
	1: 1 face comparison	Support
	Stranger detection	Support
	I dentify distance configuration	Support
	UI interface configuration	Support
	Upgrade remote ly	Support
	I nterface	I nterfacesinclude device management, personnel / photo management, record query, etc.
	Deployment method	Support public cloud deployment, privatized deployment, LAN use, stand-alone use
Infrared thermal imaging module	Temperature detection	Support
	Temperature detection distance	0.8 meter (optimal distance 0.5 meter)
	Temp tere meas urement accuracy	≤ ±0.5℃
	Temperature measurement range	10℃~42℃
	Pixels	32 X 32 dots (total 1024 pixels)
	Visitors' temperatu re is n onal and released directly	Support
	Abnormal tem-perature alarm	Support (temperature alarm value can be set)
General parameters	Power	DC12V (±10%)
	Operating temperature	0℃~40℃
	Storage temperature	-20℃~60℃

General parameters	Power consumption	13.5W (Max)
	Installation method	Gate bracket installation
	Size	Standard：269*133*24.5 (mm)
		IC card / ID card：396 *133*24.5 (mm)
Packing list	Machine * 1, power adapter * 1, manual * 1, certificate of conformity * 1	

Installation Notes

1.Module structure description

Optional credit card (ID) version, size: 396*133*2 4.5 (mm)

2、Port description

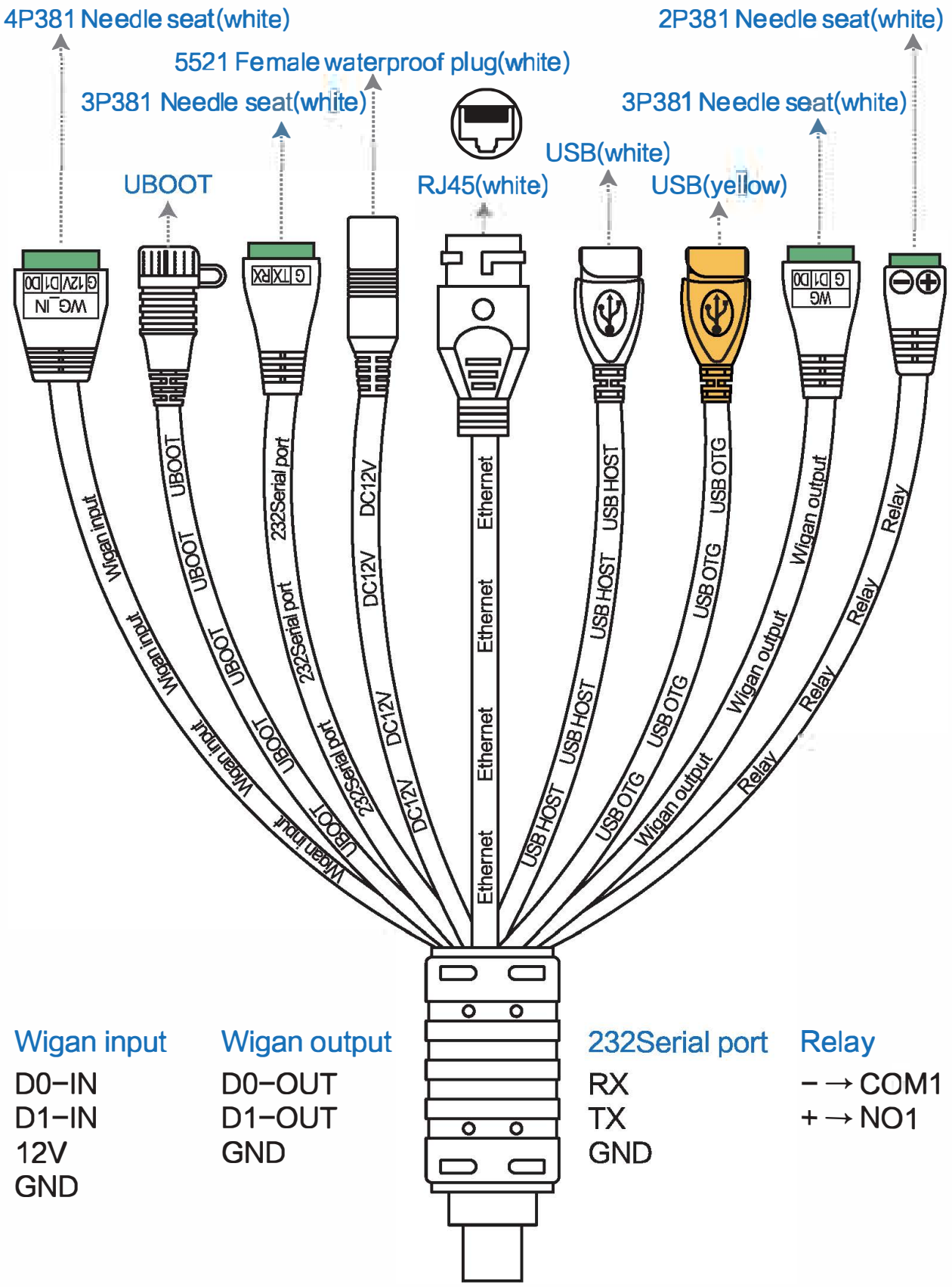

Wigan input	Wigan output	232Serial port	Relay
D0−IN	D0−OUT	RX	− → COM1
D1−IN	D1−OUT	TX	+ → NO1
12V	GND	GND	
GND			

3、 Installation method

① According to the requirements of the installation site, open a 35mm diameter hole (as shown in the figure below) in the space position of the gate (usually the middle or front side).

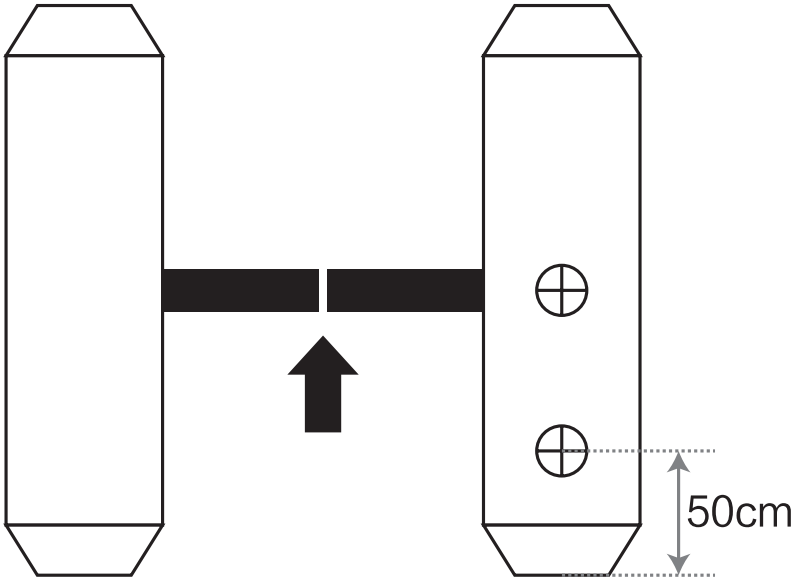

Single channel gate

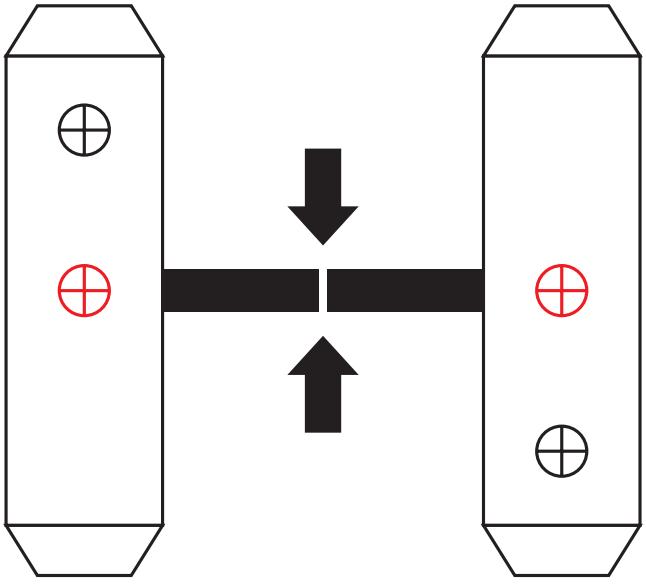

Dual-channel gate

Note: The position of the opening should be based on the actual gate type and scene, and 35mm is for reference only.

② Unscrew the nut at the bottom of the gate head post, thread the cable out of the nut, and remove the nut.

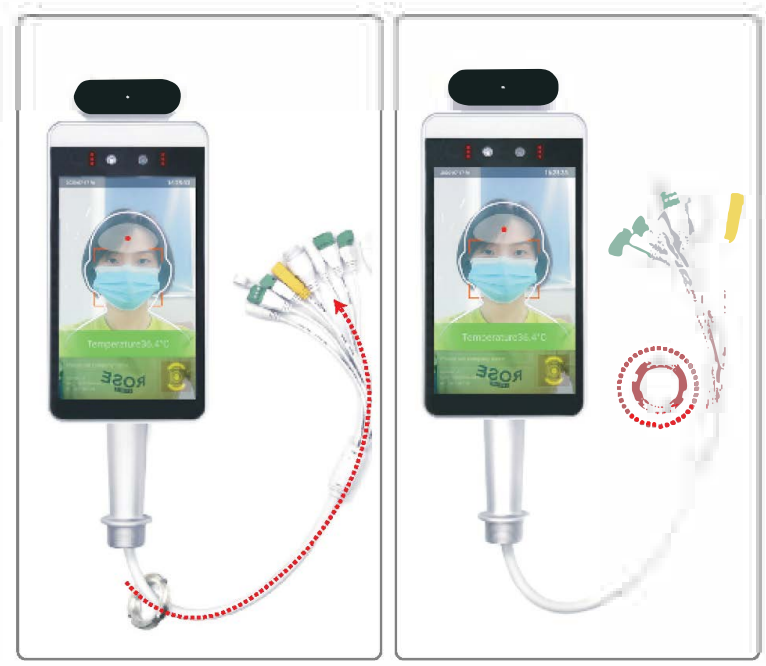

③ Under the gate, insert the cable and cable interface into the gasket and nut in turn, tighten the nut, connect the power supply, and the screen will start.

Note: The brackets in the figure above are for installation reference only, non−standard accessories.

Care and Maintenance

1. During the installation and use of the product, all electrical safety regulations must be strictly observed.

2. Please use the power adapter provided by the regular manufacturer For specific requirements of the power adapter, see the product parameter table.

3. When installing on the gate, please make sure that the product is installed firmly.

4. If the product does not work properly, please contact the after-sales service personnel. Do not disassemble or modify the product in any way (The company does not assume any responsibility for problems caused by unauthorized modification or repair.

5. Do not immerse the product in water. When the product is installed outdoors, try to use it with the rain cover provided by our company.

6. Please understand that you are responsible for properly configuring a passwords and other related product security settings, and keeping you username and password properly.

7. If the equipment does not work properly, please do not disassemble i for repair, otherwise it will affect the equipment warranty.

8. Avoid extreme or extreme environments such as extreme high temperature (or low temperature), high humidity, vibration, radiation, and chemical corrosion during installation and use.

Precautions

1.This product is not suitable for use in places exposed to direct sunlight

2.This product is not suitable for outdoor or semi-outdoor use

3.The best use environment for this product is indoor, with no wind temperature measurement distance of 50cm

4.If the ambient temperature is below 15℃ or over 30℃, the temperature measurement error will increase

5.The subject should have no strong light source directly on the forehead and face, and no other high/low heat sources interfere

6.When the tested person comes from outdoors or from a place where the temperature of the measuring environment is very different, the measured object should stay in the measuring environment for at least 5-10 minutes, and then measure the temperature after the temperature is consistent with the environment, otherwise it will affect Accuracy of test results

7.The tested object should keep the forehead dry and free from hair, dust, hats and other sundries.

8.The temperature measurement equipment cannot be promoted to the air outlet, and the hot and cold air affects the accuracy of the temperature measurement of the equipment.

9.Do not put this product close to or on high-temperature objects

10.Although the data measured by the human body infrared thermal imaging body temperature test equipment is only used for preliminary screening, it cannot be used as medical diagnosis data. Once a person with a high body temperature is found, further screening and confirmation are required

11.Calibration method 1: Before using this product for temperature screening, follow the steps below to calibrate

a)Use a traditional calibrated high-precision forehead temperature gun under the product environment to measure your forehead temperature, assuming get 36.3℃

b)Use this product to measure your own temperature in the environment where the product is used, assuming 36.0°C

c)Repeat step 1.2 more than three times to calculate the difference between the average value. If the error range between the average value measured by the forehead thermometer and the average value measured by this product is within 0.3*0, the product can be used normally. If you get a value that is too different, such as 1 redundant, you need to press and hold the middle mouse button to pop up a dialog box, enter 123456, enter the application setting, and set the compensation in the “body temperatur detection setting”.

Warranty Card

Dear customer, thank you for purchasing the Face Recognition Pass Management Module. In order to better serve you, please read, fill in and properly keep the warranty card after purchasing the product.

Your name	
Contact person	
Telephone	
Address	
Date of purchase	
Serial number	
Maintenance records	
Cause of issue	

Warranty description:

1. This warranty card is required to be properly kept by the user as a proof of repair.

2. This product is guaranteed for one year from the date of purchase.

3. Warranty Equipment During the warranty period, under normal use and maintenance conditions, the machine itself malfunctions. Upon inspection, the company will provide free repair and parts replacement.

4. During the warranty period, if the following events occur, the company has the right to refuse service or charge materials and maintenance service fees as appropriate.

1) This warranty card and valid proof of purchase cannot be provided.

2) Product failure and damage caused by improper user use.

3) Damage due to abnormal external forces.

4) It is not our maintenance service, and the user dismantles it to cause damage.

5) Failures and damage caused by natural disasters or other force majeure factors.

6) Others intentionally damaged.

5. The company reserves the right to modify and interpret all content.

FCC Statement

This equipment has been tested and found to comply with the limits for a Class B digital device, pursuant to part 15 of the FCC rules. These limits are designed to provide reasonable protection against harmful interference in a residential installation. This equipment generates, uses and can radiate radio frequency energy and, if not installed and used in accordance with the instructions, may cause harmful interference to radio communications. However, there is no guarantee that interference will not occur in a particular installation. If this equipment does cause harmful interference to radio or television reception, which can be determined by turning the equipment off and on, the user is encouraged to try to correct the interference by one or more of the following measures:

- Reorient or relocate the receiving antenna.
- Increase the separation between the equipment and receiver.
- Connect the equipment into an outlet on a circuit different from that to which the receiver is connected.
- Consult the dealer or an experienced radio/TV technician for help.

To assure continued compliance, any changes or modifications not expressly approved by the party.

Responsible for compliance could void the user's authority to operate this equipment. (Example- use only shielded interface cables when connecting to computer or peripheral devices).

This equipment complies with Part 15 of the FCC Rules. Operation is subject to the following two conditions:

(1) This device may not cause harmful interference, and

(2) This device must accept any interference received, including interference that may cause undesired operation.

FCC Radiation Exposure Statement:

The equipment complies with FCC Radiation exposure limits set forth for uncontrolled enviroment. This equipment should be installed and operated with minimum distance 20cm between the radiator and your body.