USER'S MANUAL

RetroSound®

MODERN SOUND FOR YOUR CLASSIC

www.retromanufacturing.com

TABLE OF CONTENTS

WELCOME 3
WHAT'S IN THE BOX 4
PRECAUTIONS 5
INSTALLATION INSTRUCTIONS 8
WIRING DIAGRAM 11
OPERATING YOUR RADIO 15
SYSTEM SETTINGS 17
TONE CONTROLS 20
TROUBLESHOOTING 22
FREQUENTLY ASKED QUESTIONS 23
SPECIFICATIONS 26
LIMITED WARRANTY 27
REPLACEMENT PARTS 28
FCC NOTE 29

NOTES

Copyright © 2017 Retro Manufacturing, LLC

WELCOME

General Features

- AM/FM tuner with 30 presets (12 AM and 18 FM)
- Selectable international tuner frequencies
- 18 watts RMS/40 watts peak x 4 channels
- Three EQ presets plus user-controlled bass, treble, fader, and balance adjustments
- Authentic push-button styling
- InfiniMount shaft/bracket system for maximum installation flexibility
- Compatible with all RetroSound® vehicle specific bezel, plate and knob kits
- Rear auxiliary input
- Separate power antenna and amplifier turn-on lead(s)
- Built-in Bluetooth® for hands-free calling and audio streaming

The Bluetooth® word mark and logos are owned by the Bluetooth® SIG, Inc. Any use of such marks by Retro Manufacturing, LLC are under license. Other trademarks and trade names are those of their respective owners.

The information enclosed in this user's manual is to be used as a guide to assist you with installation and operation of your radio. This guide does not cover every installation possibility, vehicle, or every aspect of the installation process.

Retro Manufacturing, LLC, RetroSound®, or its subsidiaries, assume no responsibility for any installation. This manual may be updated from time to time.

Due to continuing product improvement, specifications and features are subject to change without notice.

Visit our website for the latest updates: www.retromanufacturing.com.

The items shown below are packaged with your Motor 1B box.

Main Wiring Harness

Power and Speaker Wiring Harnesses

Motor 1B Radio Body

Metal Mounting Back Strap and Hardware

Plastic Washer Kit

InfiniMount Brackets

Bracket Mounting Hardware

The items shown below are packaged with your radio face box.

Radio Face

Radio Face Mounting Screws

Shaft Mounting Hardware

Shafts

Bluetooth® Microphone

Copyright © 2017 Retro Manufacturing, LLC

PRECAUTIONS

PLEASE OBSERVE THESE PRECAUTIONS WHEN INSTALLING AND USING THIS UNIT:

This user's manual does not cover all possible installation scenarios. If you feel you can't install this unit yourself, please take it to a local car audio professional. If you have questions about installing your radio, contact us at tech@retromanufacturing.com or call us at 888.325.1555.

- Do not disassemble or modify the unit or attempt to repair the unit yourself. If the unit needs to be repaired, consult your dealer or Retro Manufacturing directly.
- Do not use the unit when it is out of order. If the unit is out of order or is in an abnormal state (has foreign objects in it, is exposed to water, is smoking or smells), turn it off immediately and consult your dealer or Retro Manufacturing, LLC.
- Refer fuse replacement to qualified service personnel. When the fuse blows, eliminate the cause and have it replaced by a qualified service technician with the fuse prescribed for this unit. Incorrect replacement of the fuse may lead to smoke, fire and damage to the unit.
- If the unit does not turn on, check the connections first. Then check the fuse in your vehicle's fuse box and the fuse at the unit's wiring harness. Do not expose the unit to direct sunlight or excessive heat. Excessive heat will raise the interior temperature of the unit, which may damage it.
- Do not use the unit where it is exposed to moisture or dust. Exposure of the unit to moisture or dust may lead to smoke, fire or other damage to the unit and will void your warranty. Make sure the unit does not get wet in car washes or on rainy days.

- Refer wiring and installation to qualified service personnel. Installation of this unit requires special skills and experience. For maximum safety, have it installed by your dealer or qualified service professional. Retro Manufacturing is not liable for any problems resulting from installation of the unit. Please be sure to follow the instructions carefully before attempting installation.

- Follow instructions to wire the unit. Failure to follow the instructions could damage the unit, cause injury, accidents or fire.

- Be careful not to damage the leads. Prevent them from being caught in the vehicle chassis or from being damaged by screws or moving parts such as seat rails. Do not scratch, pull, bend or twist the leads. Do not install them near heat sources or place heavy objects on them. If leads must be routed around sharp metal edges, protect them by winding them with vinyl tape or similar protections.

  NOTE: cutting the main wiring harness, antenna lead or auxiliary cables will void the warranty of your radio.

- Use the designated parts and appropriate tools to install this unit. The use of parts other than those supplied may result in internal damage to the unit.

- Do not interfere with safety-related vehicle components. Do not wire or affix this unit to the fuel tank, brakes, suspension, steering wheel, pedals, etc. Check for electric wiring, piping and other items before installing the unit.

- Never install the unit in a location where it interferes with your field of vision.

Copyright © 2017 Retro Manufacturing, LLC

PRECAUTIONS

- Never splice into the power lead to supply other equipment with power.
- After installation and wiring you should check the normal operation of other electrical equipment.
- Make sure any leads do not interfere with driving or getting into and out of the vehicle.
- Insulate all exposed wires to prevent short-circuiting.
- Do not operate the unit for prolonged periods with the engine off. Operating the audio system with the engine turned off will drain the battery.
- To prevent accidents, keep the volume of your radio at a level at which you can hear outside noises such as emergency sirens and train crossing warnings. Prolonged exposure to high volume levels may result in hearing loss.
- This unit requires 12 volts to both the red and yellow power leads. The unit will not work without power to both of these leads.
- Disconnect the negative (-) battery cable before beginning installation. Verify the battery ground by checking that one wire is connected to the vehicle's starter mounting bolt or engine block and the other to the vehicle's chassis using at least 8 gauge wire. Make sure the alternator or generator connections are secure and free from corrosion, rust or dirt.
- This unit is designed for operation with a negative ground 12 volt DC battery system. Do not operate this unit with other battery systems, especially an 18 or 24 volt DC battery system or a positive ground system. If you have a 6 volt system, you need to either convert to 12 volt DC or purchase a separate inverter that would increase the voltage to 12 volts.

NOTE: The inverter needs to be rated a 10 amps or higher in order for the radio to operate properly.

STEP 1: INSTALL THE RADIO FACE

Plug the ribbon cable included with the Motor 1B body into the radio face. After plugging in the face, attach it to the body and tighten with the four radio face mounting screws provided in the radio face box (the screws are very small and are in the hardware bag with the shaft nuts).

The RetroSound® logo on the Motor 1B body should be facing upwards. Take care to not install the face to the body upside down.

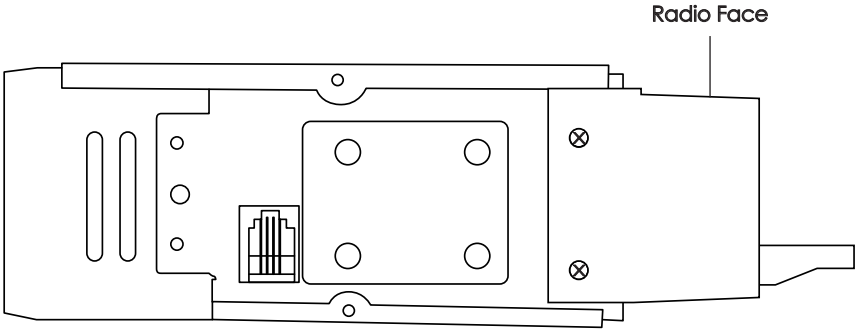

Figure 1 - Attach the Radio Face

Copyright © 2017 Retro Manufacturing, LLC

NOTE: Adjusting for a perfect fit into your dash is the most difficult portion of the installation. Patience and persistence are the keys.

The patented InfiniMount adjustable shaft system offers almost unlimited installation options to accommodate your needs.

To begin, locate the two InfiniMount radio shafts, two InfiniMount brackets, two large washers, two small washers and eight mounting screws (see "What's in the Box" on page 4).

NOTE: Each InfiniMount bracket is stamped with an insignia: when looking from the front of the radio, the bracket stamped "R" mounts to the right side of the radio and the bracket stamped "L" mounts to the left side of the radio.

STEP 2: INSTALL INFINIMOUNT BRACKETS

Attach each InfiniMount bracket to the correct matching side of the radio using the supplied screws. Before tightening the screws, you can adjust the brackets forward or backward, or you may rotate them to achieve the perfect fit. Complete the assembly with two or four screws tightened on each side.

NOTE: In some installations the brackets must be moved far enough forward or backwards that only two screws will align with the threaded openings of the radio. Two screws are sufficient to hold the brackets in place.

NOTE: You may need to cut, trim or bend the brackets to achieve a perfect fit. This will NOT void your warranty.

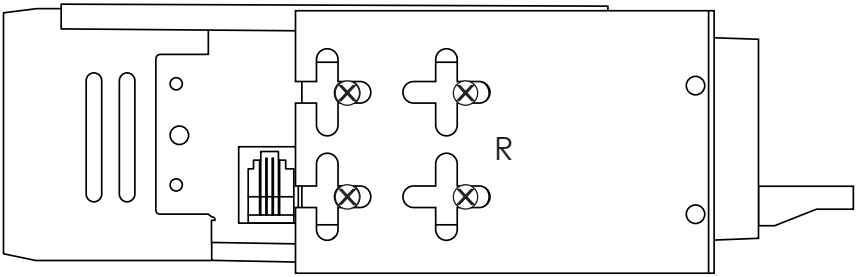

Figure 2 - Attach InfiniMount Brackets

STEP 3: MOUNT INFINIMOUNT SHAFTS TO BRACKETS

To match the location of your shafts to the proper width of your vehicle's dash, first measure the distance between your existing shaft holes from center to center.

Mount a shaft to each bracket using the supplied shaft nuts and washers. Finger tighten the shaft nuts to prepare for the final installation (see Figure 3). Once you ensure proper width, tighten the screws and nuts (DO NOT OVERTIGHTEN).

DAMAGE FROM OVERTIGHTENING WILL VOID YOUR WARRANTY.

Finally, plug the shafts into each side of the main unit (see Figure 4).

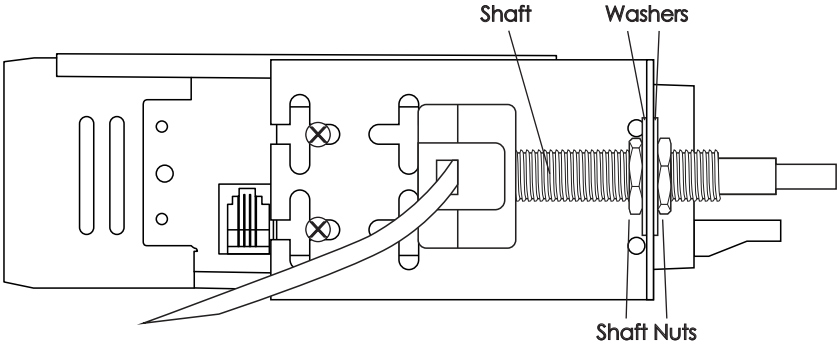

Figure 3 - Mount Shafts to Brackets

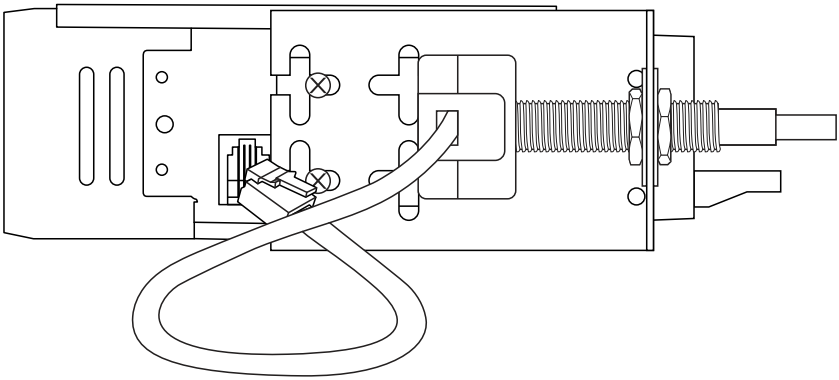

Figure 4 - Plug Shafts into the Body

Copyright © 2017 Retro Manufacturing, LLC

STEP 4: COMPLETE WIRING CONNECTIONS

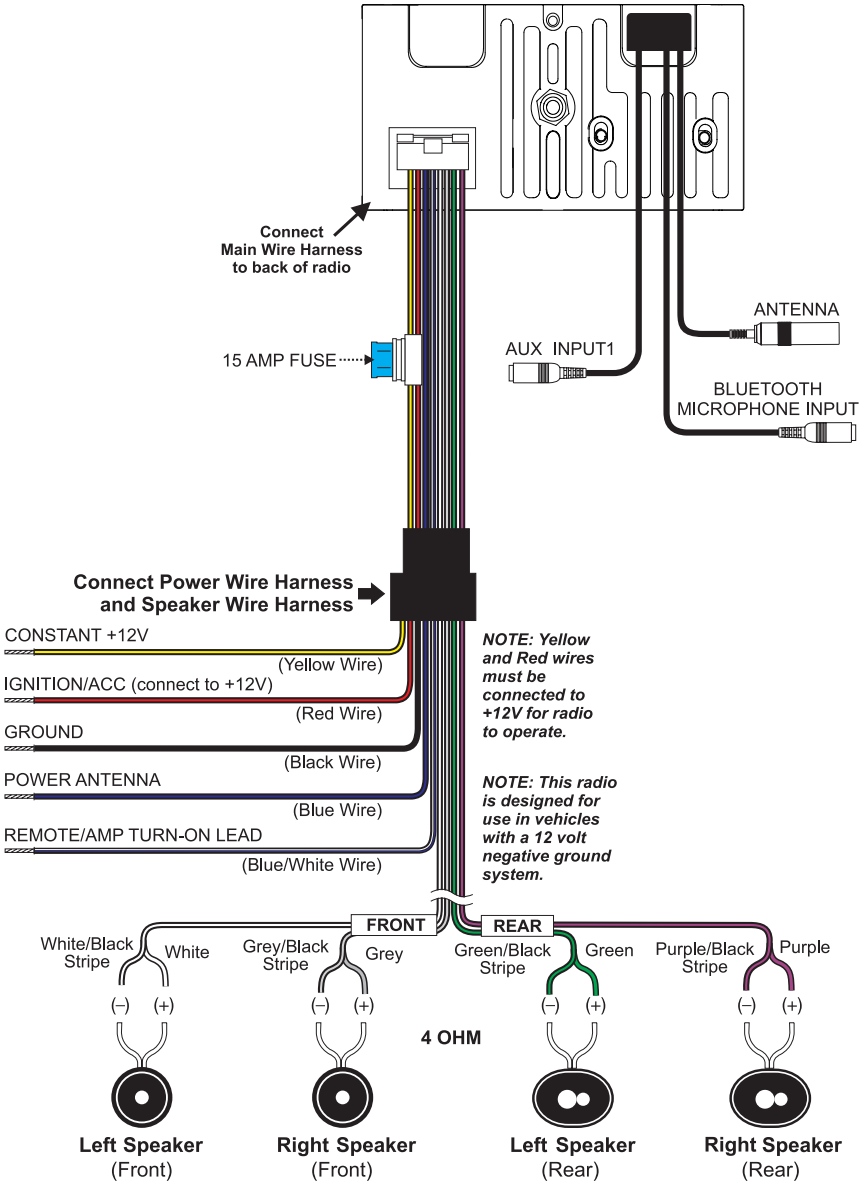

Figure 5 - Wiring Diagram

NOTE: Cutting the wiring harness, antenna lead or auxiliary cable will void the warranty of your radio.

NOTE: This unit requires +12 volts to both the red and yellow wires, otherwise it will not operate.

Locate the three wiring harnesses: Main Wiring Harness, Power Wiring Harness and Speaker Wiring Harness (see "What's in the Box" on page 4). First connect the Main Wiring Harness to the back of the radio. Then connect both the Power and Speaker Wiring harnesses to the black female plug of the Main Wiring Harness.

After doing this, connect the bare wire ends of your power and speaker wires to the appropriate power and speaker locations in your vehicle (see Figure 5). Have your radio installed by a professional if this part of the install is too difficult, or contact us if you have questions.

Installation Notes

- To prevent damage to the unit, do not connect the power connector until you have completed the wiring process.
- This is a 12 volt negative-ground ONLY radio. If you have a positive ground, or a 6-volt system, you need to either convert to 12 volts or purchase a separate inverter that would step up the voltage to 12 volts.
- Please note that the inverter must be rated at 10 amps or higher in order for the radio to operate properly.

Rear AUX Input

The rear auxiliary input allows you to listen to any portable device with standard 1/8" (3.5mm) headphone outputs. An example of an external source would be a MP3 player, iPod® or iPhone®, portable CD player or portable satellite radio receiver. To use this input, the auxiliary cable must be routed to an accessible area during installation.

Copyright © 2017 Retro Manufacturing, LLC

STEP 5: FINISH THE INSTALLATION

The RetroSound® Motor 1B is a universal radio solution designed to fit most classic vehicles. The display face of your radio measures 3.5 inches wide by 1.5 inches high, which will be smaller than the original radio opening in most vehicles. We manufacture a wide variety of mounting bezels and faceplates to fill the remaining space and finish the installation.

IF USING A BEZEL, Place the bezel over the face of the radio, then install the assembled radio from behind the dash until the bezel and radio face are flush with the front of the dash and the radio shafts protrude through the shaft openings in the dash. Using the supplied washers and shaft nuts (see "What's In the Box" on page 4), mount the radio to the dash, then secure it using the included back strap.

IF USING A FACEPLATE, slide the radio into the opening from behind the dash, then align the faceplate over the radio shafts from the front. The radio face should align flush with the faceplate, and the shafts should not stick out too far. If it doesn't look correct, revisit the previous steps to adjust as necessary. Once the radio and faceplate are in place, use the supplied washers and shaft nuts (see "What's In the Box" on page 4) to secure the faceplate to the dash and the radio (DO NOT OVERTIGHTEN).

Above: example of a bezel

Above: example of a faceplate

Next, you'll need to secure the rear of the radio using the supplied back strap and hardware (see "What's in the Box" on page 4). The back strap mounts using the threads in the rear of the radio body and can be bent and adjusted to align with the mounting point of the original factory radio behind the dash.

THE SHAFTS ARE NOT STRONG ENOUGH TO SUPPORT THE WEIGHT OF THE RADIO. FAILURE TO SECURE THE RADIO WITH THE BACK STRAP CAN DAMAGE YOUR SHAFTS AND WILL VOID YOUR WARRANTY.

Finally, slide the rear knobs over the shafts, rotating them into the correct position, and push them into place. Mount the front knobs by gently pressing them onto the shaft.

DO NOT PRESS TOO HARD. PRESSING TOO HARD CAN DAMAGE YOUR SHAFTS AND WILL VOID YOUR WARRANTY.

Figure 6 - Installing the Back strap

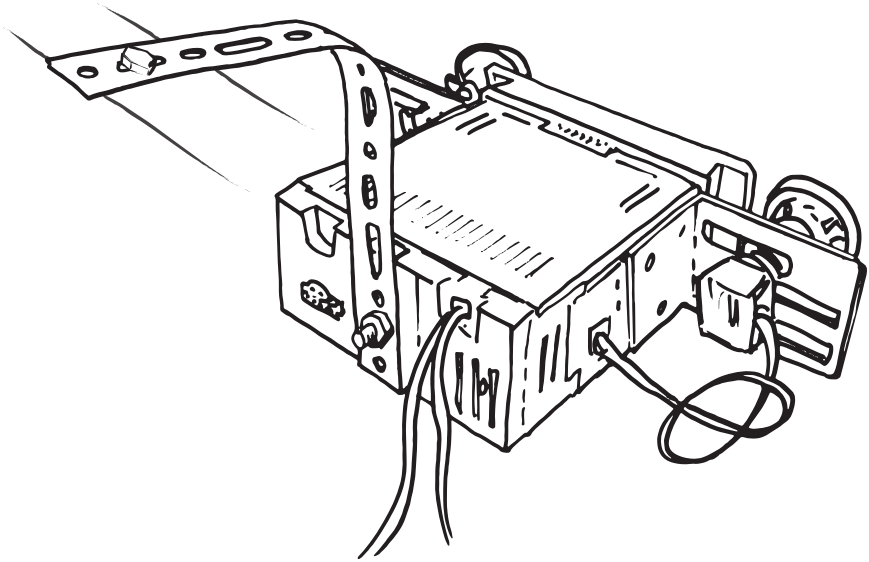

View from behind dash

Copyright © 2017 Retro Manufacturing, LLC

Front Panel Controls

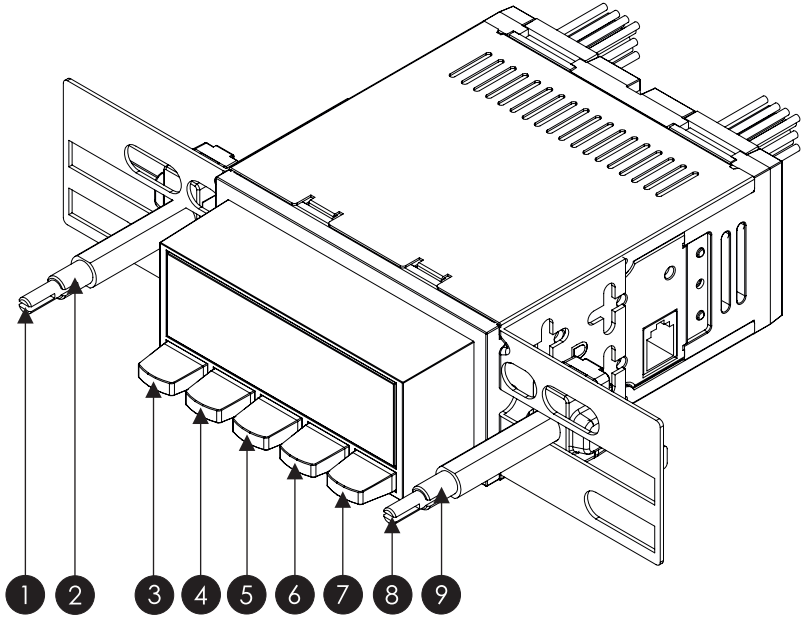

Figure 7 - Front Panel Controls

1. Front Left Knob
2. Rear Left Knob
3. AM/FM Pre-Sets
4. AM/FM Pre-Sets
5. AM/FM Pre-Sets
6. AM/FM Pre-Sets
7. AM/FM Pre-Sets
8. Front Right Knob
9. Rear Right Knob

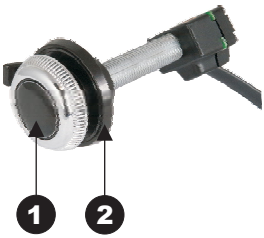

Figure 8 - Left Shaft with Knobs

Power On/Off

Press the left-front knob (#1) to turn the unit on.
RETROSOUND will appear on the screen.

Press and hold the left-front knob (#1) to turn the unit off.
GOODBYE will appear on the screen to confirm that it has turned off.

Volume

Rotate the left-front knob (#1) to adjust the volume between 0-46 (minimum-maximum).

Mode

Rotate the left-rear knob (#2) clockwise to select from available listening sources: RADIO, AUX. Bluetooth. The auxiliary input (AUX) is located at the back of the radio body. The auxiliary input may be used to play music from any portable device with a standard headphone output, such as a MP3 player, iPod® or iPhone®, portable CD player or portable satellite radio receiver. To use this input, the auxiliary cable must be routed to an accessible area during installation.

Radio Tuning

Rotate the right-front knob (#8) to tune to the next or previous AM/FM frequency.

NOTE: When the radio is tuned to a strong FM station, the stereo indicator will appear on the upper right corner of the LCD display (two oval circles).

Radio Bands

Rotate the right-rear knob (#9) counter-clockwise to toggle through the five radio bands (two AM and three FM).

Copyright © 2017 Retro Manufacturing, LLC

Storing Radio Pre-sets

There are six radio pre-sets for each radio band. For pre-sets one through five, tune to the desired radio station and then press and hold the push-button (#3-7) to store into memory. To store pre-set number six, turn the right-rear knob (#9) clockwise to select pre-set number six, then turn and hold right-rear knob clockwise to store.

Selecting Radio Pre-sets

To recall radio pre-sets, press the appropriate pre-set button (#3-7) in the selected radio band. To recall pre-set six, turn the right-rear knob (#9) clockwise and release it.

Mute

Press the right-front knob (#8) to activate the mute function.

SYSTEM SETTINGS

The System Settings sub-menu system enables access to the numerous additional features of your RetroSound® radio. Press and hold the right-front knob (#8) for three seconds to access the sub-menu system. Then repeatedly press the right-front knob (#8) to cycle through the available sub-menu options. Once in a specific sub-menu, rotate the right-front knob either clockwise or counter-clockwise to change options.

Auto Seek/Manual

This sub-menu toggles either AUTO SEEK or MANUAL tuning. In Auto Seek mode the radio will tune to the next available station when tuning.

A Store

This sub-menu will automatically fill FM pre-sets on all three FM bands of six pre-sets each (eighteen total pre-sets) with the strongest stations. To activate this feature, rotate the right-front knob (#8) until A STORE appears on the screen, then press the left-front knob (#1) to activate. This process can take up to one minute.

Local/Distant

This sub-menu changes the sensitivity of the FM tuner. When listening to the FM tuner, selecting between LOCAL and DISTANT can aid in listening to weak FM stations or compensate for stations that have too strong a signal.

Clock

This sub-menu sets the clock. To adjust hours, turn the right-front knob (#8) clockwise. Adjusting past 12 will toggle the AM/PM indications. Once the hour is set, press the right-front knob (#8) to adjust minutes. Once minutes are set, press the right-front knob (#8) to access the 12/24 menu.

Clock 12/24

This sub-menu toggles the clock from a twelve hour clock to a twenty-four hour clock. The factory default setting is for a twelve hour clock (CLK 12).

Display Frequency/Clock

This sub-menu toggles the priority screen view between radio frequency (DISP FREQ) and clock (CLK).

Clock ON/OFF

This sub-menu toggles off the clock when the radio is turned off. Default is CLK ON.

Copyright © 2017 Retro Manufacturing, LLC

Beep On/Off

This sub-menu toggles the audible beep confirmation that sounds during operation of the radio. Select BEEP ON to hear the audible beep, and BEEP OFF to disable the audible beep.

Dimmer High/Low

This sub-menu adjusts the radio's display brightness between high (DIMM HIGH) and low (DIMM LOW).

Area USA/EUR/AUS/JAP/RUS

The RetroSound® Motor 1B has the capability to receive radio broadcasts from around the world. This sub-menu allows you to adjust to broadcasts in your county. Factory default setting is United States (USA). Turn the right-front knob (#8) to toggle between Europe (EUR), Australia (AUS), Japan (JAP) and Russia (RUS). To confirm the change, simply let the sub-menu time out, and it will revert back to your tuner.

Volume Last/Adjust

This sub-menu adjusts the volume level at which the radio will turn on. The factory default setting is VOL LAST, which means the radio turns on at the volume level at which the radio was turned off. VOL ADJUST allows you to pre-set the volume level at which the radio turns on from 0-46, regardless of the volume level at which the radio was turned off (see "Volume on" page 15).

TONE CONTROLS

This sub-menu enables adjustments to bass and treble tone controls, balance and fader controls and the three pre-set equalizer options. To access the this sub-menu, press the left-front knob (#1). Repeatedly press the left-front knob to scroll through the available options. To adjust within the sub-menu, turn the left-front knob clockwise or counter-clockwise.

Digital Signal Processor (DSP)

This sub-menu toggles the Digital Signal Processor (DSP) on and off. Factory default is DSP OFF. When activated, you may then select one of three pre-set equalization settings:

- CLASSIC This setting offers subtle sonic adjustments that lend themselves to classical music.
- POP This setting accentuates bass and treble frequencies and is suitable for popular music.
- ROCK This setting accentuates treble frequencies and is suitable for rock music.

Bass

This sub-menu (BASS) adjusts bass settings. You may boost or cut low frequencies from +7 to -7.

Treble

This sub-menu (TREBLE) adjusts treble settings. You may boost or cut high frequencies from +7 to -7.

Copyright © 2017 Retro Manufacturing, LLC

Balance

This sub-menu (BAL) adjusts stereo sound from to left or right. This may be helpful in compensating for the position of the driver in relation to the vehicle's speakers. Adjustment range is from 0-12 between left and right speakers.

Fader

This sub-menu (FADER) adjusts the sound between the front and rear speakers. Adjustment range is from 0-12 between front and rear speakers.

Bluetooth® On/Off (BT)

This sub-menu turns Bluetooth® on or off. Bluetooth® must be enabled in order to connect a Bluetooth® device for hands-free operation or streaming audio.

Bluetooth® Connect/Disconnect

This sub-menu allows the radio to be discoverable on your Bluetooth® device. Choose BT CONNEC to allow your device to connect, and BT DISCON to disable Bluetooth® connections.

To connect your device, choose BT CONNEC, then search for "RETROSOUND" in your phone's Bluetooth® device list.
Enter password "0000" if prompted.

Problem	Possible Cause	Action to Solve Problem
Radio will not turn on (no lights, no sound)	Constant +12V (yellow) wire not connected or incorrect voltage	Check all connections for proper voltage with a volt meter. Voltage range: 12-15 volts
	+12V ignition/accessory (red) wire not connected or incorrect voltage	Check +12V accessory (red) wire connection
	Ground (black) wire not connected	Check ground connection
	Fuse on constant 12V (yellow) wire is blown	Replace blown fuse
No sound heard from unit but unit lights up	Volume turned all the way down	Increase radio volume
	Internal amp in protection mode	Check speaker leads for any grounded or shorted wires
	Wrong source mode selected	Make sure the unit is in the desired source mode (RADIO,AUX)
Unit blows fuses	Possible short in wiring	Incorrect fuse used, make sure only fuses with correct 15 amp ratings are used and check all wiring connections for possible short
	Battery hooked up backwards	Make sure battery is properly connected

System Reset

To restore/reset the unit to factory defaults, remove all power from the unit, wait 5 minutes and then reconnect power.

Copyright © 2017 Retro Manufacturing, LLC

Do your radios work on 6 volt systems or on positive ground systems?

No. Our radios are 12 volt, negative ground only. After-market converters and inverters are available but must have at least 10 amps of continuous output.

I'm having problems getting the radio to turn on.

RetroSound® radios require 12 volts to both power leads. The red lead (+12 volt accessory) goes to a switched power source, and the yellow to a constant +12 volt power source. Using a volt meter, check the voltage when the key is turned from "off" to "on". If there is a significant drop in the voltage, the circuit to which you have the yellow lead attached cannot handle the additional draw of the radio. You will need to find another circuit that can handle the additional draw of the radio, or you will need to go directly to the battery.

What speaker wire do you recommend I use?

We recommend using 16 gauge wire for the speakers.

I have all 4 speakers connected to your radio and the display is lit up like it is working, but there's no sound coming out.

This usually indicates one of two things:

- Speaker wires touching each other or the vehicle chassis at some point. Check each speaker lead from radio to speaker.
- Speaker impedance below 4 ohms. Older speakers are usually not compatible with modern electronics.

My car originally came with a switch to control my automatic antenna. Can I use the RetroSound® radio's remote antenna wire to control my antenna?

No you cannot. Your factory antenna is known as "semi-automatic." It requires a switch to either extend or retract the antenna. You must retain this switch to control your antenna; the RetroSound® radio's power antenna wire is for more modern "fully-automatic" antennas not requiring a separate switch.

The sound output is all mid-range, with very little bass and a strangled-sounding upper range. What is wrong?

One of your speaker wires is connected backwards. This is called being "out of phase." Check to make sure positive is wired to positive and negative to negative on all your speakers.

Will cutting or bending the InfiniMount brackets void the warranty or harm the unit?

No. The RetroSound® patented InfiniMount bracket system has been designed specifically to be bent, cut and modified to simplify radio installation. Modification to the radio's brackets is actually encouraged to ensure proper fit.

If you have questions about modifying the bracket system, contact us at tech@retromanufacturing.com or call us at 888.325.1555.

How much should I tighten the shaft nuts when installing the brackets and mounting the radio to the dash?

DO NOT OVERTIGHTEN the shaft nuts. The shaft nuts are **NOT** the only means of securing the radio to the dash. There is a back strap included which works with the shaft nuts to secure the radio to the dash. Please note that overtightening the shaft nuts could break the shafts. Retro Manufacturing, LLC will not be responsible for broken shafts due to overtightening the shaft nuts.

Copyright © 2017 Retro Manufacturing, LLC

I have your radio with an amp connected, but hear a whining/buzzing sound through the speakers when I step on the accelerator.

If you have an external amplifier installed and experience a high-pitched noise that varies with the engine's RPM, there are many possible solutions:

- Make sure the amplifier's gain controls are not turned all the way up. Amplifiers amplify everything, including noise.
- Try grounding the amplifier near where it is installed.
- Try a filter on the amplifier's 12 volt power lead. Make sure to use a filter that includes a ground wire.
- On rare occasions, noise can be introduced through the antenna lead. If disconnecting the antenna makes the noise go away, you need to replace or repair the antenna plug where it goes into the radio.

FM

Tuning Range (USA, EUR, AUS, JAP, RUS tuning capable)	87.5-107.9MHz
Antenna Terminal	External Antenna Connector
Usable Sensitivity	12.5 dBf
Selectivity	75 dB @ 400kHz
Signal to Noise Ratio	62 dB (Stereo), 67 dB (Mono)
Harmonic Distortion @ 1 kHz	0.8% (Stereo), 0.5% (Mono)
Separation	32 dB @ 1kHz
Frequency Response	30-16,000 Hz

AM

Tuning Range (USA, EUR, AUS, JAP, RUS tuning capable)	530-1710 kHz
Antenna Terminal	External Antenna Connector

GENERAL

Dimensions (radio face)	3.5"W x 1.5" H x 1.05" D
Dimensions (radio body)	3.96"W x 1.98"H x 4.30"D
Power Requirements	11.5-14.4V
Current Consumption (during operation)	Max. 15A
Current Consumption (car off)	<3.5 mA
Output Power (@ 14.4 volts @ 4 ohm @ 1% THD)	18x4w RMS 40x4 Max Power
Output Impedance	4-8ohm
AUX Input (aux cable length, 8")	≥300 mV / 6 kΩ

NOTE: All specifications are subject to change without notice.

Copyright © 2017 Retro Manufacturing, LLC

LIMITED WARRANTY

If your unit does not work properly because of defects in materials and workmanship, Retro Manufacturing, LLC (collectively referred to as "the warranter") will for the length of the period indicated in the chart below at its option either (a) repair your unit with new or refurbished parts, or (b) replace it with a new or refurbished unit. The warranty period starts with the date of original purchase. The decision to repair or replace will be made by the warranter.

CATEGORIES	PARTS
Motor 1B Radio	One (1) Year

During the "Parts" warranty period, there will be no charge for parts. You must mail in your unit prepaid during the warranty period. If batteries are included, they are not warranted. This warranty only applies to products purchased and serviced in the United States or Puerto Rico. This warranty is extended only to the original purchaser of a new product which was not sold "as is." A purchase receipt or other proof of the original purchase date is required for warranty service.

To handle a warranty issue, contact us at tech@retromanufacturing.com or 888.325.1555 for a Return Authorization (RA) number. All returns and warranty issues must be accompanied by a Return Authorization number. Any product received without a RA number will be refused.

LIMITED WARRANTY-LIMITS AND EXCLUSIONS

This warranty ONLY COVERS failures due to defects in materials and workmanship, and DOES NOT COVER normal wear and tear or cosmetic damage. The warranty ALSO DOES NOT COVER damages which occurred during shipment, failures which are caused by products not supplied by the warranter, failures which result from accident, misuse, abuse, neglect, bug infestation, mishandling, misapplication, alteration, faulty installation, set-up adjustment, maladjustment of consumer control, improper maintenance, improper antenna, inadequate signal reception or pickup, power line surge, improper voltage supply, lightning, modification, commercial use (such as use in hotels, offices, restaurants, or other business uses) or rental use of the product, or service by anyone other than Retro Manufacturing, LLC, or damage that is attributable to acts of God.

THERE ARE NO EXPRESS WARRANTIES EXCEPT AS LISTED UNDER "LIMITED WARRANTY". THE WARRANTER IS NOT LIABLE FOR INCIDENTAL OR CONSEQUENTIAL DAMAGES RESULTING FROM THE USE OF THIS UNIT, OR ARISING OUT OF ANY BREACH OF THIS WARRANTY. (As examples, this excludes damages for lost time, cost of having someone remove or re-install an installed unit if applicable, travel to and from the servicer, and loss of media, data or other memory contents. The items listed are not exclusive, but are for illustration only.) ALL EXPRESS AND IMPLIED WARRANTIES, INCLUDING THE WARRANTY OF MERCHANTABILITY, ARE LIMITED TO THE PERIOD OF THE LIMITED WARRANTY.

Some states do not allow the exclusion or limitation of incidental or consequential damages, or limitations on how long an implied warranty lasts, so the exclusions may not apply to you. This warranty gives you specific legal rights and you may also have other rights which vary from state to state. If a problem with this unit develops during or after the warranty period, you may contact your dealer or Retro Manufacturing, LLC.

If you need replacement parts, visit our website or contact us by calling 888.325.1555 or sending an email to tech@retromanufacturing.com (see "What's in the Box" on page 4 to confirm the part(s) needed).

NOTE: If you return a radio to us for credit, any missing parts will be debited.

Items

- Main Wiring Harness
- Power Wiring Harness
- Speaker Wiring Harness
- Metal Back Strap
- Metal Hardware Pack
- Plastic Washer Kit
- InfiniMount Shaft
- InfiniMount Brackets (pair)

PURCHASE NOTES

Record the place and date of purchase for future reference.

Model No._____

Serial No._____

Purchase Date_____

Purchased From_____

Keep this information and your sales receipt in a safe place.

Copyright © 2017 Retro Manufacturing, LLC

FCC NOTES

(1) This device complies with part 15 of the FCC Rules. Operation is subject to the following two conditions: (1) This device may not cause harmful interference, and (2) this device must accept any interference received, including interference that may cause undesired operation.
(2)changes or modifications not expressly approved by the party responsible for compliance could void the user's authority to operate the equipment.
(3)This equipment has been tested and found to comply with the limits for a Class B digital device, pursuant to part 15 of the FCC Rules. These limits are designed to provide reasonable protection against harmful interference in a residential installation. This equipment generates, uses and can radiate radio frequency energy and, if not installed and used in accordance with the instructions, may cause harmful interference to radio communications. However, there is no guarantee that interference will not occur in a particular installation. If this equipment does cause harmful interference to radio or television reception, which can be determined by turning the equipment off and on, the user is encouraged to try to correct the interference by one or more of the following measures:
—Reorient or relocate the receiving antenna.
—Increase the separation between the equipment and receiver.
—Connect the equipment into an outlet on a circuit different from that to which the receiver is connected.
—Consult the dealer or an experienced radio/TV technician for help.
(4)The equipment should be installed and operated with minimum distance 20cm between the radiator & your body.

Retro®
MANUFACTURING

MODERN SOUND FOR YOUR CLASSIC

Retro Manufacturing, LLC, 7470 Commercial Way, Henderson, NV 89011
p) 888.325.1555 | f) 702.483.2229 | www.retromanufacturing.com