USER'S MANUAL

TABLE OF CONTENTS

WELCOME 3

WHAT'S IN THE BOX 4

PRECAUTIONS 5

INSTALLATION INSTRUCTIONS 8

WIRING DIAGRAM 11

OPERATING YOUR RADIO

- BASIC OPERATION 15
- TONE CONTROLS 18
- SYSTEM SETTINGS 19
- USB DEVICE INSTRUCTIONS 23
- BLUETOOTH® INSTRUCTIONS 26

TROUBLESHOOTING 28

FREQUENTLY ASKED QUESTIONS 29

SPECIFICATIONS 32

LIMITED WARRANTY 33

REPLACEMENT PARTS 34

FCC NOTES 35

INSTALLATION NOTES 36

NOTES

Copyright © 2018 Retro Manufacturing, LLC

WELCOME

Thank you for purchasing a RetroSound® radio. RetroSound® radios combine classic styling with the advanced features you expect from a modern car stereo. Your RetroSound® radio consists of two main parts: the radio face and the Motor 2B body.

General Features

- Built-in Bluetooth® for hands-free calling and audio streaming
- Plays MP3 and WMA files via USB input
- Selectable 32,000 color LCD illumination with user presets
- AM/FM tuner with 30 presets
- Plays MP3, WMA and FLAC files via USB inputs
- Selectable international tuner frequencies
- Built-in amplifier (25 watts RMS/45 watts peak x 4 channels)
- 3 EQ presets plus user-controlled bass, mid-range, treble, fader, and balance adjustment
- InfiniMount shaft/bracket system for maximum installation flexibility
- Available with period-correct knobs, bezel and/or faceplate
- Inputs: 1 rear-mounted standard USB port
- Outputs: 4-channel pre-amp outputs (front, rear, subwoofer)
- Separate power antenna and amplifier turn-on lead(s)
- 1 year parts and labor warranty

The Bluetooth® word mark and logos are owned by the Bluetooth® SIG, Inc.
Any use of such marks by Retro Manufacturing, LLC are under license.
Other trademarks and trade names are those of their respective owners.

The information enclosed in this user's manual is to be used as a guide to assist you with installation and operation of your radio. This guide does not cover every installation possibility, vehicle, or every aspect of the installation process.

Retro Manufacturing, LLC, RetroSound®, or its subsidiaries, assume no responsibility for any installation. This manual may be updated from time to time.

Due to continuing product improvement, specifications and features are subject to change without notice.

Visit our website for the latest updates: www.retromanufacturing.com.

The items shown below are packaged with your Motor 2B box.

Main Wiring Harness

Power and Speaker Wiring Harnesses

Motor 2B Radio Body

Bluetooth® Microphone

Metal Mounting Back Strap and Hardware

Plastic Washer Kit

InfiniMount Brackets

Bracket Mounting Hardware

The items shown below are packaged with your radio face box.

Radio Face

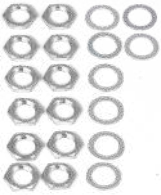

Shaft Mounting Hardware

Shafts

Radio Face Mounting Screws

Copyright © 2018 Retro Manufacturing, LLC

PLEASE OBSERVE THESE PRECAUTIONS WHEN INSTALLING AND USING THIS UNIT:

This user's manual does not cover all possible installation scenarios. If you feel you can't install this unit yourself, take it to a local car audio professional. If you have questions about installing your radio, email us at tech@retromanufacturing.com or call us at 888.325.1555.

- Do not disassemble or modify the unit or attempt to repair the unit yourself. If the unit needs to be repaired, consult your dealer or Retro Manufacturing, LLC.
- Do not use the unit when it is out of order. If the unit is out of order or is in an abnormal state (has foreign objects in it, is exposed to water, is smoking or smells), turn it off immediately and consult your dealer or Retro Manufacturing, LLC.
- Refer fuse replacement to qualified service personnel. When the fuse blows, eliminate the cause and have it replaced by a qualified service technician with the fuse prescribed for this unit. Incorrect replacement of the fuse may lead to smoke, fire and damage to the unit.
- If the unit does not turn on, check the connections first. Then check the fuse in your vehicle's fuse box and the fuse at the unit's wiring harness. Do not expose the unit to direct sunlight or excessive heat. Excessive heat will raise the interior temperature of the unit, which may damage it.
- Do not use the unit where it is exposed to moisture or dust. Exposure of the unit to moisture or dust may lead to smoke, fire or other damage to the unit and will void your warranty. Make sure the unit does not get wet in car washes or on rainy days.

- Refer wiring and installation to qualified service personnel. Installation of this unit requires special skills and experience. For maximum safety, have it installed by your dealer or qualified service professional. Retro Manufacturing, LLC is not liable for any problems resulting from improper installation of the unit. Please be sure to follow the instructions carefully while attempting installation.

- Follow instructions to wire the unit. Failure to follow the instructions could cause damage to the unit, fire, injury or death.

- Be careful not to damage the leads. Prevent them from being caught in the vehicle chassis or from being damaged by screws or moving parts such as seat rails. Do not scratch, pull, bend or twist the leads. Do not install them near heat sources or place heavy objects on them. If leads must be routed around sharp metal edges, protect them by wrapping them with vinyl tape or similar protections.

  NOTE: Cutting the main wiring harness, antenna lead, USB cable cables will void the warranty of your radio.

- Use the designated parts and appropriate tools to install this unit. The use of parts other than those supplied may result in internal damage to the unit.

- Do not interfere with safety-related vehicle components. Do not wire or affix this unit to the fuel tank, brakes, suspension, steering wheel, pedals, etc. Check for electric wiring, piping and other items before installing the unit.

- Never install the unit in a location where it interferes with your field of vision.

Copyright © 2018 Retro Manufacturing, LLC

PRECAUTIONS

- Never splice into the power lead to supply other equipment with power.
- After installation and wiring, always check the normal operation of other electrical equipment.
- Make sure that no wires interfere with driving or getting in and out of the vehicle.
- Insulate all exposed wires to prevent short-circuiting or electric shock.
- Do not operate the unit for prolonged periods with the engine off. Prolonged operation with the engine turned off will drain the battery.
- To prevent accidents, keep the volume of your radio at a level that allows you to hear outside noises such as emergency sirens and train crossing warnings. Prolonged exposure to high volume levels may also result in hearing loss.
- This unit requires 12 volts to both the red and yellow power leads. The unit will not work without power to both of these leads.
- Disconnect the negative (-) battery cable before beginning installation. Verify the battery ground by checking that one wire is connected to the vehicle's starter mounting bolt or engine block and the other to the vehicle's chassis using at least 8 gauge wire. Make sure the alternator or generator connections are secure and free from corrosion, rust or dirt.
- This unit is designed for operation with a negative ground 12 volt DC battery system. Do not operate this unit with other battery systems, especially an 18 or 24 volt DC or a positive ground system. If you have a 6 volt system, you need to either convert to 12 volt DC or purchase a separate inverter that would increase the voltage to 12 volts.

NOTE: The inverter needs to be rated at 8 amps or higher in order for the radio to operate properly.

STEP 1: Install the Radio Face

Plug the ribbon cable included with the Motor 2B body into the radio face. After plugging in the face, attach it to the body and tighten with the four radio face mounting screws provided in the radio face box (the screws are very small and are in the hardware bag with the shaft nuts).

The RetroSound® logo on the Motor 2B body should be facing upwards. Take care to not install the face to the body upside down.

NOTE: Optionally, the radio face can be mounted remotely up to nine feet away from the Motor 2B body using an optional Face to Body Extension Cable. In some installation applications, a bracket can be used to mount the face to the body at an angle.

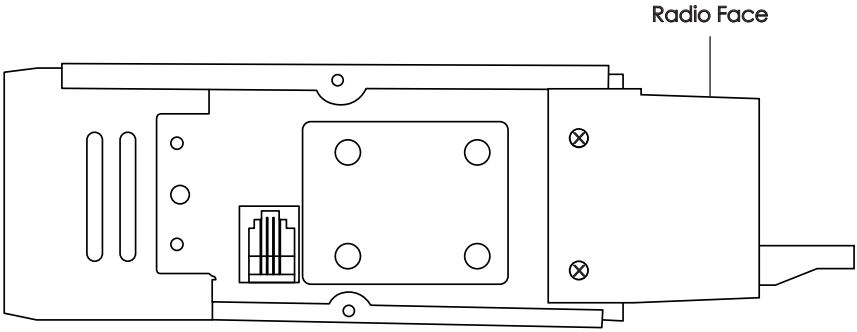

Figure 1 - Attach the Radio Face

Copyright © 2018 Retro Manufacturing, LLC

STEP 2: Install InfiniMount Brackets

Attach each InfiniMount bracket to the correct side of the radio using the supplied screws. Before tightening the screws, you need to adjust the brackets up, down, forward or backward. You may also rotate, cut, or bend the brackets to achieve the perfect fit (see Figure 2). Complete the assembly with at least two screws tightened on each side.

NOTE: In some installations the brackets must be moved far enough forward or backwards or rotated so that only two screws will align with the threaded screw holes on the radio. Two screws are sufficient to hold the brackets in place.

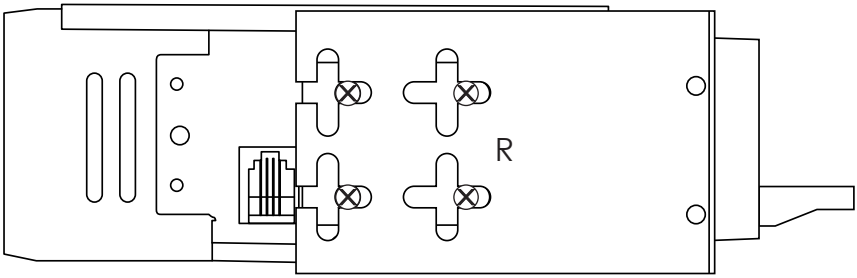

Figure 2 - Attach InfiniMount Brackets

NOTE: You may need to cut, trim or bend the brackets to achieve a perfect fit. You can even drill new mounting holes into the bracket if you need to. The InfiniMount system is designed to be modified. Modifying your brackets will NOT void your warranty.

STEP 3: Mount Shafts to Brackets

To match the location of your shafts to the proper width of your vehicle's dash, first measure the distance between your existing shaft holes from center to center.

Mount a shaft to each bracket using the supplied shaft nuts and washers. Finger tighten the shaft nuts to prepare for the final installation (see Figure 3). Once you ensure proper width, tighten the screws and nuts (DO NOT OVERTIGHTEN).

DAMAGE FROM OVERTIGHTENING WILL VOID YOUR WARRANTY.

Finally, plug the shafts into each side of the main unit (See Figure 4).

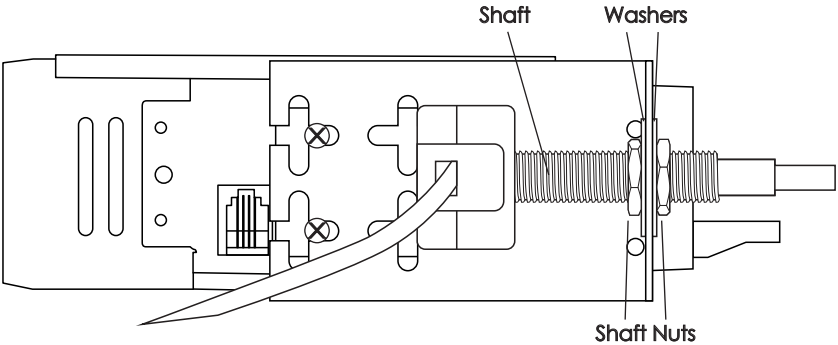

Figure 3 - Mount Shafts to Brackets

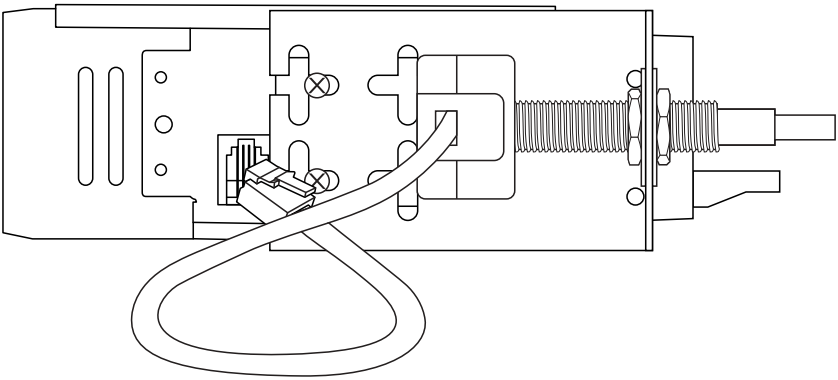

Figure 4 - Plug Shafts into the Body

Copyright © 2018 Retro Manufacturing, LLC

STEP 4: Complete Wiring Connections

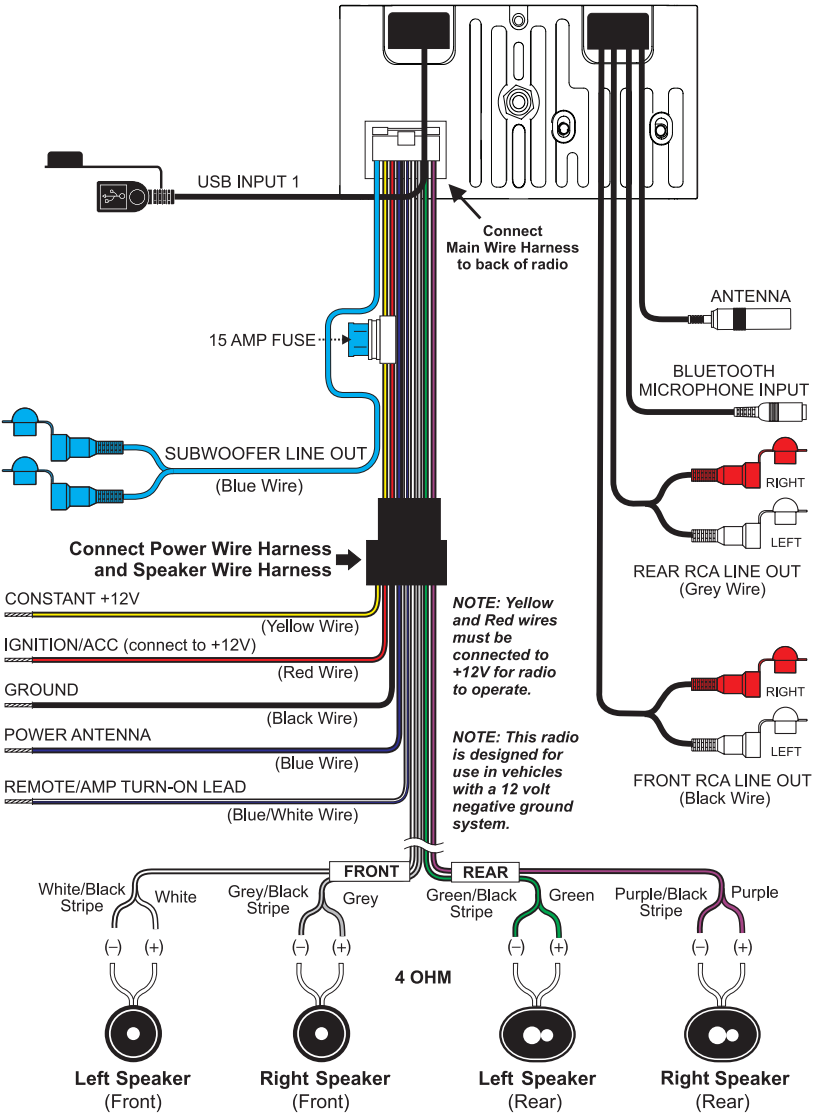

Figure 5 - Wiring Diagram

NOTE: Cutting the wiring harness, antenna lead will void your warranty.

NOTE: This unit requires +12 volts to both the red and yellow wires to operate properly.

Locate the three wiring harnesses: main wiring harness, power wiring harness and speaker wiring harness (see "What's in the Box" on page 4). First connect the main wiring harness to the back of the radio. Then connect both the power and speaker Wiring Harnesses to the black female plug of the main wiring harness.

After doing this, connect the bare wire ends of your power and speaker wires to the appropriate power and speaker locations in your vehicle (see Figure 5). Have your radio installed by a professional if this part of the install is too difficult, or contact us if you have questions.

Installation Notes

- To prevent damage to the unit, do not connect the power connector until you have completed the wiring process.
- This is a 12 volt negative ground ONLY radio. If you have a positive ground, or a 6 volt system, you need to either convert to 12 volts or purchase a separate inverter that would increase the voltage to 12 volts.
- Please note that any inverter must be rated at 8 amps or higher in order for the radio to operate properly.

Copyright © 2018 Retro Manufacturing, LLC

Rear USB Inputs

One USB connector cable is located at the rear of the Motor 2B radio body. During installation, you must route the cable to a convenient and accessible location for plugging in USB devices. If the cable provided is not long enough (20 inches), you may use our optional USB Extension Cable (not included) to extend the reach of the cable. This cable also allows you to install the USB port into the factory location for the cigarette lighter for a factory look and easy access.

STEP 5: Finish the Installation

IF USING A BEZEL, place the bezel on the face of the radio, then install the assembled radio from behind the dash until the bezel and radio face are flush with the front of the dash and the radio shafts protrude through the shaft openings in the dash. Using the supplied washers and shaft nuts (see "What's In the Box" on page 4), secure the radio to the dash.

IF USING A FACEPLATE, slide the radio into the hole from behind the dash, then align the faceplate over the radio shafts from the front. Using the supplied washers and shaft nuts (see "What's In the Box" on page 4), secure the faceplate to the dash and the radio.

DAMAGE RESULTING FROM OVERTIGHTENING THE SHAFT NUTS WILL VOID YOUR WARRANTY.

Next, you'll need to secure the rear of the radio using the supplied back strap and hardware (see "What's in the Box" on page 4). The back strap mounts using the threads in the rear of the radio body and can be bent and adjusted to align with the mounting point of the original factory radio behind the dash.

THE SHAFTS ARE NOT STRONG ENOUGH TO SUPPORT THE WEIGHT OF THE RADIO. FAILURE TO SECURE THE RADIO WITH THE BACK STRAP CAN DAMAGE YOUR SHAFTS AND WILL VOID YOUR WARRANTY.

Figure 6 - Installing the Back Strap

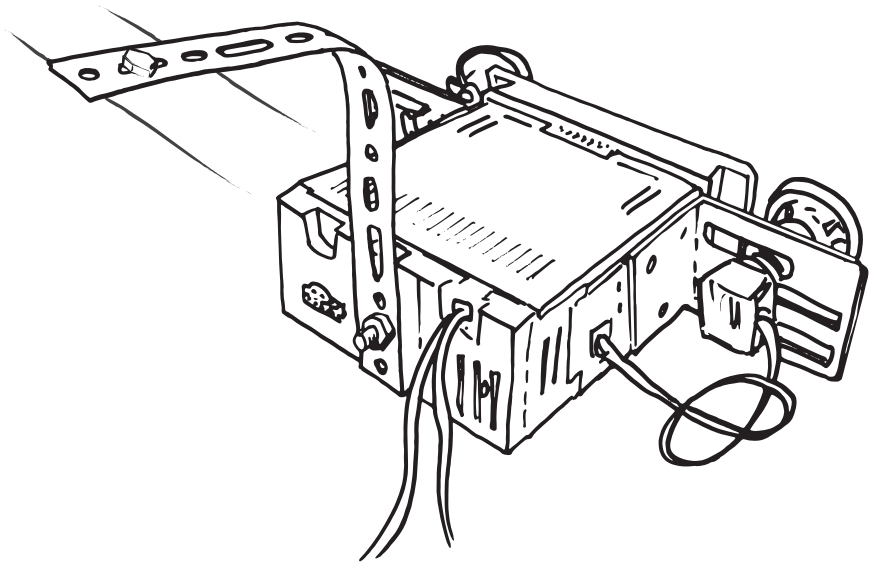

View from behind dash

Finally, slide the rear knobs over the shafts, rotating them into the correct position, and push them into place. Mount the front knobs by gently pressing them onto the shaft.

DO NOT PRESS TOO HARD. PRESSING TOO HARD CAN DAMAGE YOUR SHAFTS AND WILL VOID YOUR WARRANTY.

Copyright © 2018 Retro Manufacturing, LLC

Basic Operation

Figure 6 - Front Panel Controls

1. Left Front Knob
2. Left Rear Knob
3. Push-Button
4. Push-Button
5. Push-Button
6. Push-Button
7. Push-Button
8. Right Front Knob
9. Right Rear Knob

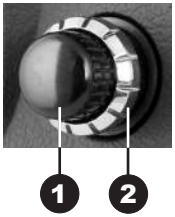

Figure 7 - Left Shaft with Knobs

GENERAL OPERATION

Power On/Off

Press the left front knob (#1) to turn the unit on.
RETROSOUND will appear on the screen.

Press and hold the left front knob (#1) to turn the unit off.
GOODBYE will appear on the screen to confirm that it has turned off.

Volume

Turn the left front knob (#1) to adjust the volume between 0-46.

Mode

Turn the left rear knob (#2) clockwise to select from available listening sources: RADIO, USB 1, BLUETOOTH.

(The USB source mode will not appear unless a USB device is plugged in).

The auxiliary and USB inputs are located at the back of the radio body. The auxiliary inputs may be used to play music from any portable device with a standard headphone output, such as a MP3 player, iPod® or iPhone®, portable CD player or portable satellite radio receiver. The USB input allows you to play music from a flash drive. To use these inputs, the cables must be routed to an accessible area during installation.

Radio Tuning

Turn the right front knob (#8) to tune to the next or previous AM/FM frequency.

NOTE: When the radio is tuned to a strong stereo FM station, the stereo indicator will appear on the upper right corner of the LCD screen (two oval circles).

Copyright © 2018 Retro Manufacturing, LLC

Radio Bands

Turn the right rear knob (#9) counter-clockwise to toggle through the five radio bands (two AM and three FM).

Storing Radio Pre-sets

There are six radio pre-sets for each radio band. For pre-sets one through five, tune to the desired radio station and then press and hold the push-button (#3-7) to store into memory. To store pre-set number six, tune to the station you want to store, then turn and hold right rear knob clockwise to store.

Selecting Radio Pre-sets

To recall radio pre-sets, press the appropriate pre-set button (#3-7) in the selected radio band. To recall pre-set six, turn the right rear knob (#9) clockwise and release it.

Mute

Press the right front knob (#8) to mute or unmute.

Subwoofer ON/OFF

This sub-menu (SUB) turns the subwoofer RCA output on or off.

Subwoofer Volume

This sub-menu (SUB VOL) adjusts the volume of the subwoofer between 0-12. This sub-menu will only appear when a subwoofer is attached and SUB ON is selected in the previous menu.

Subwoofer Crossover Frequency

This sub-menu (SUB 120H) allows adjustment of the frequency crossover point of the subwoofer between 80Hz, 120Hz or 160Hz.

TONE CONTROLS

This sub-menu allows advanced tonal adjustments, balance and fader controls and the pre-set equalizer options. To access this sub-menu, press the left front knob (#1). Repeatedly press the left front knob to scroll through the available options. To adjust within the sub-menu, turn the left front knob clockwise or counter-clockwise.

Digital Signal Processor (DSP)

This sub-menu allows you to turn the Digital Signal Processor (DSP) on and off. Factory default is DSP OFF. When set to DSP ON, you can choose one of three pre-set equalization settings:

- CLASSIC This setting offers subtle sonic adjustments that lend themselves to classical music.
- POP This setting accentuates bass and treble frequencies and is suitable for popular music.
- ROCK This setting accentuates treble frequencies and is suitable for rock music.

Bass

This sub-menu (BASS) allows bass tone adjustments. You may boost or cut low frequencies from +7 to -7.

Middle

This sub-menu (MIDDLE) allows mid tone adjustments. You may boost or cut mid frequencies from +7 to -7.

Treble

This sub-menu (TREBLE) allows treble tone adjustments. You may boost or cut high frequencies from +7 to -7.

Copyright © 2018 Retro Manufacturing, LLC

Balance

This sub-menu (BAL) allows adjustment of stereo sound to left or right. This may be helpful in compensating for the position of the driver in relation to the vehicle's speakers. Adjustment range is from 0-12 between left and right speakers.

Fader

This sub-menu (FADER) allows you to adjust the sound between the front and rear speakers. Adjustment range is from 0-12 between front and rear speakers.

SYSTEM SETTINGS

The System Settings sub-menu system enables access to numerous additional features of your radio. Press and hold the right-front knob (#8) for three seconds to access the System Settings sub-menu. Then rotate the right-front knob (#8) to scroll through the available sub-menu options. Once in a specific sub-menu, press the right-front knob (#8) to change the options.

Auto Seek/Manual

This sub-menu allows you to select either AUTO SEEK or MANUAL tuning when listening to the radio. In Auto Seek mode the radio will tune to the next available station when tuning.

A Store

This sub-menu will automatically fill FM pre-sets on all three FM bands of six pre-sets each (eighteen total pre-sets) with the strongest stations. To activate this feature, once in the system settings, press the right front knob (#1) until A STORE appears on the screen, then press the left front knob to activate. This process can take up to one minute.

Local/Distant

This sub-menu changes the sensitivity of the FM tuner. When listening to the FM tuner, selecting between LOCAL and DISTANT can aid in listening to weak FM stations or compensate for stations that have too strong a signal.

Clock

This sub-menu allows you to set the clock. To adjust hours, turn the right front knob (#8) clockwise. Adjusting past 12 will toggle the AM/PM indicators. Once the hour is set, press the right front knob to adjust minutes. Once minutes are set, press the right front knob to access the 12/24 menu.

Clock 12/24

This sub-menu allows you to adjust the clock from a twelve hour clock to a twenty-four hour clock. The factory default setting is for a twelve hour clock (CLK 12).

Display Frequency/Clock

This sub-menu allows you to adjust the priority screen view between radio frequency (DISP FREQ) and clock (CLK).

Clock On/Off

This sub-menu toggles off the clock when the radio is turned off. Default is CLK ON.

Beep On/Off

This sub-menu controls the audible beep confirmation that sounds during operation of the radio. Select BEEP ON to hear the audible beep, and BEEP OFF to disable the audible beep.

Copyright © 2018 Retro Manufacturing, LLC

Display Color (SCAN)

This sub-menu changes the display color. The default setting is SCAN, which will scan through all of the available colors. To customize your display color, look for the word SCAN in the sub-menu (if a custom color has already been chosen, look for that color name in the sub-menu), then press the right-front knob (#8) to select one of the preset colors: WHITE, GREEN 1, GREEN 2, GREEN 3, ORANGE, RED, PINK, PURPLE 1, PURPLE 2, BLUE 1, BLUE 2, USER, SCAN.

To create a custom color, select USER in the preset color menu, then rotate the right-front knob (#8) once. The display will say RGB. Now press the right-front knob (#8) once. This will allow you to edit the RGB values for 32,000 color variations. Rotate the right-front knob (#8) to adjust the reds, then press the same knob (#8) to move to the greens. Repeat this process to adjust the greens and the blues.

NOTE: If you lower all RGB settings down to "00" the display will go black, and you will need to reset the radio by disconnecting all power from the unit for 2 minutes.

Dimmer High/Low

This sub-menu allows you to adjust the radio's display brightness between high (DIMM HIGH) and low (DIMM LOW).

Bluetooth® On/Off (BT)

This sub-menu turns Bluetooth® on or off. Bluetooth® must be enabled in order to connect a Bluetooth® device for hands-free operation or streaming audio.

Bluetooth® Connect/Disconnect

This sub-menu allows the radio to be discoverable on your Bluetooth® device. Choose BT CONNEC to allow your device to connect, and BT DISCON to disable Bluetooth® connections.

To connect your device, choose BT CONNEC, then search for "RETROSOUND" in your phone's Bluetooth® device list.
Enter password "0000" if prompted.

Area USA/EUR/AUS/JAP/RUS

Motor 2B has the capability to receive radio broadcasts from around the world. This sub-menu allows you to adjust to broadcasts in your country. Factory default setting is United States (USA). Turn the right front knob (#8) to toggle between Europe (EUR), Australia (AUS), Japan (JAP) and Russia (RUS). To confirm the change, pause to let the sub-menu revert to your tuner. You will see your selected tuner mode: AREA USA, AREA EUR, AREA AUS, AREA JAP, AREA RUS.

Volume Last/Adjust

This sub-menu allows you to adjust the volume level that the radio first turns on to. The factory default setting is VOL LAST, which sets the turn on volume at the last volume used. VOL ADJUST allows you to pre-set the volume level that the radio turns on at from 0-46.

Copyright © 2018 Retro Manufacturing, LLC

USB DEVICE INSTRUCTIONS

Connecting a USB Device

The USB input is located at the rear of the radio body. The USB cable must be routed to a convenient and accessible location for plugging in USB devices.

Once you've turned on your radio and connected your flash drive or supported USB device to the USB input, the radio will find your songs and automatically begin playing them.

The USB icon appears on the LCD during USB playback.

To change songs, rotate the right front knob (#8) to access the next or previous song. The preset buttons on the front of the radio's control face (#3-7) will allow you to play/pause (#3), listen to 10 seconds of each song (INT) (#4), repeat the track you're listening to (RPT) (#5) or randomly select from all songs on the attached flash drive or supported USB device (RDM) (#6).

About MP3/WMA Files

MP3 (MPEG Audio Layer-3) and WMA (Windows Media Audio) is a format for compressed audio files. When your radio is in USB mode (USB 1 or USB 2), you can play MP3 and unprotected (no DRM) WMA files off the flash drive.

Common facts about these compressed-sound formats:

- High bit rate and high sampling frequencies are recommended for high sound quality.
- Selecting VBR (Variable Bit Rate) is not recommended because playing time is not displayed properly and there may be some audible skipping artifacts. The playback sound quality differs depending on the encoding circumstances. For details, refer to the user manual of your own encoding software.
- When adding MP3 files to your flash drive, it is recommended to set the bit rate to 128 kbps or more and "fixed."
- When adding WMA files to your flash drive, it is recommended to set the bit rate to 64 kbps or more and "fixed." Do not set the copy protect attribute on the WMA file or you will not be able to play the track.

- Motor 2B will read only FAT or FAT32 formatted flash drives.
  This radio will NOT read NTFS formatted drives.

- Motor 2B will read files placed in the root directory first before playing files in the folder structure of the drive. Please note that files are read in order of creation NOT alphabetically or numerically. Older files will get read first in a folder.

Caution! Except for private use, duplicating audio data (including MP3/WMA) or distributing, transferring or copying it, whether free or paid for without permission of the original copyright holder is strictly prohibited by law and international treaty.

Viewing MP3/WMA Song Information

When playing MP3/WMA files from the USB source, you can view the track name, album, artist info (ID-3) information automatically from these files. Once the USB drive is inserted, the following info will scroll across the screen in the following order: F-DIR (folder directory), MP3 FILE (file name of song), ALBUM (name of album) ARTIST (name of artist), SONG (name of song).

To access the clock when in USB mode, turn the left rear knob counter-clockwise. The clock will time out after a few seconds and will revert to the ID-3 information. Turning the left rear knob counter-clockwise again will revert to viewing the ID-3 information on-screen.

NOTE: FLAC format does not support ID-3 information and will not display the artist or song information. Not all music software handles ID-3 information the same way. Some software will produce MP3 files with ID-3 information that is not readable by Motor 4. If this occurs, you may need to use a converter or ID-3 editor to change the ID-3 information for the artist, album and song information to display properly on your radio.

Copyright © 2018 Retro Manufacturing, LLC

USB Playback Mode

The preset buttons (#3-7) on the front of the radio's control face will allow you to play/pause, listen to 10 seconds of each song (INTRO), randomly shuffle all songs (RDM) and navigate folders.

To play or pause, press button (#3).

To activate/deactivate scan, press button (#4).

To activate/deactivate shuffle, press button (#5).

To go to the previous folder, press button (#6).

To go to the next folder, press button (#7).

To switch to the next song, rotate the right front knob (#8) clockwise.

To switch to the previous song, rotate the right front knob (#8) counter-clockwise.

To activate/deactivate repeat, turn the right rear knob (#9) clockwise.

Bluetooth® Instructions

Bluetooth® Hands-Free and A2DP Streaming Operation

You can make or receive phone calls using a Bluetooth® enabled phone connected to your radio, controlling basic functions via the radio interface. During a call, the radio music source will be muted and the call broadcast through your car speaker system. You can also listen to music stored on a A2DP enabled Bluetooth® device.

Pairing a Bluetooth® Device

When connecting a Bluetooth® device for the first time, you must first pair the device with the unit. For most devices, pairing only needs to be done once.

1. To pair your device first make sure the Bluetooth® function is turned on in the radio sub-menu.
2. Then, change the BT DISCON function to BT CONNEC to make your radio discoverable (ensure Bluetooth® is enabled on your device).
3. Next, search for a new Bluetooth® device from the phone (this may take up to 30 seconds) and select "RETROSOUND" from the Bluetooth® device list.
4. If prompted, enter "0000" for the PIN. If successful, "PAIRING OK" will be displayed on the LCD screen.

The paired device will then connect to your radio automatically.

On some devices, you may need to select "SET AS AUTHORIZED" or similar to ensure your radio will automatically pair on future usage.

PAIRED NOTIFICATION DISPLAY: When the Bluetooth® device is paired with your radio, the Bluetooth® icon will appear on the LCD screen. This will occur whenever you use the system while the paired device is within range.

Copyright © 2018 Retro Manufacturing, LLC

Placing a Call

1. Dial the desired number on the paired phone.
2. Once dialing is in progress, CALLING will appear on the screen.
3. Once the call is in progress, TALK will appear on the screen along with the elapsed call time (TALK 00:00).

Receiving a Call

1. If a call is incoming, any audio playback from the current source will either be muted or paused (depending on the source) and PHONE IN will be shown on the screen along with the caller ID if it is enabled by the phone/carrier.
2. To accept the call, turn the left rear knob (#2) counter-clockwise.

Ending a Call

1. To end the call, turn the left rear knob (#2) counter-clockwise.

NOTE: We recommend mounting the microphone on the sun visor, A-pillar or steering column inside the vehicle close to the driver. The microphone is very sensitive, and you may speak at normal volume when using hands-free operation.

Streaming Music From Your Device

2. Once your device is paired with your radio, make sure the source mode is set to BT AUDIO.
3. Next, select your desired playback source on your device (iTunes®, Pandora®, etc) and play the music as you normally would.

NOTE: Some devices may allow your radio the ability to skip songs/tracks/selections by using the right front knob (#8).

Problem	Possible Cause	Action to Solve Problem
Radio will not turn on (no lights, no sound)	12 volt Batt+ wire not connected or incorrect voltage	Check all connections for proper voltage with a volt meter. Voltage range: 12-15 volts
	+12 volt accessory wire not connected or incorrect voltage	Check +12 volt accessory wire connection
	Ground wire not connected	Check ground connection
	Fuse on Batt+ is blown	Replace blown fuse
No sound heard from unit but unit lights up	Volume turned all the way down	Increase radio volume
	Internal amp in protection mode	Check speaker leads for any grounded or shorted wires
	Wrong source mode selected	Make sure the unit is in the desired source mode (RADIO, USB 1)
Unit blows fuses	Possible short in wiring	Incorrect fuse used, make sure only fuses with correct 15 amp ratings are used and check all wiring connections for possible short
	Battery hooked up backwards	Make sure battery is properly connected
USB Error	Invalid media / device type	Please review page 24 for which formats and devices are acceptable for playback

System Reset

To restore/reset the unit to factory defaults, remove all power from the unit, wait 5 minutes and then reconnect power. This will not reset your station presets.

Copyright © 2018 Retro Manufacturing, LLC

Do your radios work on 6 volt systems or on positive ground systems?

No. Our radios are 12 volt, negative ground only. After-market converters and inverters are available but must have at least 8 amps of continuous output.

I'm having problems getting the radio to turn on.

RetroSound® radios require 12 volts to both power leads. The red lead (+12 volt accessory) goes to a switched power source, and the yellow to a constant +12 volt power source. Using a volt meter, check the voltage when the key is turned from "off" to "on". If there is a significant drop in the voltage, the circuit the yellow lead is attached to cannot handle the additional draw of the radio. You will need to find another circuit that can handle the additional draw of the radio, or you will need to go directly to the battery.

What speaker wire do you recommend I use?

We recommend using 16 gauge wire for the speakers.

I have all 4 speakers connected to your radio and the display is lit up like it is working, but there's no sound coming out.

This usually indicates one of two things:

- Speaker wires touching each other or the vehicle chassis at some point. Check each speaker lead from radio to speaker.
- Speaker impedance below 4 ohms. Older speakers are usually not compatible with modern electronics.

My car originally came with a switch to control my automatic antenna. Can I use the RetroSound® radio's remote antenna wire to control my antenna?

No you cannot. Your factory antenna is known as "semi-automatic." It requires a switch to either extend or retract the antenna. You must retain this switch to control your antenna; the RetroSound® radio's power antenna wire is for more modern "fully-automatic" antennas not requiring a separate switch.

The sound output is all mid-range, with very little bass and a strangled-sounding upper range. What is wrong?

One of your speaker wires is connected backwards. This is called being "out of phase." Check to make sure positive is wired to positive and negative to negative on all your speakers.

Will cutting or bending the InfiniMount brackets void the warranty or harm the unit?

No. The RetroSound® patented InfiniMount bracket system has been designed specifically to be bent, cut and modified to simplify radio installation. Modification to the radio's brackets is actually encouraged to ensure proper fit.

If you have questions about modifying the bracket system, email us at tech@retromanufacturing.com or call us at 888.325.1555.

How much should I tighten the shaft nuts when installing the brackets and mounting the radio to the dash?

DO NOT OVERTIGHTEN the shaft nuts. The shaft nuts are **NOT** the only means of securing the radio to the dash. There is a back strap included which works with the shaft nuts to secure the radio to the dash. Please note that overtightening the shaft nuts could break the shafts. Retro Manufacturing, LLC will not be responsible for broken shafts due to overtightening of the shaft nuts.

Copyright © 2018 Retro Manufacturing, LLC

I have your radio with an amp connected, but hear a whining/buzzing sound through the speakers when I step on the accelerator.

If you have an external amplifier installed and experience a high-pitched noise that varies with the engine's RPM, there are many possible solutions:

- Make sure the amplifier's gain controls are not turned all the way up. Amplifiers amplify everything, including noise.
- Try grounding the amplifier near where it is installed.
- Try a filter on the amplifier's 12 volt power lead. Make sure to use a filter that includes a ground wire.
- On rare occasions, noise can be introduced through the antenna lead. If disconnecting the antenna makes the noise go away, you need to replace or repair the antenna plug where it goes into the radio.

When I plug in my flash drive the screen says USB ERR, and it won't play the files I placed on the drive.

- Make sure the files on the drive are .mp3, FLAC or unprotected .wma (Windows Media Audio) files. iTunes files are .m4a format and need to be converted to .mp3 format, which can easily be done using iTunes.
- Verify the capacity of the flash drive. Motor 2B will play 1 gig up to 32 gig size flash drives.
- Make sure the flash drive is not NTFS formatted. Always use the FAT32 format (most drives are formatted with FAT32 from the factory). Be sure to do a full format rather than a quick format, and check that none of the files or folders have names longer than 64 characters. It is very important that none of the audio files have DRM. Use only FLAC, MP3 or unprotected Windows Media format files.

FM

Tuning Range (USA, EUR, AUS, JAP, RUS tuning capable)	87.5-107.9MHz
Antenna Terminal	External Antenna Connector
Usable Sensitivity	12.5 dBf
Selectivity	75 dB @ 400kHz
Signal to Noise Ratio	62 dB (Stereo), 67 dB (mono)
Harmonic Distortion @ 1 kHz	0.8% (stereo), 0.5% (mono)
Separation	32 dB @ 1kHz
Frequency Response	30-16,000 Hz

AM (EU and US Tuning Capable)

Tuning Range (USA, EUR, AUS, JAP, RUS tuning capable)	530-1710 kHz
Antenna Terminal	External Antenna Connector

General

Dimensions (radio face & push-buttons only)	3.5"W x 1.5" H x 1.05" D
Dimensions (radio body)	3.96"W x 1.98"H x 4.30"D
Power Requirements	10.5-14.4 volts
Current Consumption (during operation)	Max. 15A
Current Consumption (car off)	<3.5 mA
Output Power (@ 14.4 volts @ 4 ohm @ 1% THD)	25x4 watts RMS 45x4 Max Power
Output Impedance	4-8ohm
Low Level Output (4 channels)	2.85 volts
EROM	Non-Volatile Memory
USB Input (USB cable length, 40")	5V (USB female input)

NOTE: All specifications are subject to change without notice.

Copyright © 2018 Retro Manufacturing, LLC

Limited Warranty

If your unit does not work properly because of defects in materials and workmanship, Retro Manufacturing, LLC (collectively referred to as "the warranter") will for the length of the period indicated in the chart below at its option either (a) repair your unit with new or refurbished parts, or (b) replace it with a new or refurbished unit. The warranty period starts with the date of original purchase. The decision to repair or replace will be made by the warranter.

CATEGORIES	PARTS
Motor 2B	One (1) Year

During the warranty period, there will be no charge for parts. You must mail in your unit prepaid during the warranty period. This warranty only applies to products purchased and serviced in the United States or Puerto Rico. This warranty is extended only to the original purchaser of a new product which was not sold "as is.".

To handle a warranty issue, contact us at tech@retromanufacturing.com or 888.325.1555 for a Return Authorization (RA) number. All returns and warranty issues must be accompanied by a Return Authorization number. Any product received without a RA number will be refused. For warranty outside of the United States, please contact the reseller where the product was purchased or email us at Tech@retromanufacturing.com . A purchase receipt or other proof of the original purchase date is required for warranty service.

LIMITED WARRANTY-LIMITS AND EXCLUSIONS

This warranty ONLY COVERS failures due to defects in materials and workmanship, and DOES NOT COVER normal wear and tear or cosmetic damage. The warranty ALSO DOES NOT COVER damages which occurred during shipment, failures which are caused by products not supplied by the warranter, failures which result from accident, misuse, abuse, neglect, bug infestation, mishandling, misapplication, alteration, faulty installation, set-up adjustment, maladjustment of consumer control, improper maintenance, improper antenna, inadequate signal reception or pickup, power line surge, improper voltage supply, lightning, modification, commercial use (such as use in hotels, offices, restaurants, or other business uses) or rental use of the product, or service by anyone other than Retro Manufacturing, LLC, or damage that is attributable to acts of God.

THERE ARE NO EXPRESS WARRANTIES EXCEPT AS LISTED UNDER "LIMITED WARRANTY". THE WARRANTER IS NOT LIABLE FOR INCIDENTAL OR CONSEQUENTIAL DAMAGES RESULTING FROM THE USE OF THIS UNIT, OR ARISING OUT OF ANY BREACH OF THIS WARRANTY. (As examples, this excludes damages for lost time, cost of having someone remove or re-install an installed unit if applicable, travel to and from the servicer, and loss of media, data or other memory contents. The items listed are not exclusive, but are for illustration only.) ALL EXPRESS AND IMPLIED WARRANTIES, INCLUDING THE WARRANTY OF MERCHANTABILITY, ARE LIMITED TO THE PERIOD OF THE LIMITED WARRANTY.

Some states do not allow the exclusion or limitation of incidental or consequential damages, or limitations on how long an implied warranty lasts, so the exclusions may not apply to you. This warranty gives you specific legal rights and you may also have other rights which vary from state to state. If a problem with this unit develops during or after the warranty period, you may contact your dealer or Retro Manufacturing, LLC.

If you need replacement parts, visit our website www.retromanufacturing.com, email us at sales@retromanufacturing.com or call 888.325.1555

(See "What's in the Box" on page 4 to confirm the part(s) needed).

NOTE: If you return a radio to us for credit any missing parts will be debited.

Replaceable Items

- Main Wiring Harness
- Power Wiring Harness
- Speaker Wiring Harness
- Metal Back Strap
- Metal Hardware Pack
- Plastic Washer Kit
- InfiniMount Shaft
- InfiniMount Brackets (pair)
- Shaft Covers (pair)
- Bezel / Faceplate
- Knobs

Purchase Notes

Record the place and date of purchase for future reference.

Model No.....

Serial No.....

Purchase Date.....

Purchased From.....

Keep this information and your sales receipt in a safe place.

Copyright © 2018 Retro Manufacturing, LLC

FCC NOTES

(1) This device complies with part 15 of the FCC Rules. Operation is subject to the following two conditions: (1) This device may not cause harmful interference, and (2) this device must accept any interference received, including interference that may cause undesired operation.
(2)changes or modifications not expressly approved by the party responsible for compliance could void the user's authority to operate the equipment.
(3)This equipment has been tested and found to comply with the limits for a Class B digital device, pursuant to part 15 of the FCC Rules. These limits are designed to provide reasonable protection against harmful interference in a residential installation. This equipment generates, uses and can radiate radio frequency energy and, if not installed and used in accordance with the instructions, may cause harmful interference to radio communications. However, there is no guarantee that interference will not occur in a particular installation. If this equipment does cause harmful interference to radio or television reception, which can be determined by turning the equipment off and on, the user is encouraged to try to correct the interference by one or more of the following measures:
—Reorient or relocate the receiving antenna.
—Increase the separation between the equipment and receiver.
—Connect the equipment into an outlet on a circuit different from that to which the receiver is connected.
—Consult the dealer or an experienced radio/TV technician for help.
(4)The equipment should be installed and operated with minimum distance 20cm between the radiator & your body.

INSTALLATION NOTES

Copyright © 2018 Retro Manufacturing, LLC

Retro®

MANUFACTURING

MODERN SOUND FOR YOUR CLASSIC

Retro Manufacturing, LLC, 7470 Commercial Way, Henderson, NV 89011
p) 888.325.1555 | f) 702.483.2229 | www.retromanufacturing.com