H181 WiFi Module

Product Specification

802.11b/g/n 1T1R WiFi Module

Version Ver1.0

History

Document Release	Date	Modification	Initials	Approved
Version V1.0	2020/05/06			

Overview

H181 is a highly integrated 2.4 GHz Wi-Fi SoC that packs the IEEE 802.11b/g/n baseband and RF circuit. The RF circuit consists of the power amplifier (PA), low noise amplifier (LNA), RF balun, antenna switch, and power management module. It supports 20MHz standard bandwidth, and provides a physical layer rate up to 72.2Mbit/s.

The Hi3881V100 Wi-Fi baseband supports the orthogonal frequency division multiplexing (OFDM) technology and is backward compatible with the direct sequence spread spectrum (DSSS) and complementary code keying (CCK) technologies, offering various data rates defined in the IEEE 802.11 b/g/n protocol.

Hi3881V100 integrates a high-performance 32-bit microprocessor, a hardware security engine.

Hi3881V100 SoC is applicable to IPC,IoT low-power intelligent products such as smart home appliances, intelligent lock, set box etc .

Key Specifications

General Specifications

- 1x1 2.4GHz frequency band (channels 1–11)
- PHY supporting IEEE 802.11b/g/n
  MAC supporting IEEE 802.11d/e/h/i/k/v/w
- Built-in PA and LNA, integrated with TX/RX Switch and Balun
- Station (STA) and access point (AP) modes, up to six STA devices allowed for access as an AP
- WFA WPA, WFA WPA2 personal, and WPS2.0
- 2/3/4-line PTA solution with BT and BLE chips coexisting
- Input voltage range: 2.3–3.6 V； I/O power voltage: 1.8 V or 3.3 V
- RF auto-calibration solution

PHY Features

- All single-antenna data rates of IEEE802.11b/g/n
- Maximum rate of 72.2Mbit/s@HT20 MCS7
- Standard 20MHz bandwidth
- STBC RX
- Short GI

MAC Features

- A-MPDU and A-MSDU
- Blk-ACK
- QoS

Other Information

- Operating temperature: –40°C to +85°C (–40°F to 185°F)

Solution Features

Stable and Reliable Communication Capability

- Reliable communication algorithms, including TPC, automatic rate adjustment, and weak interference immunity in complex environments
- Flexible Networking
- 256-node mesh networking
- Networking with standard 20MHz bandwidth

Complete Network Support

- IPv4/IPv6 network
- DHCPv4/DHCPv6 client/server
- DNS client function
- mDNS function
- CoAP/MQTT/HTTP/JSON basic components

Powerful Security Engine

- AES128/256 encryption and decryption algorithms
- HASH-SHA256 and HMAC_SHA256 algorithms
- RSA and ECC signature verification algorithms
- Random number generation, compliant with the FIPS 140-2 random test standard
- TLS/DTLS acceleration
- Built-in eFUSE, supporting secure storage, secure boot, and hardware ID
- Built-in MPU feature for memory isolation

Module Size (Units: mm)

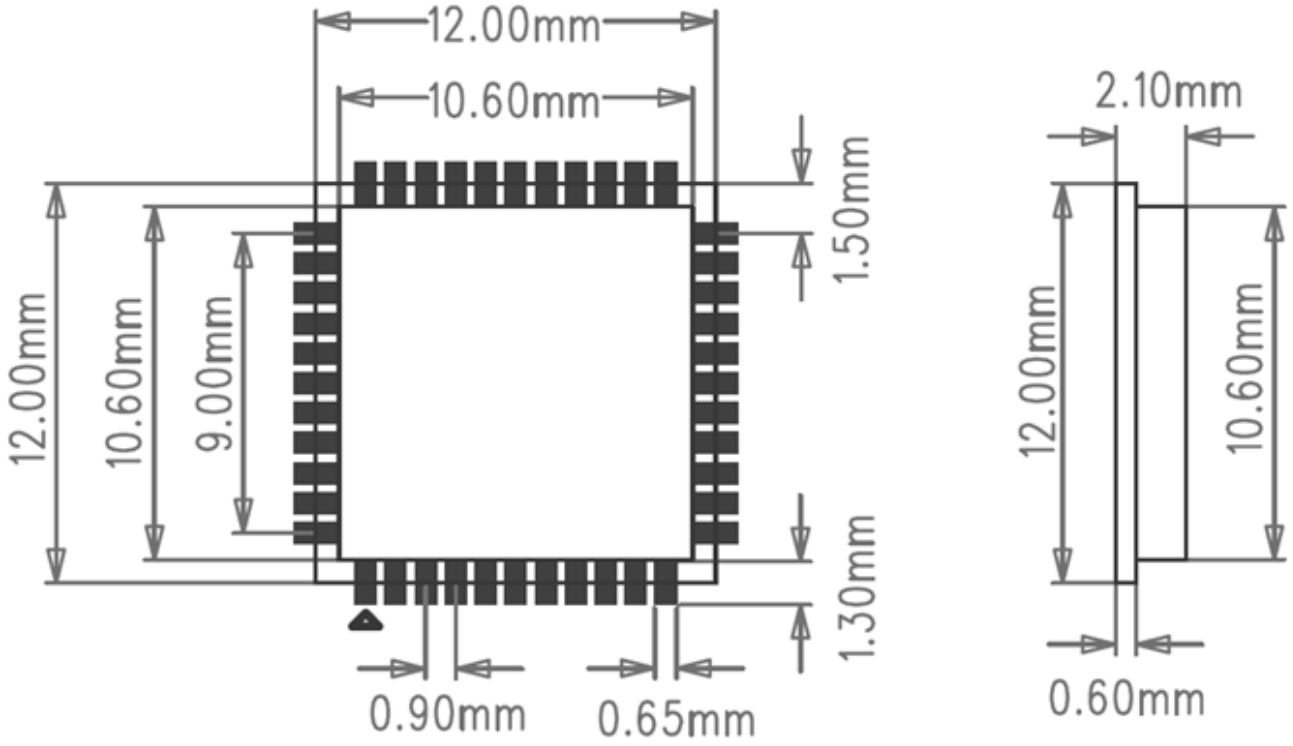

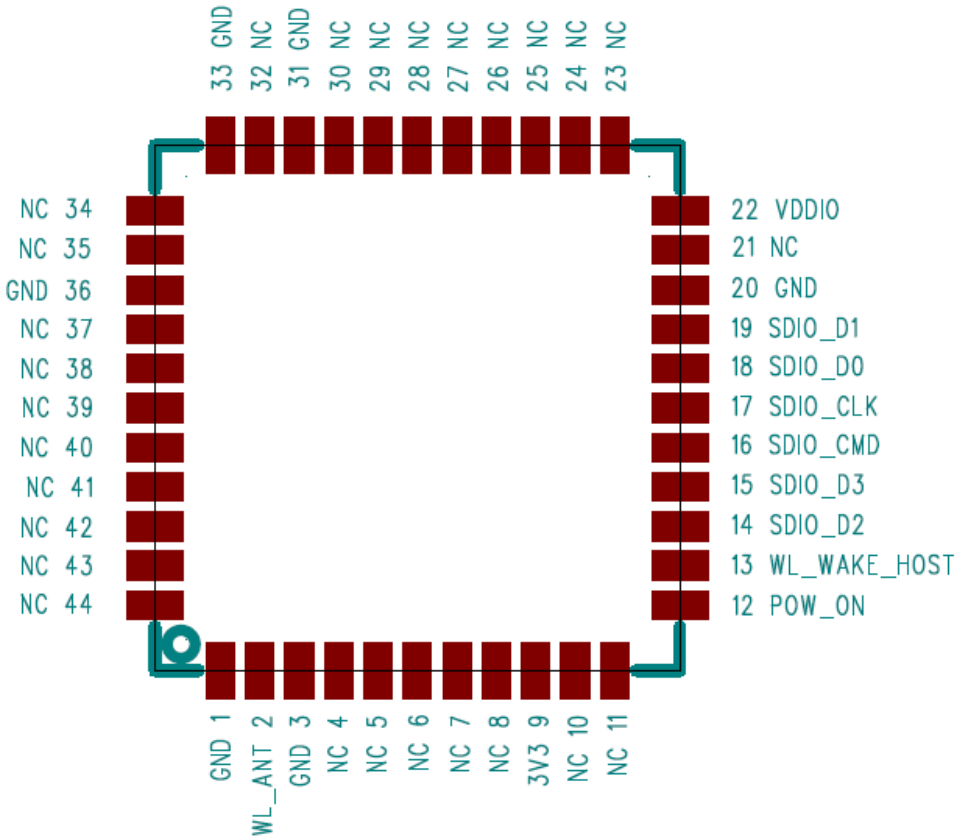

Module Pin definition

Pin	Function	Type	Voltage	Description
1	GND	GND	-	GND
2	WL_ANT	O_{RF}	-	WLAN RF In/Out
3	GND	GND	-	GND
4	NC	NC	-	NC
5	NC	NC	-	NC
6	NC	NC	-	NC
7	NC	NC	-	NC
8	NC	NC		NC
9	VBAT	I_{PMU}	3.3V	VBAT Power Supply
10	NC	NC		NC
11	NC	NC		NC
12	POW_ON	I_{ANA}	VDDIO	PMU Power ON Enable（0：Power OFF，1：Power ON）
13	WL_WAKE_HOST	I/O	VDDIO	WL_WAKE_HOST
14	SDIO_DAT2	I/O	VDDIO	SDIO_DAT2
15	SDIO_DAT3	I/O	VDDIO	SDIO_DAT3
16	SDIO_CMD	I/O	VDDIO	SDIO_CMD
17	SDIO_CLK	I	VDDIO	SDIO_CLK
18	SDIO_DAT0	I/O	VDDIO	SDIO_DAT0
19	SDIO_DAT1	I/O	VDDIO	SDIO_DAT1
20	GND	GND	-	GND
21	NC	NC	NC	NC
22	VDDIO	I_{PMU}	VDDIO	IO Power Pin，Support 1.8 or 3.3V
23	NC	NC	-	NC
24	NC	NC	-	NC
25	NC	NC	-	NC

26	NC	NC	-	NC
27	NC	NC	-	NC
28	NC	NC	-	NC
29	NC	NC	-	NC
30	NC	NC	-	NC
31	GND	GND	-	GND
32	NC	NC	-	NC
33	GND	GND	-	GND
34	NC	NC	-	NC
35	NC	NC	-	NC
36	GND	GND	-	GND
37	NC	NC	-	NC
38	NC	NC	-	NC
39	NC	NC	-	NC
40	NC	NC	-	NC
41	NC	NC	-	NC
42	NC	NC	-	NC
43	NC	NC	-	NC
44	NC	NC	-	NC

TEST Characteristics

1. TX TEST: Transmit Output Power

802.11b TX :Data Rate=11Mbps													
Channel	**1**	**2**	**3**	**4**	**5**	**6**	**7**	**8**	**9**	**10**	**11**	**12**	**13**
TX Pw (dBm)	15.75	15.72	15.17	15.23	15.95	16.04	16.10	15.77	15.79	15.47	15.95	15.56	15.55
EVM (dB)	-14.62	-14.65	-14.50	-14.43	-14.69	-15.03	-14.99	-14.85	-14.83	-14.88	-15.06	-15.03	-14.98
Freq.Offset (ppm)	-2.90	-3.06	-3.20	-3.18	-3.10	-3.24	-3.20	-3.18	-3.22	-3.24	-3.18	-3.24	-3.26
Criterion: Power > 16dBm, EVM < -10dB, Frequency Offset < ±10ppm													

802.11g TX : Data Rate= 54Mbps													
Channel	**1**	**2**	**3**	**4**	**5**	**6**	**7**	**8**	**9**	**10**	**11**	**12**	**13**
TX Pw (dBm)	15.74	15.70	16.10	16.14	16.04	16.20	15.46	15.85	15.86	15.76	15.36	15.60	15.55
EVM (dB)	-27.37	-27.58	-27.73	-27.48	-27.51	-28.33	-28.30	-28.52	-28.70	-28.50	-28.88	-28.88	-29.38
Freq.Offset (ppm)	-2.62	-2.66	-2.80	-2.78	-2.78	-2.88	-2.88	-2.82	-2.90	-2.90	-2.86	-2.88	-2.90
Criterion: Power > 14dBm, EVM < -25dB, Frequency Offset < ±10ppm													

802.11n(20) MCS7 TX : Data Rate= 65Mbps													
Channel	**1**	**2**	**3**	**4**	**5**	**6**	**7**	**8**	**9**	**10**	**11**	**12**	**13**
TX Pw (dBm)	16.36	16.36	15.79	15.87	15.75	15.86	16.22	15.62	15.67	15.66	16.16	16.34	16.28
EVM (dB)	-27.40	-27.51	-27.63	-27.61	-27.60	-28.36	-28.38	-28.26	-28.59	-28.28	-28.72	-29.07	-29.30
Freq.Offset (ppm)	-2.00	-1.76	-1.92	-1.94	-2.08	-2.26	-2.34	-2.34	-2.50	-2.50	-2.48	-2.56	-2.60
Criterion: Power > 13dBm, EVM < -27dB, Frequency Offset < ±10ppm													

2. RX TEST: RX Receiver Sensitivity

802.11b RX：Data Rate = 11Mbps													
Channel	**1**	**2**	**3**	**4**	**5**	**6**	**7**	**8**	**9**	**10**	**11**	**12**	**13**
PER (dB)	-90	-90	-90	-90	-90	-90	-90	-90	-90	-90	-90	-90	-90
Criterion: (11b,11Mbps)@8% ， PER<-76dBm													

802.11g RX：Data Rate= 54Mbps													
Channel	**1**	**2**	**3**	**4**	**5**	**6**	**7**	**8**	**9**	**10**	**11**	**12**	**13**
PER (dB)	-77	-77	-77	-77	-77	-77	-77	-77	-77	-77	-77	-77	-77
Criterion: (11g,54Mbps)@10% ， PER<-65dBm													

802.11n (20) MCS7 RX：Data Rate= 65Mbps													
Channel	**1**	**2**	**3**	**4**	**5**	**6**	**7**	**8**	**9**	**10**	**11**	**12**	**13**
PER (dB)	-73	-73	-73	-73	-73	-73	-73	-73	-73	-73	-73	-73	-73
Criterion: (11n,HT20,MCS7)@10%，PER<-64dBm													

Parameter Requirements on Lead-Free Reflow Soldering

- shows the thermal profile of lead-free reflow soldering

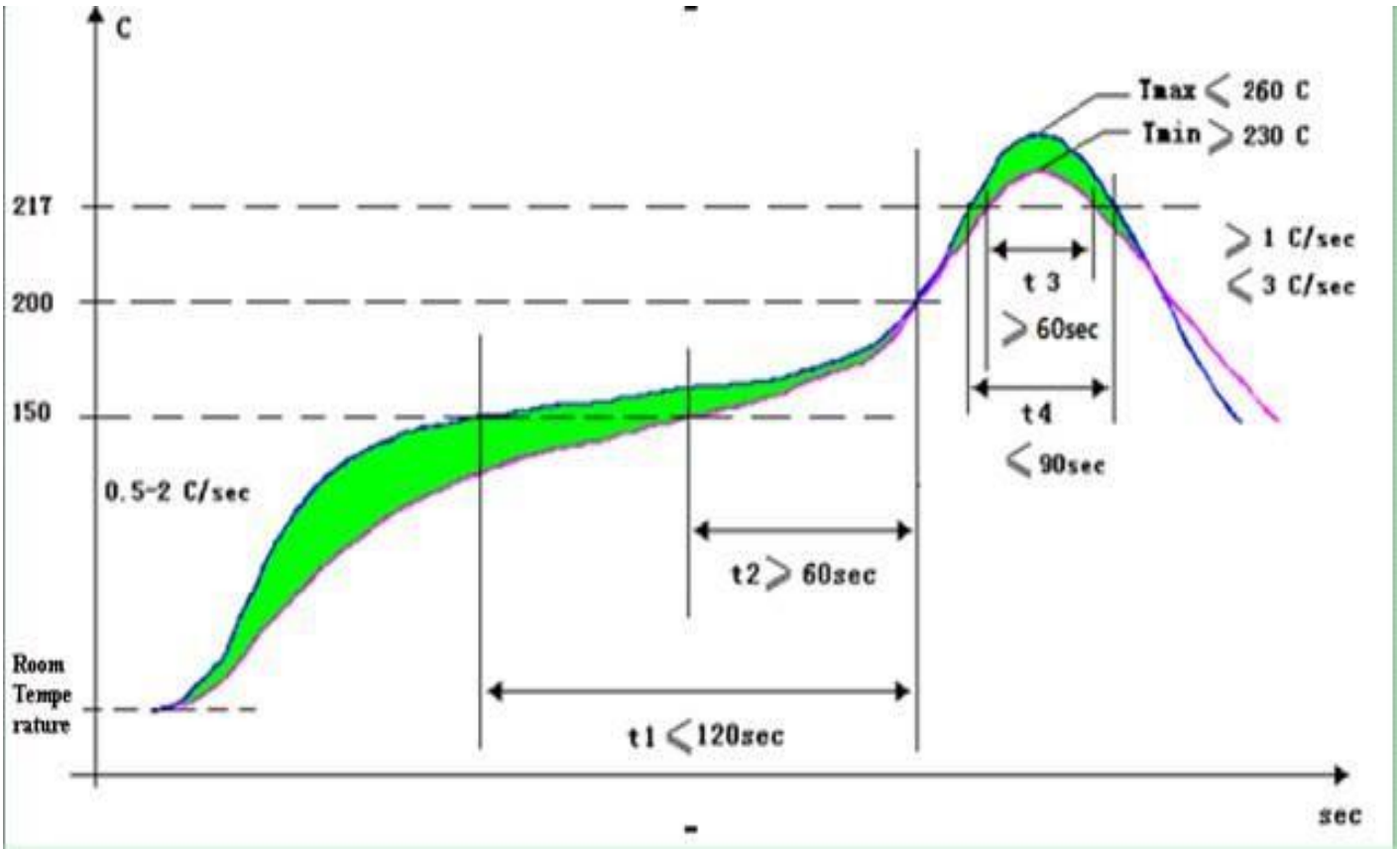

Parameters of lead-free reflow soldering

Zone	Time	Heating Rate	Peak Temperature	Cooling Rate
Preheat zone(40～150℃)	60～150s	≤2.0℃/s	-	-
Soak zone(150～200℃)	60～120s	<1.0℃/s	-	-
Reflow zone(>217℃)	60～90s	-	230～260℃	-
Cooling zone(Tmax～180℃)	-	-	-	1.0℃/s≤Slope≤4.0℃/s

Note：

- Preheat zone: The temperate range is 40–150°C (104–302°F), the heating rate must be about 2.0°C/s (36°F/s), and the zone duration must be 60–150s.
- Soak zone: The temperature range is 150–200°C (302–392°F), the heating rate must be less than 1.0°C/s (34°F/s), and the zone duration must be 60–120s. Slow heating is required; otherwise, soldering is poor.
- Reflow zone: The zone temperature increases from 217°C (423°F) to Tmax and then decreases to 217°C (423°F) again. The zone duration must be 60–90s.
- Cooling zone: The zone temperature decreases from Tmax to 180°C (356°F). The cooling rate cannot exceed 4.0°C/s (39°F/s).
- It should take no more than 6 minutes for the ambient temperature to increase from 25°C (77°F) to 250°C (482°F).
- The thermal profile shown in the preceding figure provides recommended values. Customers need to adjust the values based on actual production.
- Typically, the duration of the reflow zone is 60–90s. For the boards with great heat capacity, the duration can be prolonged to 120s. For details about the requirements on package thermal resistance, see the IPC/JEDEC J-STD-020D standard. For details about the method of measuring the package temperature, see the JEP 140 standard.

Thermal resistance standard for the lead-free package

Package Thickness	Volume mm3 <350	Volume mm3 350～2000	Volume mm3 >2000
<1.6mm	260℃	260℃	260℃
1.6mm～2.5mm	260℃	250℃	245℃
>2.5mm	250℃	245℃	245℃

The component soldering terminals (such as the solder balls and pins) and external heat sinks are not considered for volume calculation.

The method of measuring the reflow soldering thermal profile is as follows:

According to the JEP140 standard, to measure the package temperature, you are advised to place the temperature probe of the thermocouple close to the chip surface if the chip package is thin, or to drill a hole on the package surface and place the temperature probe of the thermocouple into the hole if the chip

package is thick. The second method is recommended based on the thickness of most chip packages. However, this method is not applicable if the chip package is too thin to drill a hole.

Federal Communication Commission Statement (FCC, U.S.)

This equipment has been tested and found to comply with the limits for a Class B digital device, pursuant to Part 15 of the FCC Rules. These limits are designed to provide reasonable protection against harmful interference in a residential installation. This equipment generates, uses and can radiate radio frequency energy and, if not installed and used in accordance with the instructions, may cause harmful interference to radio communications. However, there is no guarantee that interference will not occur in a particular installation. If this equipment does cause harmful interference to radio or television reception, which can be determined by turning the equipment off and on, the user is encouraged to try to correct the interference by one of the following measures:
- Reorient or relocate the receiving antenna.
- Increase the separation between the equipment and receiver.
- Connect the equipment into an outlet on a circuit different from that to which the receiver is connected.
- Consult the dealer or an experienced radio/TV technician for help.

This device complies with Part 15 of the FCC Rules. Operation is subject to the following two conditions: (1) This device may not cause harmful interference, and (2) this device must accept any interference received, including interference that may cause undesired operation.

FCC Caution:
Any changes or modifications not expressly approved by the party responsible for compliance could void the user's authority to operate this equipment.

IMPORTANT NOTES

Co-location warning:
This transmitter must not be co-located or operating in conjunction with any other antenna or transmitter.

OEM integration instructions:
This device is intended only for OEM integrators under the following conditions:

The transmitter module may not be co-located with any other transmitter or antenna. The module shall be only used with the external antenna(s) that has been originally tested and certified with this module.

As long as the conditions above are met, further transmitter test will not be required. However, the OEM integrator is still responsible for testing their end-product for any additional compliance requirements required with this module installed (for example, digital device emissions, PC peripheral requirements, etc.).

Validity of using the module certification:
In the event that these conditions cannot be met (for example certain laptop configurations or co-location with another transmitter), then the FCC authorization for this module in combination with the host equipment is no longer considered valid and the FCC ID of the module cannot be used on the final product. In these circumstances, the OEM integrator will be responsible for re-evaluating the end product (including the transmitter) and obtaining a separate FCC authorization.

End product labeling:
The final end product must be labeled in a visible area with the following: “Contains Transmitter Module FCC ID: 2AXX8-H181”.

Information that must be placed in the end user manual:
The OEM integrator has to be aware not to provide information to the end user regarding how to install or remove this RF module in the user's manual of the end product which integrates this module. The end user manual shall include all required regulatory information/warning as show in this manual.

Integration instructions for host product manufacturers according to KDB 996369 D03 OEM Manual v01

2.2 List of applicable FCC rules
FCC Part 15 Subpart C 15.247 & 15.207 & 15.209

2.3 Specific operational use conditions
The module is a WIFI module with WIFI 2.4G function.
Operation Frequency: 2412~2462MHz
Number of Channel: 11
Modulation: 802.11b CCK; 802.11g/n OFDM
Type: FPC Antenna
Gain: 1.5 dBi
The module can be used for mobile or applications with a maximum 1.5dBi antenna. The host manufacturer installing this module into their product must ensure that the final composit product complies with the FCC requirements by a technical assessment or evaluation to the FCC rules, including the transmitter operaition. The host manufacturer has to be aware not to provide information to the end user regarding how to install or remove this RF module in the user's manual of the end product which integrates this module. The end user manual shall include all required regulatory information/warning as show in this manual.

2.4 Limited module procedures
Applicable. The module is a Limited module and complies with the requirement of FCC Part 15.212.

2.5 Trace antenna designs
Not applicable. The module has its own antenna, and doesn’t need a host’s printed board microstrip trace antenna etc.

2.6 RF exposure considerations
The module must be installed in the host equipment such that at least 20cm is maintained between the antenna and users’ body; and if RF exposure statement or module layout is changed, then the host product manufacturer required to take responsibility of the module through a change in FCC ID or new application. The FCC ID of the module cannot be used on the final product. In these circumstances, the host manufacturer will be responsible for re-evaluating the end product (including the transmitter) and obtaining a separate FCC authorization

2.7 Antennas
Antenna Specification are as follows:
Type: FPC Antenna
Gain: 1.5 dBi
This device is intended only for host manufacturers under the following conditions:
The transmitter module may not be co-located with any other transmitter or antenna;
The module shall be only used with the internal antenna(s) that has been originally tested and certified with this module. The antenna must be either permanently attached or employ a ‘unique’ antenna coupler.
As long as the conditions above are met, further transmitter test will not be required. However, the host manufacturer is still responsible for testing their end-product for any additional compliance requirements required with this module installed (for example, digital device emissions, PC peripheral requirements, etc.).

2.8 Label and compliance information
Host product manufacturers need to provide a physical or e-label stating “Contains FCC ID: 2AXX8-H181” with their finished product.

2.9 Information on test modes and additional testing requirements

Operation Frequency: 2412~2462MHz
Number of Channel: 11
Modulation: 802.11b CCK; 802.11g/n OFDM
Host manufacturer must perfom test of radiated & conducted emission and spurious emission, etc according to the actual test modes for a stand-alone modular transmitter in a host, as well as for multiple simultaneously transmitting modules or other transmitters in a host product.
Only when all the test results of test modes comply with FCC requirements, then the end product can be sold legally.

2.10 Additional testing, Part 15 Subpart B disclaimer

The modular transmitter is only FCC authorized for FCC Part 15 Subpart C 15.247 & 15.207 & 15.209 and that the host product manufacturer is responsible for compliance to any other FCC rules that apply to the host not covered by the modular transmitter grant of certification. If the grantee markets their product as being Part 15 Subpart B compliant (when it also contains unintentional-radiator digital circuity), then the grantee shall provide a notice stating that the final host product still requires Part 15 Subpart B compliance testing with the modular transmitter installed.

FCC STATEMENT :

This device complies with Part 15 of the FCC Rules. Operation is subject to the following two conditions:

(1) This device may not cause harmful interference, and

(2) This device must accept any interference received, including interference that may cause undesired operation.

Warning: Changes or modifications not expressly approved by the party responsible for compliance could void the user's authority to operate the equipment.

NOTE: This equipment has been tested and found to comply with the limits for a Class B digital device, pursuant to Part 15 of the FCC Rules. These limits are designed to provide reasonable protection against harmful interference in a residential installation. This equipment generates uses and can radiate radio frequency energy and, if not installed and used in accordance with the instructions, may cause harmful interference to radio communications. However, there is no guarantee that interference will not occur in a particular installation. If this equipment does cause harmful interference to radio or television reception, which can be determined by turning the equipment off and on, the user is encouraged to try to correct the interference by one or more of the following measures:

Reorient or relocate the receiving antenna.

Increase the separation between the equipment and receiver.

Connect the equipment into an outlet on a circuit different from that to which the receiver is connected.

Consult the dealer or an experienced radio/TV technician for help.

FCC Radiation Exposure Statement:

This equipment complies with FCC radiation exposure limits set forth for an uncontrolled environment. This equipment should be installed and operated with minimum distance 20cm between the radiator & your body.

Labels

Host Device must contain the following label on the outside of the unit:

Contains FCC ID：2AXX8-H181

Installation Guidance

The final host / module combination may also need to be evaluated against the FCC Part 15B criteria for unintentional radiators in order to be properly authorized for operation as a Part 15 digital device.

The user's manual or instruction manual for an intentional or unintentional radiator shall caution the user that changes or modifications not expressly approved by the party responsible for compliance could void the user's authority to operate the equipment. In cases where the manual is provided only in a form other than paper, such as on a computer disk or over the Internet, the information required by this section may be included in the manual in that alternative form, provided the user can reasonably be expected to have the capability to access information in that form.

To ensure compliance with all non-transmitter functions the host manufacturer is responsible for ensuring compliance with the module(s) installed and fully operational. For example, if a host was previously authorized as an unintentional radiator under the Declaration of Conformity procedure without a transmitter certified module and a module is added, the host manufacturer is responsible for ensuring that the after the module is installed and operational the host continues to be compliant with the Part 15B unintentional radiator requirements.