TEST REPORT

Report No.:	BCTC2009002062-2E
Applicant:	Topon Smartech Limited
Product Name:	Smart door lock
Model/Type Ref.:	F006-0A
Tested Date:	Sep. 24, 2020 to Nov. 03, 2020
Issued Date:	Nov. 03, 2020

Shenzhen BCTC Testing Co., Ltd.

FCC ID:2AXYCF006-0A

Product Name:	Smart door lock
Trademark:	N/A
Model/Type Ref.:	F006-0A M006-0A, F007-0A , M007-0A, F008-01, F008-02, F008-03
Prepared For:	Topon Smartech Limited
Address:	No. 5, Huafu Rd. Bianjiao Industrial Zone, Ronggui, Shunde, Foshan, Guangdong, P.R. China
Manufacturer:	Topon Smartech Limited
Address:	No. 5, Huafu Rd. Bianjiao Industrial Zone, Ronggui, Shunde, Foshan, Guangdong, P.R. China
Prepared By:	Shenzhen BCTC Testing Co., Ltd.
Address:	1-2F, East of B Building, Pengzhou Industrial, Fuyuan 1st Road, Qiaotou Community, Fuyong Street, Bao'an District, Shenzhen, China
Sample Received Date:	Sep. 24, 2020
Sample tested Date:	Sep. 24, 2020 to Nov. 03, 2020
Issue Date:	Nov. 03, 2020
Report No.:	BCTC2009002062-2E
Test Standards	FCC Part15.225 ANSI C63.10-2013
Test Results	PASS
Remark:	This is NFC radio test report.

Tested by:

Kelsey Tan

Kelsey Tan/ Project Handler

Approved by:

Zero Zhou/Reviewer

SHENZHEN BCTC TESTING CO.,LTD. BCTC APPROVED 倍测检测

The test report is effective only with both signature and specialized stamp.This result(s) shown in this report refer only to the sample(s) tested. Without written approval of Shenzhen BCTC Testing Co., Ltd, this report can't be reproduced except in full.The tested sample(s) and the sample information are provided by the client.

TABLE OF CONTENT

Test Report Declaration Page
1. VERSION 5
2. TEST SUMMARY 6
3. MEASUREMENT UNCERTAINTY 7
4. PRODUCT INFORMATION AND TEST SETUP 8
4.1 Product Information 8
4.2 Test Setup Configuration 8
4.3 Support Equipment 9
4.4 Channel List 9
4.5 Test Mode 9
5. TEST FACILITY AND TEST INSTRUMENT USED 10
5.1 Test Facility 10
5.2 Test Instrument Used 11
6. CONDUCTED EMISSIONS 12
6.1 Block Diagram Of Test Setup 12
6.2 Limit 12
6.3 Test procedure 12
6.4 EUT operating Conditions 13
6.5 Test Result 13
7. RADIATED EMISSIONS 14
7.1 Block Diagram Of Test Setup 14
7.2 Limit 15
7.4 EUT operating Conditions 16
7.5 Test Result 17
8. RADIATED BAND EMISSION MEASUREMENT 20
8.1 Block Diagram Of Test Setup 20
8.2 Limit 20
8.3 Test procedure 21
8.4 EUT operating Conditions 21
8.5 Test Result 22
9. BANDWIDTH TEST 23
9.1 Block Diagram Of Test Setup 23
9.3 Test procedure 23
9.4 EUT operation conditions 23
9.5 Test Result 24
10. TRANSMITTER FREQUENCY STABILITY 25
10.1 Block Diagram Of Test Setup 25
10.2 Limit 25
10.3 Test procedure 25
10.4 EUT operating Conditions 25
10.5 Test Result 26
11. ANTENNA REQUIREMENT 27
11.1 STANDARD REQUIREMENT 27

11.2 EUT ANTENNA..... 27
12. EUT PHOTOGRAPHS..... 28
13. EUT TEST SETUP PHOTOGRAPHS..... 29

(Note: N/A means not applicable)

1. VERSION

Report No.	Issue Date	Description	Approved
BCTC2009002062-2E	Nov. 03, 2020	Original	Valid

2. TEST SUMMARY

The Product has been tested according to the following specifications:

No.	Test Parameter	Clause No	Results
1	15.207	Conducted Emission	N/A
2	Part 15.209(a), 15.225(d)	Radiated Spurious Emission	PASS
3	15.215	Bandwidth	PASS
4	Part 15.209(a), 15.225(a)(b)(c)(d)	Band Edge Emission	PASS
5	Part 15.225(e)	Transmitter Frequency Stability (Temperature & Voltage Variation)	PASS
6	15.203	Antenna Requirement	PASS

3. MEASUREMENT UNCERTAINTY

Where relevant, the following measurement uncertainty levels have been estimated for tests performed on the Product as specified in CISPR 16-4-2. This uncertainty represents an expanded uncertainty expressed at approximately the 95% confidence level using a coverage factor of k=2.

No.	Item	Uncertainty
1	3m camber Radiated spurious emission(30MHz-1GHz)	U=4.3dB
2	3m chamber Radiated spurious emission(1GHz-18GHz)	U=4.5dB
3	3m chamber Radiated spurious emission(18GHz-40GHz)	U=3.34dB
4	Conducted Adjacent channel power	U=1.38dB
5	Conducted output power uncertainty Above 1G	U=1.576dB
6	Conducted output power uncertainty below 1G	U=1.28dB
7	humidity uncertainty	U=5.3%
8	Temperature uncertainty	U=0.59℃

4. PRODUCT INFORMATION AND TEST SETUP

4.1 Product Information

Model/Type Ref.:	F006-0A M006-0A, F007-0A , M007-0A, F008-01, F008-02, F008-03
Model differences:	All the model are the same circuit and RF module, except model names and color.
Hardware Version:	N/A
Software Version:	N/A
Operation Frequency:	13.56MHz
Modulation Type:	ASK
Number Of Channel	1 CH
Antenna type:	Coil Antenna
Antenna Gain:	0dBi
Ratings:	DC 6V

4.2 Test Setup Configuration

See test photographs attached in *EUT TEST SETUP PHOTOGRAPHS* for the actual connections between Product and support equipment.

Radiated Spurious Emission

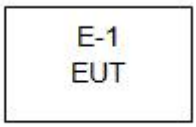

4.3 Support Equipment

No.	Device Type	Brand	Model	Series No.	Data Cable	Power Cord
E-1	Smart door lock	N/A	F006-0A	N/A	EUT	E-1

Notes:

1. All the equipment/cables were placed in the worst-case configuration to maximize the emission during the test.
2. Grounding was established in accordance with the manufacturer's requirements and conditions for the intended use.

4.4 Channel List

Channel List	
Channel	Frequency(MHz)
01	13.56

4.5 Test Mode

To investigate the maximum EMI emission characteristics generates from EUT, the test system was pre-scanning tested base on the consideration of following EUT operation mode or test configuration mode which possible have effect on EMI emission level. Each of these EUT operation mode(s) or test configuration mode(s) mentioned above was evaluated respectively.

For All Mode	Description
Mode 1	TX Mode

Link mode(conducted emission and Radiated emission)	
Final Test Mode	Description
Mode 1	TX Mode

Note:

(1) The measurements are performed at the highest, middle, lowest available channels.

(2) Fully-charged battery is used during the test

5. TEST FACILITY AND TEST INSTRUMENT USED

5.1 Test Facility

All measurement facilities used to collect the measurement data are located at Shenzhen BCTC Testing Co., Ltd. Address: 1-2F, East of B Building, Pengzhou Industrial, Fuyuan 1st Road, Qiaotou Community, Fuyong Street, Bao'an District, Shenzhen, China. The site and apparatus are constructed in conformance with the requirements of ANSI C63.4 and CISPR 16-1-1 other equivalent standards.

FCC Test Firm Registration Number: 712850

IC Registered No.: 23583

5.2 Test Instrument Used

Radiated emissions Test (966 chamber)					
Equipment	**Manufacturer**	**Model#**	**Serial#**	**Last Cal.**	**Next Cal.**
966 chamber	ChengYu	966 Room	966	Jun. 06. 2020	Jun. 05, 2023
Receiver	R&S	ESR3	102075	Jun. 08, 2020	Jun. 07, 2021
Receiver	R&S	ESRP	101154	Jun. 08, 2020	Jun. 07, 2021
Amplifier	Schwarzbeck	BBV9718	9718-309	Jun. 04, 2020	Jun. 03, 2021
Amplifier	Schwarzbeck	BBV9744	9744-0037	Jun. 04, 2020	Jun. 03, 2021
TRILOG Broadband Antenna	schwarzbeck	VULB 9163	VULB9163 -942	Jun. 08, 2020	Jun. 07, 2021
Horn Antenna	SCHWARZBECK	BBHA9120 D	1541	Jun. 10, 2020	Jun. 09, 2021
Horn Antenna (18GHz-40 GHz)	SCHWARZBECK	BBHA9170	822	Jun. 10, 2020	Jun. 09, 2021
Amplifier (18GHz-40 GHz)	MITEQ	TTA1840-35-HG	2034381	Jun. 08, 2020	Jun. 07, 2021
Loop Antenna (9KHz-30MHz)	SCHWARZBECK	FMZB1519 B	014	Jun. 08, 2020	Jun. 07, 2021
RF cables1 (9kHz-30MHz)	Huber+Suhnar	9kHz-30MHz	B1702988-0008	Jun. 08, 2020	Jun. 07, 2021
RF cables2 (30MHz-1GHz)	Huber+Suhnar	30MHz-1GHz	1486150	Jun. 08, 2020	Jun. 07, 2021
RF cables3 (1GHz-40GHz)	Huber+Suhnar	1GHz-40GHz	1607106	Jun. 08, 2020	Jun. 07, 2021
Power Metter	Keysight	E4419B	\	Jun. 08, 2020	Jun. 07, 2021
Power Sensor (AV)	Keysight	E9 300A	\	Jun. 08, 2020	Jun. 07, 2021
Signal Analyzer 20kHz-26.5 GHz	KEYSIGHT	N9020A	MY49100060	Jun. 04, 2020	Jun. 03, 2021
Spectrum Analyzer 9kHz-40GHz	Agilent	FSP40	100363	Jun. 08, 2020	Jun. 07, 2021
Software	Frad	EZ-EMC	FA-03A2 RE	\	\

6. CONDUCTED EMISSIONS

6.1 Block Diagram Of Test Setup

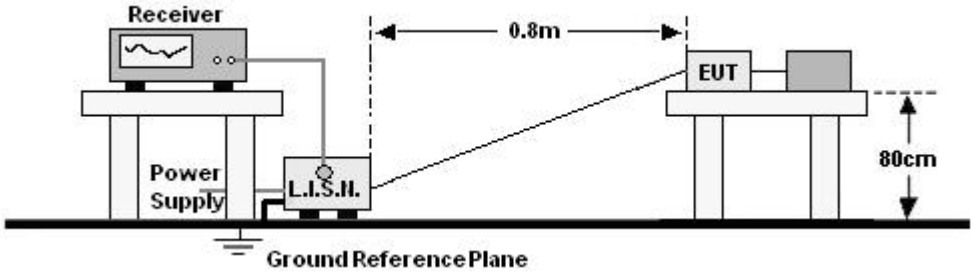

6.2 Limit

FREQUENCY (MHz)	Limit (dBuV)	
	Quas-peak	Average
0.15 -0.5	66 - 56 *	56 - 46 *
0.50 -5.0	56.00	46.00
5.0 -30.0	60.00	50.00

Notes:
1. *Decreasing linearly with logarithm of frequency.
2. The lower limit shall apply at the transition frequencies.

6.3 Test procedure

Receiver Parameters	Setting
Attenuation	10 dB
Start Frequency	0.15 MHz
Stop Frequency	30 MHz
IF Bandwidth	9 kHz

a. The Product was placed on a nonconductive table 0.8 m above the horizontal ground reference plane, and 0.4 m from the vertical ground reference plane, and connected to the main through Line Impedance Stability Network (L.I.S.N).

b. The RBW of the receiver was set at 9 kHz in 150 kHz ~ 30MHz with Peak and AVG detector in Max Hold mode. Run the receiver's pre-scan to record the maximum disturbance generated from Product in all power lines in the full band.

c. For each frequency whose maximum record was higher or close to limit, measure its QP and AVG values and record.

6.4 EUT operating Conditions

The EUT was configured for testing in a typical fashion (as a customer would normally use it). The EUT has been programmed to continuously transmit during test. This operating condition was tested and used to collect the included data.

6.5 Test Result

The EUT is powered by the Battery only, the test item is not applicable.

7. RADIATED EMISSIONS

7.1 Block Diagram Of Test Setup

（A）Radiated Emission Test-Up Frequency Below 30MHz

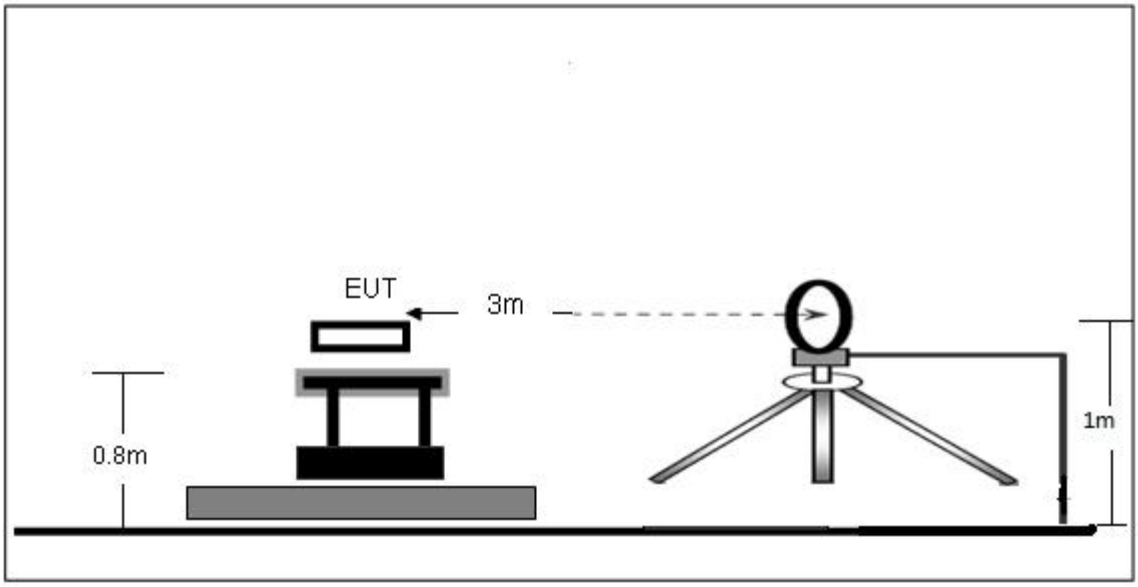

（B）Radiated Emission Test-Up Frequency 30MHz~1GHz

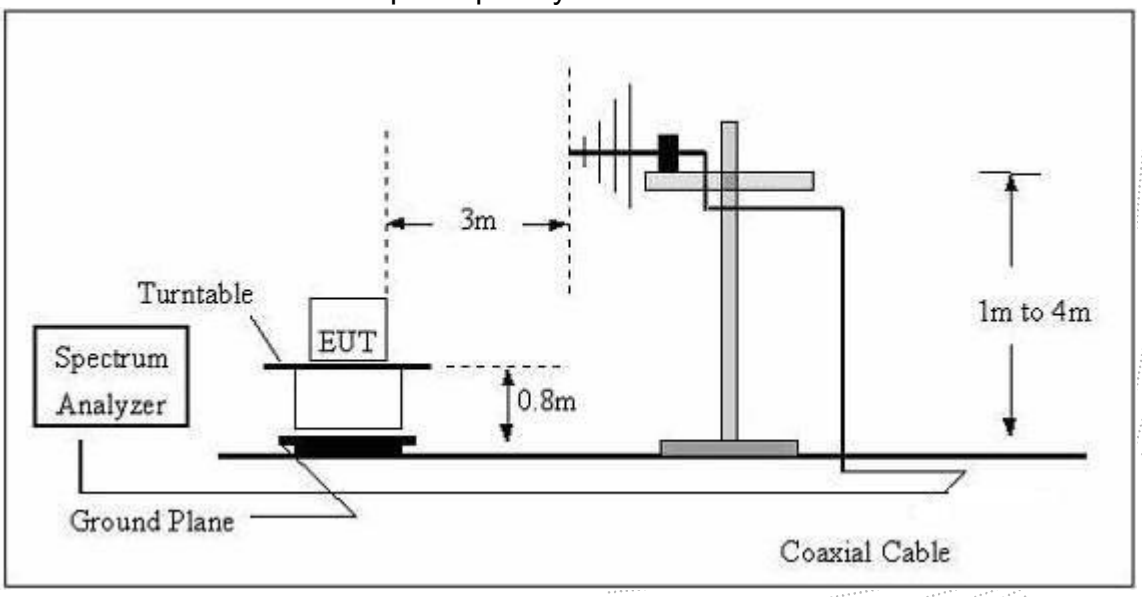

7.2 Limit

20dBc in any 100 kHz bandwidth outside the operating frequency band. In case the emission fall within the restricted band specified on 15.205(a), then the 15.209(a) limit in the table below has to be followed.

Frequency	Field Strength	Distance	Field Strength Limit at 3m Distance	
(MHz)	uV/m	(m)	uV/m	dBuV/m
0.009 ~ 0.490	2400/F(kHz)	300	10000 * 2400/F(kHz)	$20\log^{(2400/F(kHz))} + 80$
0.490 ~ 1.705	24000/F(kHz)	30	100 * 24000/F(kHz)	$20\log^{(24000/F(kHz))} + 40$
1.705 ~ 30	30	30	100 * 30	$20\log^{(30)} + 40$
30 ~ 88	100	3	100	$20\log^{(100)}$
88 ~ 216	150	3	150	$20\log^{(150)}$
216 ~ 960	200	3	200	$20\log^{(200)}$
Above 960	500	3	500	$20\log^{(500)}$

Receiver Parameter	Setting
Attenuation	Auto
Start ~ Stop Frequency	9kHz~150kHz / RB 200Hz for QP
Start ~ Stop Frequency	150kHz~30MHz / RB 9kHz for QP
Start ~ Stop Frequency	30MHz~1000MHz / RB 120kHz for QP

Below 1GHz test procedure as below:

a. The EUT was placed on the top of a rotating table 0.8 meters above the ground at a 3 meter semi-anechoic camber. The table was rotated 360 degrees to determine the position of the highest radiation.

b. The EUT was set 3 meters away from the interference-receiving antenna, which was mounted on the top of a variable-height antenna tower.

c. The antenna height is varied from one meter to four meters above the ground to determine the maximum value of the field strength. Both horizontal and vertical polarizations of the antenna are set to make the measurement.

d. For each suspected emission, the EUT was arranged to its worst case and then the antenna was tuned to heights from 1 meter to 4 meters (for the test frequency of below 30MHz, the antenna was tuned to heights 1 meter) and the rotatable table was turned from 0 degrees to 360 degrees to find the maximum reading.

e. The test-receiver system was set to Peak Detect Function and Specified Bandwidth with Maximum Hold Mode.

f. If the emission level of the EUT in peak mode was 10dB lower than the limit specified, then testing could be stopped and the peak values of the EUT would be reported. Otherwise the emissions that did not have 10dB margin would be re-tested one by one using peak, quasi-peak or average method as specified and then reported in a data sheet.

Above 1GHz test procedure as below:

g. Different between above is the test site, change from Semi- Anechoic Chamber to fully Anechoic Chamber and change form table 0.8 metre to 1.5 metre(Above 18GHz the distance is 1 meter and table is 1.5 metre).

h. Test the EUT in the lowest channel ,the middle channel ,the Highest channel.

Note:

Both horizontal and vertical antenna polarities were tested and performed pretest to three orthogonal axis. The worst case emissions were reported.

7.4 EUT operating Conditions

The EUT was configured for testing in a typical fashion (as a customer would normally use it). The EUT has been programmed to continuously transmit during test. This operating condition was tested and used to collect the included data.

7.5 Test Result

Frequency	Meter Reading	Factor	Emission Level	Limits	Margin	Detector Type
(MHz)	(dBμV)	(dB)	(dBμV/m)	(dBμV/m)	(dB)	
0.634	20.37	20.94	41.31	71.56	-30.25	QP
1.453	15.33	20.86	36.19	64.36	-28.17	QP
1.617	17.22	20.73	37.95	63.43	-25.48	QP
3.234	15.65	20.58	36.23	69.54	-33.31	QP
6.633	18.69	20.07	38.76	69.54	-30.78	QP
19.145	17.66	19.11	36.77	69.54	-32.77	QP

Note:
Pre-scan in the all of mode, the worst case in of was recorded.
Factor = antenna factor + cable loss – pre-amplifier.
Margin = Emission Level- Limit.

Measurements were performed at 3 metres and results extrapolated to 30 metres.

The limit is specified at a test distance of 30 metres. However, as specified by FCC Section 15.31 (f)(2), measurements may be performed at a closer distance and the measured level corrected to the specified measurement distance by making the measurements at a minimum of two distances on at least one radial to determine the proper extrapolation factor.

The amplitude of spurious emissions which are attenuated by more than 20dB below the permissible value has no need to be reported.
Distance extrapolation factor =40 log (specific distance/test distance)(dB);
Limit line = specific limits(dBuv) + distance extrapolation factor.

Between 30MHz – 1GHz

Temperature:	26℃	Relative Humidtity:	54%
Pressure:	101 kPa	Test Voltage :	DC 6V
Test Mode :	Mode 4	Polarization :	Horizontal

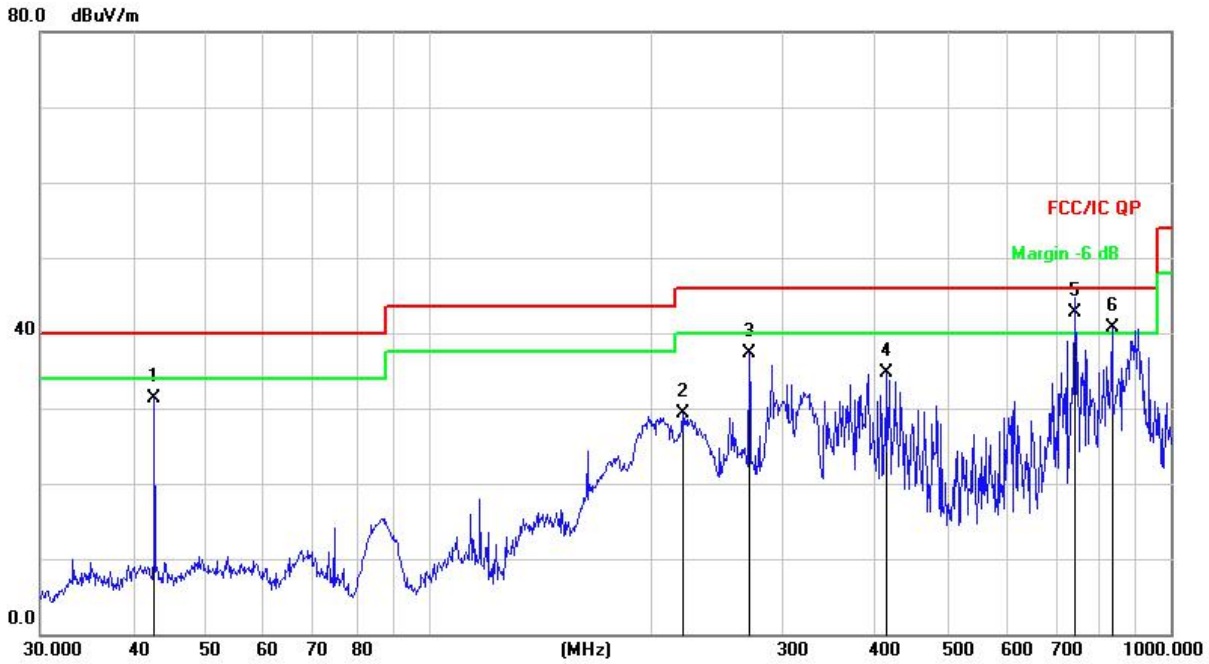

Remark:
Factor = Antenna Factor + Cable Loss – Pre-amplifier.

No.	Mk.	Freq.	Reading Level	Correct Factor	Measure-ment	Limit	Over	
		MHz	dBuV	dB	dBuV/m	dB/m	dB	Detector
1		42.7496	46.52	-15.26	31.26	40.00	-8.74	QP
2		219.8449	45.08	-15.84	29.24	46.00	-16.76	QP
3		270.3748	51.90	-14.52	37.38	46.00	-8.62	QP
4		414.7223	45.41	-10.76	34.65	46.00	-11.35	QP
5	*	742.2587	47.11	-4.46	42.65	46.00	-3.35	QP
6	!	833.3171	43.51	-2.89	40.62	46.00	-5.38	QP

Temperature:	26℃	Relative Humidtity:	54%
Pressure:	101 kpa	Test Voltage :	DC 6V
Test Mode :	Mode 4	Polarization :	Vertical

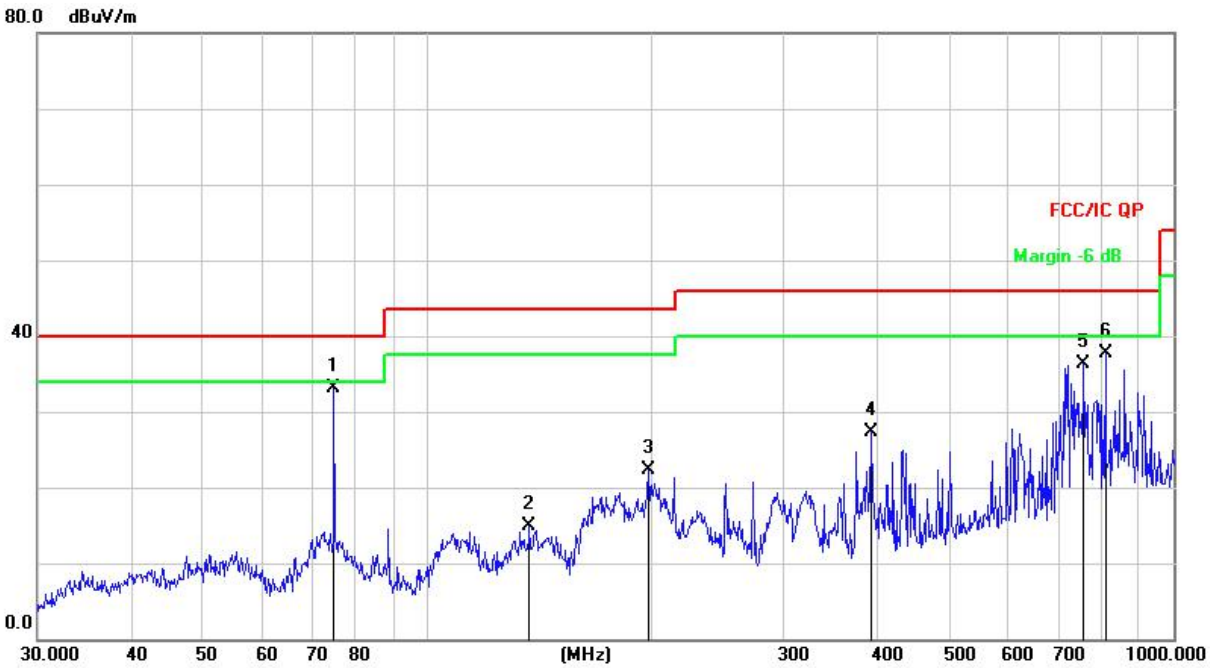

Remark:
Factor = Antenna Factor + Cable Loss – Pre-amplifier.

No.	Mk.	Freq.	Reading Level	Correct Factor	Measure-ment	Limit	Over	
		MHz	dBuV	dB	dBuV/m	dB/m	dB	Detector
1	*	74.9191	52.34	-19.28	33.06	40.00	-6.94	QP
2		136.9391	33.58	-18.66	14.92	43.50	-28.58	QP
3		197.8926	38.74	-16.43	22.31	43.50	-21.19	QP
4		393.4723	38.46	-11.24	27.22	46.00	-18.78	QP
5		758.0407	40.56	-4.23	36.33	46.00	-9.67	QP
6		810.2653	41.18	-3.41	37.77	46.00	-8.23	QP

8. RADIATED BAND EMISSION MEASUREMENT

8.1 Block Diagram Of Test Setup

Radiated Emission Test-Up Frequency Below 30MHz

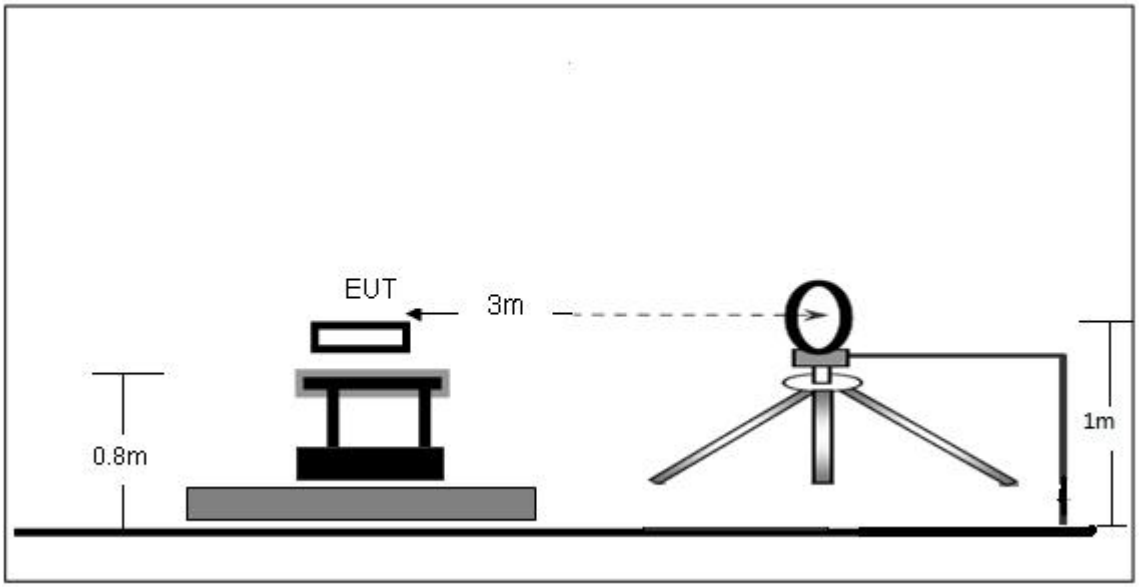

8.2 Limit

FCC Part15 C Section 15.209 and 15.225

LIMITS OF RADIATED EMISSION MEASUREMENT (Below 30MHz)

a. 15.848 microvolts/m (84 dBμ V/m) at 30 m, within the band 13.553– 13.567 MHz.

b. 334 microvolts/m (50.5 dBμ V/m) at 30 m, within the bands 13.410– 13.553 MHz and 13.567– 13.710 MHz.

c. 106 microvolts/m (40.5 dBμ V/m) at 30 m, within the bands 13.110– 13.410 MHz and 13.710– 14.010 MHz.

d. 30 microvolts/m (29.5 dBμ V/m) at 30 m, outside the band 13.110– 14.010 MHz.

Notes:

(1) The limit for radiated test was performed according to FCC PART 15C.

(2) The tighter limit applies at the band edges.

(3) Emission level (dBuV/m)=20log Emission level (uV/m).

8.3 Test procedure

a. The Product is placed on a turntable 0.8 meters above the ground in the chamber, 3 meter away from the antenna (loop antenna). The maximum values of the field strength are recorded by adjusting the polarizations of the test antenna and rotating the turntable.

b. For each suspected emission, the Product was arranged to its worst case and then turn table was turned from 0 degrees to 360 degrees to find the maximum reading.

c. The test frequency analyzer system was set to Peak Detect (300Hz RBW in 9kHz to 150kHz and 10kHz RBW in 150kHz to 30MHz) Function and Specified Bandwidth with Maximum Hold Mode.

8.4 EUT operating Conditions

The EUT tested system was configured as the statements of 4.2 Unless otherwise a special operating condition is specified in the follows during the testing.

The report only show the worst antenna Polarity's data.

8.5 Test Result

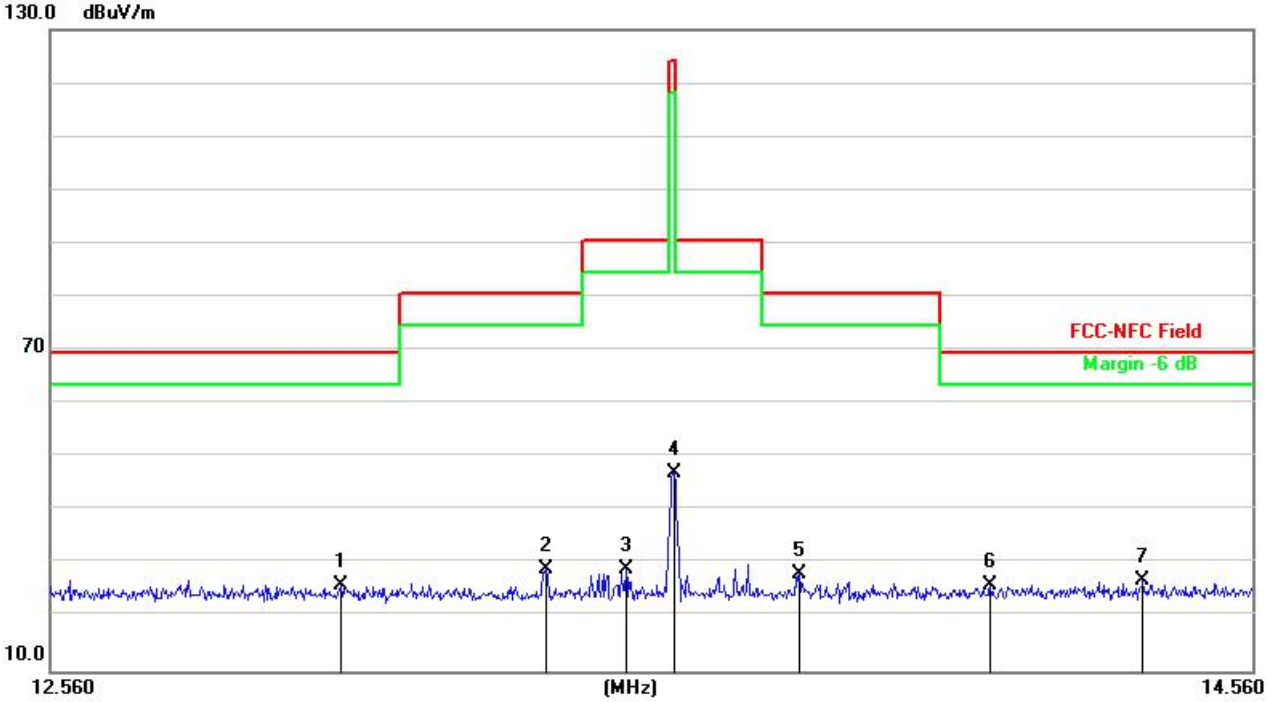

No.	Mk.	Freq.	Reading Level	Correct Factor	Measure-ment	Limit	Over	
		MHz	dBuV	dB	dBuV/m	dB/m	dB	Detector
1		13.0180	36.50	-10.34	26.16	69.40	-43.24	peak
2		13.3520	39.33	-10.29	29.04	80.50	-51.46	peak
3		13.4820	39.40	-10.27	29.13	90.50	-61.37	peak
4		13.5620	57.32	-10.26	47.06	124.0	-76.94	peak
5		13.7720	38.52	-10.23	28.29	80.50	-52.21	peak
6		14.1000	36.14	-10.18	25.96	69.50	-43.54	peak
7	*	14.3660	37.16	-10.14	27.02	69.50	-42.48	peak

Note:
Factor = antenna factor + cable loss – pre-amplifier.
Margin = Emission Level- Limit.

9. BANDWIDTH TEST

9.1 Block Diagram Of Test Setup

9.3 Test procedure

FCC Part15 (15.215)	
Section	Test Item
15.215	Bandwidth

1. Set RBW = 1% to 5% of the OBW
2. Set the video bandwidth (VBW) ≥RBW.
3. Detector = Peak.
4. Trace mode = max hold.
5. Sweep = auto couple.
6. Allow the trace to stabilize.
7. Measure the maximum width of the emission that is constrained by the frequencies associated with the two outermost amplitude points (upper and lower frequencies) that are attenuated by 20 dB relative to the maximum level measured in the fundamental emission.

9.4 EUT operation conditions

The EUT tested system was configured as the statements of 4.2 Unless otherwise a special operating condition is specified in the follows during the testing.

9.5 Test Result

Temperature：	26℃	Relative Humidity：	54%
Test Mode ：	Mode 1	Test Voltage ：	DC 6V

Frequency (MHz)	20dB bandwidth (Hz)
13.56	216

TX CH 01

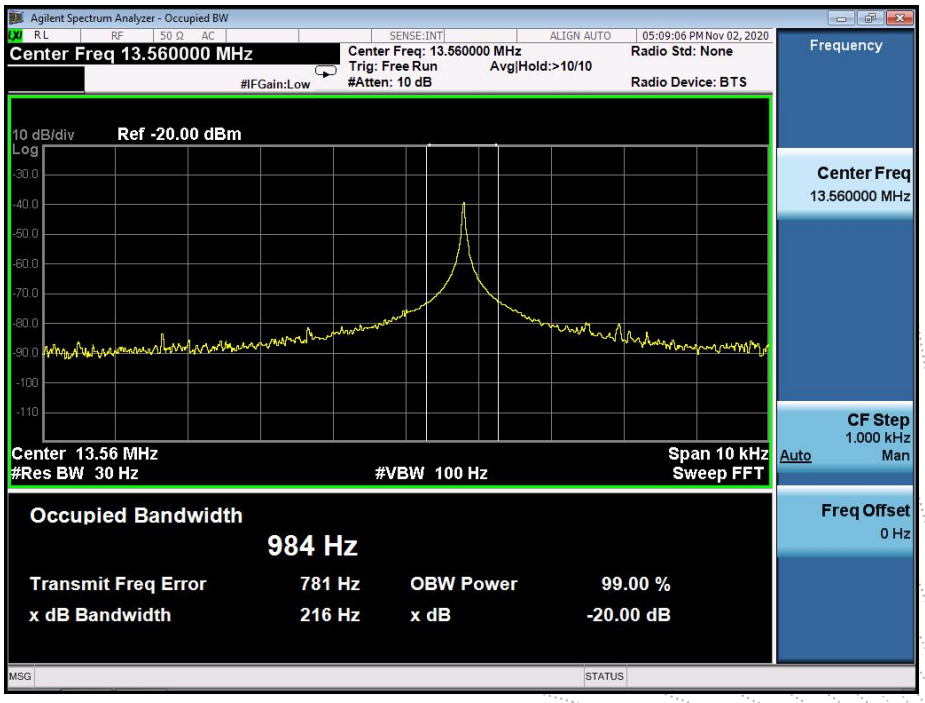

10. TRANSMITTER FREQUENCY STABILITY

10.1 Block Diagram Of Test Setup

10.2 Limit

The frequency tolerance of the carrier signal shall be maintained within ±0.01% of the operating frequency over a temperature variation of -20 degrees to +50 degrees C at normal supply voltage, and for a variation in the primary supply voltage from 85% to 115% of the rated supply voltage at a temperature of 20 degrees C. For battery operated equipment, the equipment tests shall be performed using a new battery.
Limit: ±0.01% of 13.56MHz=1356Hz

10.3 Test procedure

1. Set RBW = 10 kHz.
2. Set the video bandwidth (VBW) ≥RBW.
3. Detector = Peak.
4. Trace mode = max hold.
5. Sweep = auto couple.
6. Allow the trace to stabilize.
7. The transmitter output (antenna port) was connected to the spectrum analyzer.

10.4 EUT operating Conditions

The EUT tested system was configured as the statements of 4.2 Unless otherwise a special operating condition is specified in the follows during the testing.

10.5 Test Result

Temperature：	26℃	Relative Humidity：	54%
Pressure：	101kPa	Test Voltage ：	DC 6V
Test Mode ：	Mode 1		

Test Conditions			Frequency Deviation		Result
Frequency MHz	Power(Vdc)	Temperature (℃)	Measured Freq. (MHz)	Frequency Error(Hz)	
13.56	6	-20	13.56002	20	PASS
	6	-10	13.56008	80	
	6	0	13.56004	40	
	6	10	13.56003	30	
	6	20	13.56008	80	
	6	30	13.56001	10	
	6	40	13.56002	20	
	6	50	13.56009	90	
	6.90	20	13.56004	40	
	5.10	20	13.56007	70	

11. ANTENNA REQUIREMENT

11.1 STANDARD REQUIREMENT

15.203 requirement: For intentional device, according to 15.203: an intentional radiator shall be designed to ensure that no antenna other than that furnished by the responsible party shall be used with the device.

11.2 EUT ANTENNA

The EUT antenna is Coil antenna, Antenna Gain is 0dBi. fulfill the requirement of this section.

12. EUT PHOTOGRAPHS

EUT Photo 1

EUT Photo 2

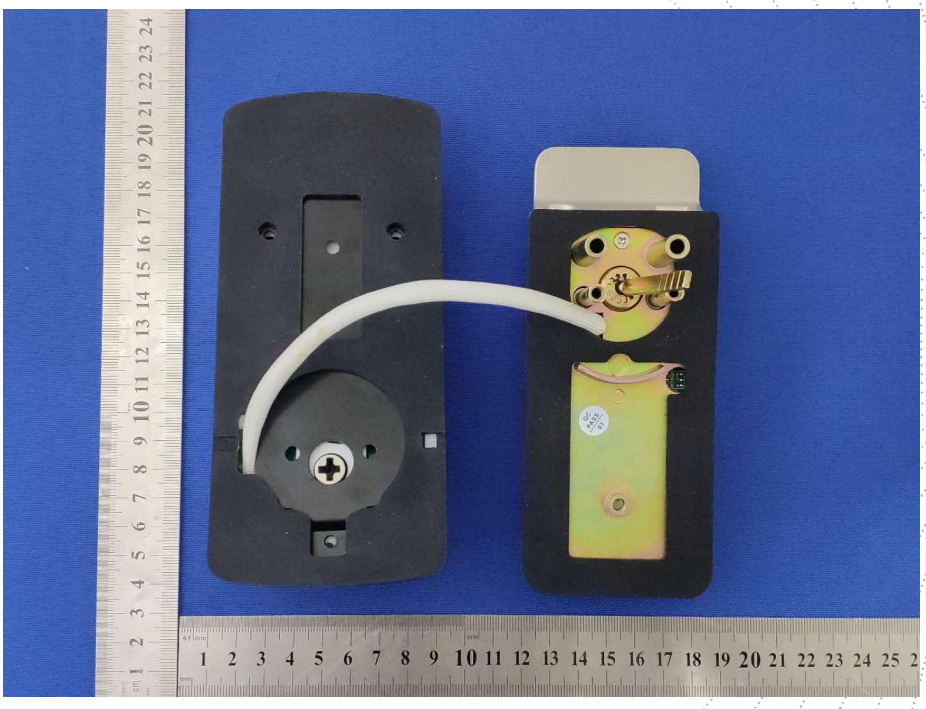

13. EUT TEST SETUP PHOTOGRAPHS

Radiated Measurement Photos

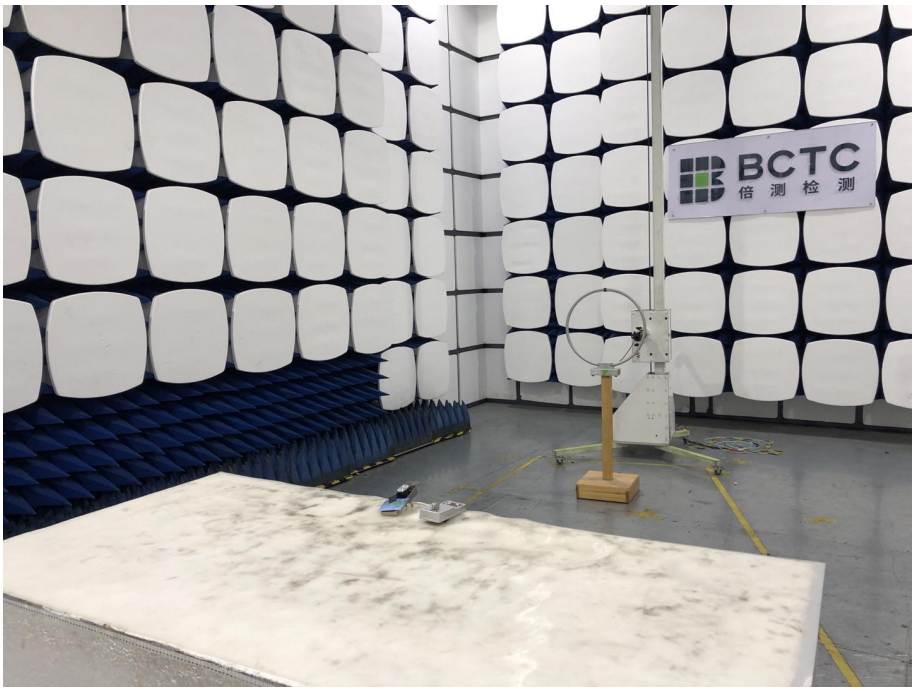

STATEMENT

1.The equipment lists are traceable to the national reference standards.

2.The test report can not be partially copied unless prior written approval is issued from our lab.

3.The test report is invalid without stamp of laboratory.

4.The test report is invalid without signature of person(s) testing and authorizing.

5.The test process and test result is only related to the Unit Under Test.

6.The quality system of our laboratory is in accordance with ISO/IEC17025.

7.If there is any objection to report, the client should inform issuing laboratory within 15 days from the date of receiving test report.

Address:
1-2F, East of B Building, Pengzhou Industrial Park, Fuyuan 1st Road, Qiaotou, Fuyong Street, Bao'an District,Shenzhen,Guangdong,China

TEL：400-788-9558

P.C.: 518103

FAX：0755-33229357

Website：http://www.bctc-lab.com

E-Mail：bctc@bctc-lab.com.cn

※※※※※ **END** ※※※※※