Instruction for Use
EPIA

CE 0068

Please read this manual carefully and thoroughly before using this device.
Do not use this device for other than intended purpose.

■ EN □ ES □ CS □ DA □ DE □ ET □ EL □ CZ □ RO □ MT □ RO □ PT

RIM science

This page is intentionally left blank.

Table of Contents

Chapter I. ABOUT MANUAL **2**
1. General Information 2
2. Revision History 2
3. Applicable Standards 3

Chapter II. PRODUCT DESCRIPTION **4**
1. Product Description 4
2. Intended Use 4
3. Principle of Operation 5
4. Features 5
5. Specification 6
6. Operating and Storage & Transport Conditions 7
7. Product Description 8
8. Symbols (Including Safety Signs) 11
9. Label and Packaging 13
10. Product Component (List of Critical Components) 17

Chapter III. HOW TO USE **18**
1. Preparation Before Use 18
2. Device Connection 19
3. Instruction to Use 23
4. Post-use Treatment 25
5. Storage and Transport Conditions 25

Chapter IV. WARNING AND SAFETY NOTICES **26**
1. General Precaution 26
2. General Warning 26
3. Interaction 26
4. Precaution to Use 27
5. Contraindications 27
6. Adverse Reaction 27
7. Warnings related to Wireless Communication 28
8. Guidance and Manufacturer's Declaration 29

Chapter V. MAINTENANCE **33**
1. Maintenance and Trouble Shootings 33
2. Disposal of the Electronic Device 33

Chapter VI. TECHNICAL CONTENTS **34**
1. Safety Information and Customer Service 34

Chapter I. About Manual

1. General Information

This manual is provided to help users to understand this device's characteristics as a medical device, method, and information for the safe use. For the proper and safe use of device, users must be fully aware of all the details given in this manual.

2. Revision History

Rev. No.	Rev. Date (YYYY.MM.DD)	Description
0	2020.08.11	New establishment

	RIMSCIENCE CO. Ltd. 601 (#602-1), 53, Chungjeong-ro, Seodaemun-gu, Seoul, Republic of Korea 03736 Tel. (+82) 2-3789-1010 Fax. (+82) 2-3789-1014 www.rimscience.com
EC REP	**slimbalance® GmbH** Hagenbrücke 1. D-38100 Braunschweig, Germany Tel.: (+49) 531-61499559 Email: info@slimbalance.de

3. Applicable Standards

The device complies with the following international standards.

No.	Standard No. (Reference document No.)	Title of Standard
1	93/42/EEC as amended by 2007/47/EC	Council Directive 93/42/EEC of 14 June 1993 concerning medical devices
2	EN ISO 13485:2016 (ISO 13485:2016)	Medical device – Quality management systems - Requirements for regulatory purposes
3	EN 60601-1:2006/A1:2013 (IEC 60601-1:2005)	Medical electrical equipment - Part 1: General requirements for basic safety and essential performance
4	EN 60601-1-2:2015 (IEC 60601-1-2:2014)	Medical electrical equipment - Part 1-2: General requirements for basic safety and essential performance - Collateral Standard: Electromagnetic disturbances - Requirements and tests
5	EN 60601-1-6:2010 (IEC 60601-1-6:2010)	Medical electrical equipment - Part 1-6: General requirements for basic safety and essential performance - Collateral standard: Usability
6	EN 62366:2008 (IEC 62366:2007)	Medical devices - Application of usability engineering to medical devices
7	EN 62304:2006 (IEC 62304:2006)	Medical device software - Software life-cycle processes
8	EN ISO 14971:2012 (ISO 14971:2007, Corrected version 2007-10-01)	Medical devices — Application of risk management to medical devices
9	EN 1041:2008	Information supplied by the manufacturer of medical devices
10	EN ISO 15223-1:2016 (ISO 15223-1:2016, Corrected version 2017-03)	Medical devices — Symbols to be used with medical device labels, labelling and information to be supplied — Part 1: General requirements
11	EN 301 489-1 V2.2.3 (2019-11)	ElectroMagnetic Compatibility (EMC) standard for radio equipment and services - Part 1: Common technical requirements - Harmonised Standard for ElectroMagnetic Compatibility
12	EN 301 489-17 V3.2.4 (2020-09)	ElectroMagnetic Compatibility (EMC) standard for radio equipment and services – Part 17: Specific conditions for Broadband Data Transmission Systems – Harmonised Standard for ElectroMagnetic Compatibility
13	MEDDEV 2.4/1 rev.9	Classification of medical devices
14	MEDDEV 2.7.1_rev 4	Clinical Evaluation: Guide for manufacturers and notified bodies
15	MEDDEV 2.12/1 rev.8	Guidelines on a Medical Devices Vigilance System
16	MEDDEV 2.12/2 rev.2	Post Market Clinical Follow-up studies

Chapter II. Product Description

1. Product Description

EPIA is a handheld device using internal power, which can hold a 5 mL syringe and an epidural needle. EPIA assists the epidural needle to be inserted and to approach to the epidural space. An operator can control the movement of the syringe and the insertion of epidural needle.

While the epidural needle is being inserted, a pressure sensor located in EPIA detects the change of pressure (Reaction force) applied to the tip of the needle, converts the pressure data of each tissue to digital data and indicates them as a graph on a display device.

The operator can determine the target injection site by monitoring the pressure change in the graph and can control or stop the movement of the epidural needle at the target site, which is the epidural space.

When needed, the device can be detached from the syringe, and the operator can inject an anesthetic directly or can insert an epidural catheter.

2. Intended Use

EPIA is an epidural instrument intended for use with an epidural needle for the real-time confirmation of the needle tip placement into the epidural space.

The device assists in the insertion of the needle into the epidural space by showing the needle insertion progress and the pressure data of each tissue as a graph of reaction force on a display device.

2.1. Patient Population

Adult (men or women)

2.2. Age

18 years of age and older

2.3. Application Part

Vertebra part

2.4. Intended Medical Indication

- Epidural anesthesia
- Pain control (labor analgesia)

2.5. Patient Contacting Part

None

2.6. Potential/Possible Adverse Reaction

- Cerebrospinal fluid leakage due to dural puncture
- Spinal nerve damage
- Pain in the treatment area

2.7. Contraindications

- Do not use on a patient with sepsis, bacteremia, injection site infection, severe hypovolemia, severe coagulation abnormalities, therapeutic anticoagulant therapy, increased intracranial pressure, and patient refusal.
- Do not use on a patient with neurological disorders, mental illness or dementia, aortic stenosis, left ventricular outflow tract obstruction (LVOTO), and congenital heart disease.

3. Principle of Operation

The product is used to assist with an epidural procedure that detects the epidural space by automatically pushing the syringe barrel to insert the epidural needle into the epidural space.

The motor rotates by using the electric power of a 3V battery, and the rotational motion is converted to a linear motion of the syringe barrel and the needle fixed to the syringe holder.

While the epidural needle is being inserted into the body, the pressure sensor in the syringe holder detects the pressure change between each tissue. The detected pressure change is converted and stored as digital data and displayed as a graph on the display device.

When the epidural needle is inserted into the body, the pressure will gradually increase in the subcutaneous and ligament tissue, and the pressure will rapidly drop when it reaches the epidural space. In this way, the operators can verify whether the needle tip has successfully entered into the epidural space.

4. Features

- Bluetooth communication or USB data transmitting
- Real-time graph via tablet PC
- Visualization of pressure and needle insertion length
- 5 mL syringe compatible
- Internally powered
- Steady and stable needle insertion
- Fine control of needle movement – Safety control button (0.2mm fine advance, stop, backward)
- Safety function – Automatic stop when the pressure detected is 50 gf lower than the maximal pressure detected.
- Applicable for various treatments accompanying epidural anesthesia and pain control

5. Specification

5.1. General Specifications

No	Category	Description
1	**Product Name**	Epidural Instrument
2	**Model Name**	EPIA-HU-B
3	**Brand Name**	EPIA
4	**Power Input**	Lithium Battery, 3Vdc
5	**Dimension**	Main body: 204.5 mm (L) X 41 mm (W) X 80 mm (H)
6	**Weight**	217 g
7	**Electric Shock Protection Type and Degree**	Internally powered, No Applied part
8	**Software Version**	Rims_EPI-A version 1.0.0

5.2. Technical Specification

No	Category	Description
1	**Max. Travel Distance**	45 mm ± 10 %
2	**Min. Travel Distance**	0.2 mm ± 10 %
3	**Moving Speed**	1.8 mm/s ± 10 %
4	**Operation**	Normal operation of Forward movement, Backward movement, Stop, and Fine advance
5	**Safety Function**	Automatic stop when the pressure detected is 50 gf lower than the maximal pressure detected.

5.3. RF Specification

No	Category	Description
1	**Frequency Range**	2,402 MHz ~ 2,480 MHz (Bluetooth Low Energy)
2	**Modulation Technique**	GFSK (Bluetooth Low Energy)
3	**Number of Channels**	40 Ch (Bluetooth Low Energy)

6. Operating and Storage & Transport Conditions

6.1. Operation Conditions

1) Temperature: 10 - 40 ℃
2) Relative humidity: 30 - 75 %
3) Atmospheric pressure: 800 - 1060 hPa

6.2. Storage & Transportation Conditions

1) Temperature: -20 - 60 ℃
2) Relative humidity: 10 - 90 %
3) Atmospheric pressure: 700 - 1060 hPa

7. Product Description

7.1. Appearance

7.1.1. Main Body

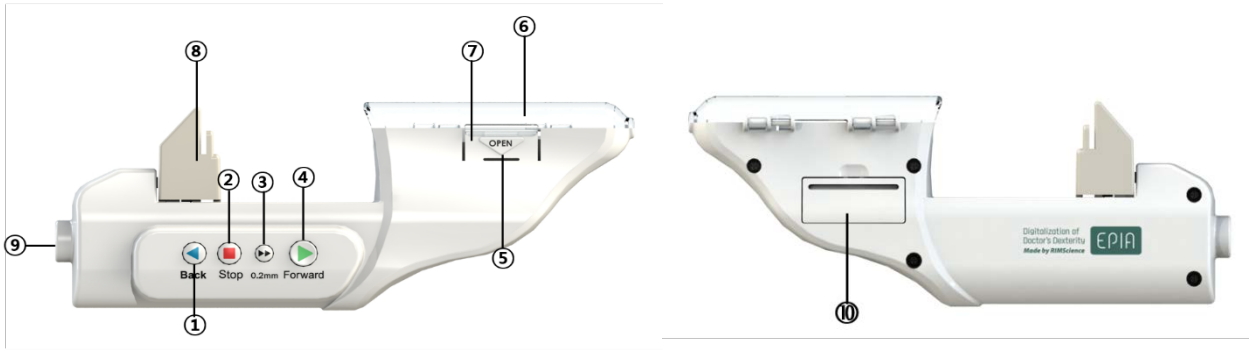

No	Component	Description
1	**Backward Button**	Button to move syringe and needle backward
2	**Stop Button**	Button to stop the movement of syringe and needle
3	**Fine advance (0.2mm) Button**	Button to advance syringe and needle for an additional 0.2 mm
4	**Forward Button**	Button to advance syringe and needle forward constantly
5	**Cover Open**	Button to open the syringe cover
6	**Cover**	Cover to fix the syringe and needle from falling out
7	**Lock**	Lock for syringe cover
8	**Syringe Holder**	Holder for syringe barrel flange
9	**Cable Connector**	Transmitting device data to a tablet PC via cable
10	**Battery Cover**	Cover to fix the 3V battery inserted according to the electrode

7.1.2. Accessories

No	Accessory	Description
1	Data Cable	Data transmitting USB cable to connect EPIA main body and tablet PC

7.1.3. Software

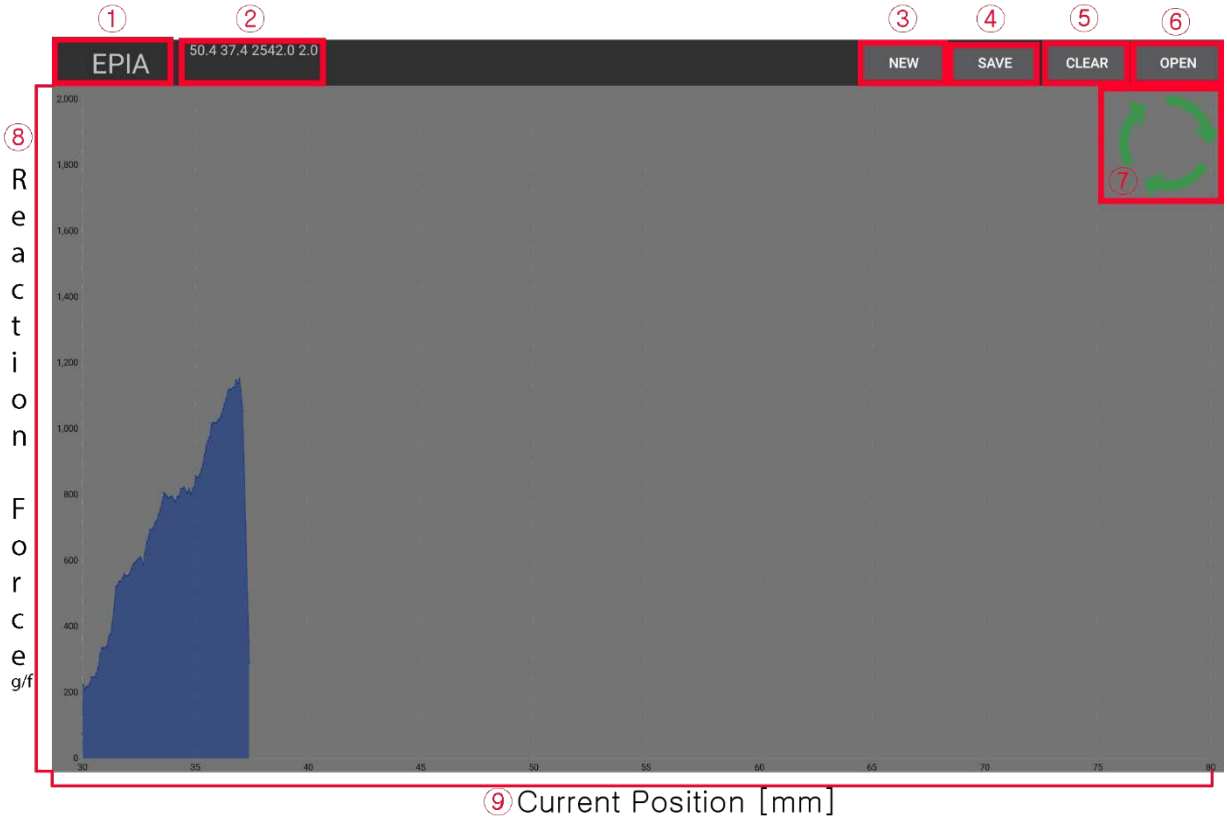

No	Name	Description
1	**EPIA Logo**	Data transmission and move to Settings Page
2	**Packet Information**	Packet data transmitted from EPIA
3	**NEW Button**	Move to initial display (Reset graph and patient information)
4	**Save Button**	Save current graph and data
5	**Clear Button**	Save current graph and reset the graph
6	**Open Button**	Opens a pop-up window of saved graph file list
7	**Needle Progress Direction**	Show the status and the direction of the needle movement - Green arrow rotating clockwise: needle moves forward - Red arrow rotating counterclockwise: needle moves backward - No rotation: needle stops
8	**Y-Axis**	Pressure (Reaction force) (gf) measured from the needle
9	**X-Axis**	Current position (mm) of needle (needle insertion length)
⚠	Files are saved with names as below: - Data file: YYMMDDhhmmss_S_[NAME]_[AGE].txt - Graph: YYMMDDhhmmss_S_[NAME]_[AGE].png	

7.2. Dimensions

7.2.1. Main Body

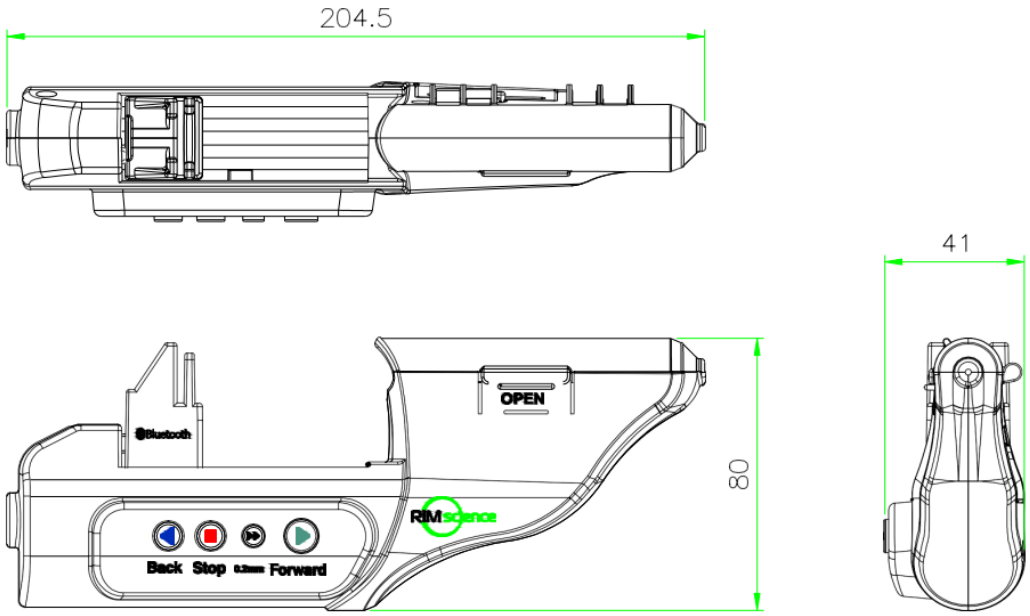

No	Name	Description	Part No.
1	**Main Body**	1) Dimension: 204.5 mm (L) X 41 mm (W) X 80 mm (H) 2) Weight: 217 g	EPIA-PL-B

7.2.2. Accessories

7.2.2.1 Data Cable

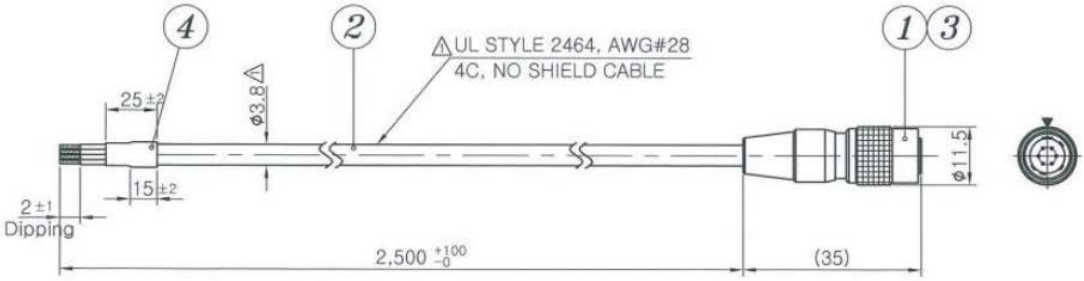

No	Name	Description	Part No.
1	**Data Cable**	1) Dimension: 2,500 mm (L) 2) Weight: 100 g	EPIA-CABLE

8. Symbols (Including Safety Signs)

Symbol	Title	Description
	Do Not Reuse	Indicates a medical device that is intended for one use, or for use on a single patient during a single procedure.
	Do Not Use if Package is Damaged	Indicates a medical device that should not be used if the package has been damaged or opened.
STERILE EO	**Sterilized Using Ethylene Oxide**	Indicates a medical device that has been sterilized using ethylene oxide gas.
	Do Not Re-sterilize	Indicates a medical device that is not to be re-sterilized.
	General Prohibition Sign	To signify a prohibited action.
	General Warning Sign	General warning sign.
	Caution	To indicate that caution is necessary when operating the device or control close to where the symbol is placed, or to indicate that the current situation needs.
	Manufacturer	Indicates the medical device manufacturer.
	Date of Manufacture	Indicates the date when the medical device was manufactured.
	Use-by-date	Indicates the date after which the medical device is not to be used.
LOT	**Batch Code (LOT)**	Indicates the manufacturer's batch code so that the batch or lot can be identified.
	Follow Instructions for Use	Indicates the need for the user to consult and follow the instructions for use.
REF	**Catalog Number**	Indicates the manufacturer's catalog number so that the medical device can be identified.
	Fragile, Handle with Care	Indicates a medical device that can be broken or damaged if not handled carefully.
	Keep Dry	Indicates a medical device that needs protection from moisture.
	Temperature Limit	Indicates the temperature limits to which the medical device can be safely exposed.
	Humidity Limitation	Indicates the range of humidity t which the medical device can be safely exposed.
	Atmospheric Pressure Limitation	Indicates the range of atmospheric pressure to which the medical device can be safely exposed.

Symbol	Title	Description
	Battery, General	On battery powered equipment.
	Waste Electrical and Electronic Equipment (WEEE)	Do not throw this unit into a municipal trash bin when this unit has reached the end of its lifetime. To ensure utmost protection of the global environment and minimize pollution, please recycle this unit.
	Non-ionizing Electromagnetic Radiation	Indicates the range of atmospheric pressure to which the medical device can be safely exposed.
EC REP	**Authorized Representative in the European Community**	Indicates the authorized representative in the European Community.
CE	**CE Marking**	The requirements of accreditation and market surveillance relating to the marketing of products.

9. Label and Packaging

9.1. Label

Please refer to “section 8 of Chapter II” to find more about symbols.

9.1.1. Product Label

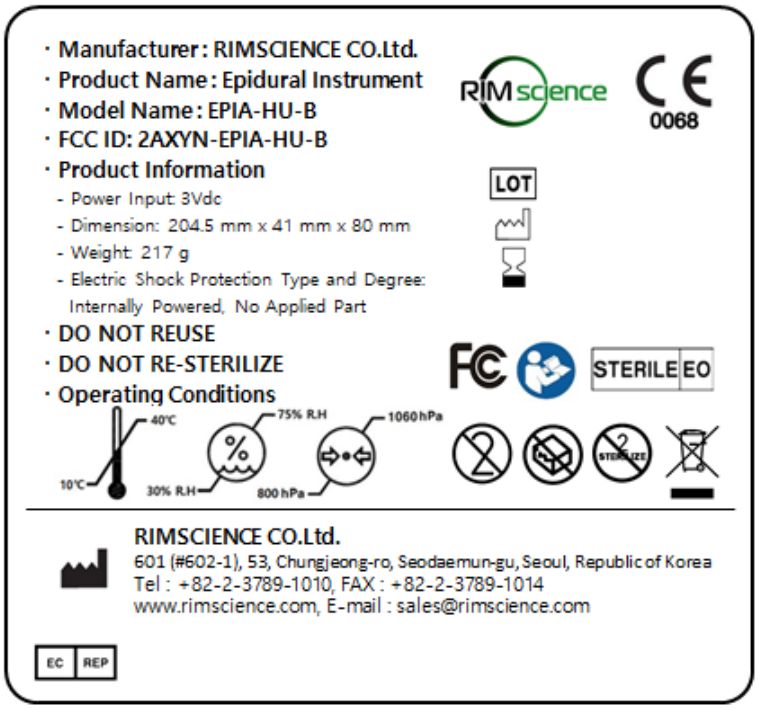

9.1.2. Packaging Label

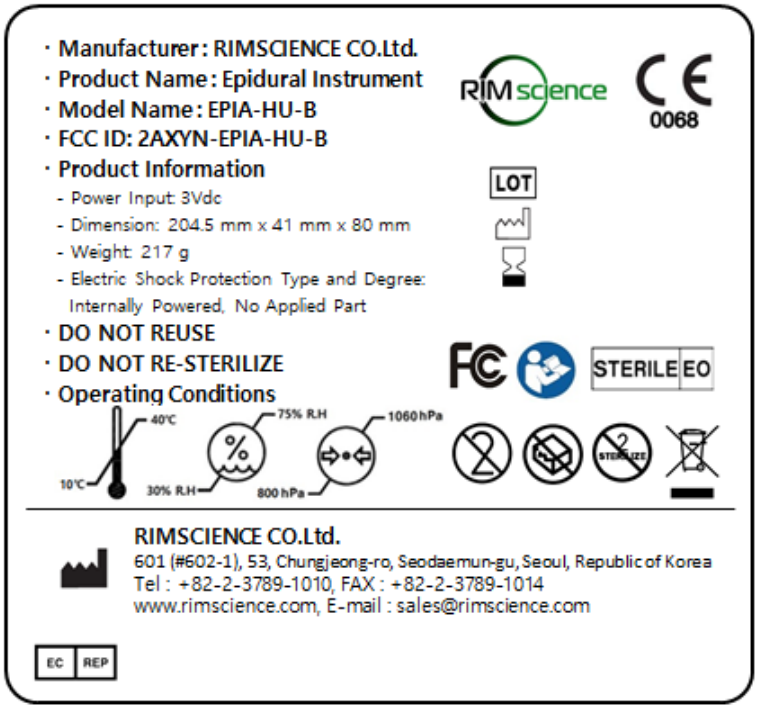

9.1.3. Accessory Label

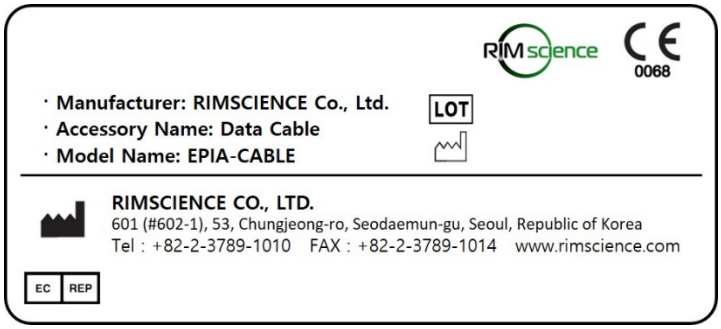

9.2. Packaging

9.2.1 Packaging Unit: 1 Set / box

- EPIA Main Body 1 ea + Accessory 1 Set + User Manual 1ea
- Accessory: 3V Battery 1 ea + Data Cable 1 ea

9.2.2 Packaging Material

- Inner Packaging (Blister): PET Blister + Tyvek paper
- Inner Packaging (Pouch): PE Film + Tyvek paper
- Inner Box : Paper (Manilla Paper)
- Outer Box: Carton box (Paper)

9.2.3 Dimension

- Inner packaging (Blister) (EPIA main body and 3V battery): 271 (L) X 41.5 (W) X 109 (H) (mm)
- Inner packaging (Pouch): 390 (L) X 180 (W) (mm)
- Inner box: 300 (L) X 135 (W) X 55 (H) (mm)
- Outer box: 325 (L) X 305 (W) X 325 (H) (mm)

9.2.4 Inner Packaging (Blister)

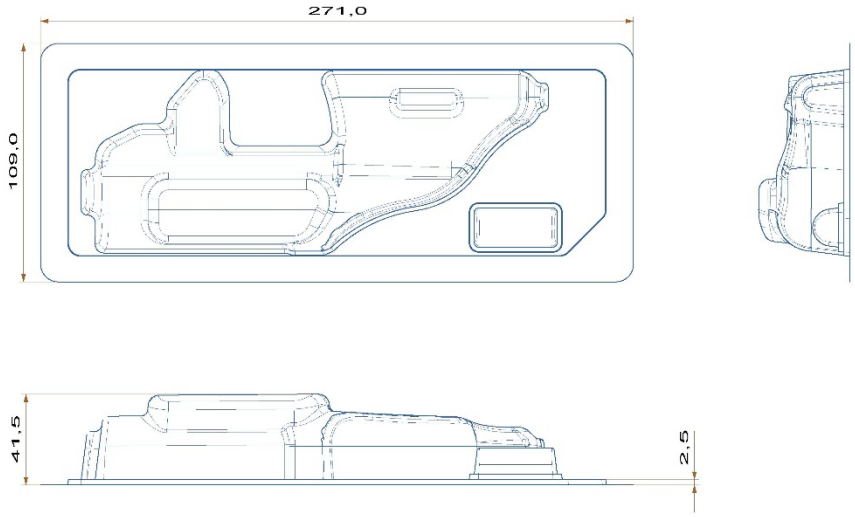

9.2.5 Inner Packaging (Pouch)

9.2.6 Inner Box

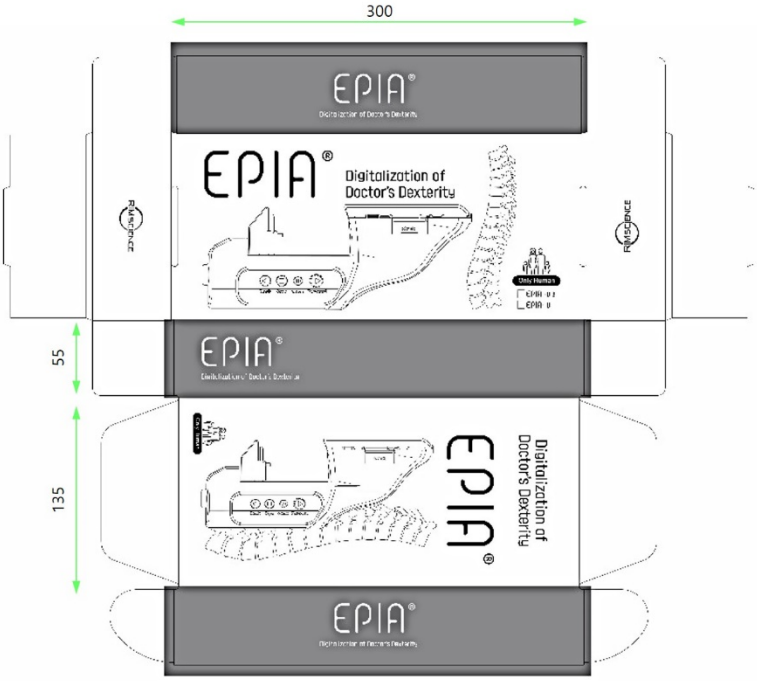

9.2.7 Outer Box

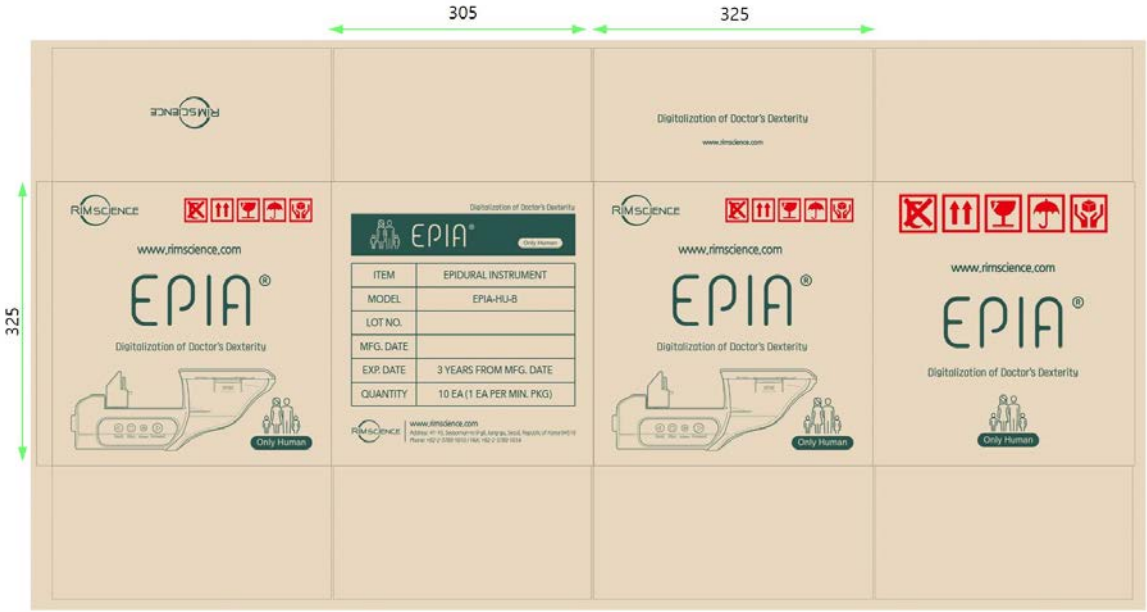

10. Product Components (List of Critical Components)

10.1. List of Critical Components

No	Component	Part reference	Manufacturer	Technical Data	Standard	Conformity Reference
1	Lithium Metal Battery	CR123A	Panasonic	3, 0 V, 1550 mAh	IEC 60086-4	CB(NL-64193)
2	Enclosure	AF365(&)	LG CHEM LTD	Min Thk : 1.7 mm V-1 60 °C	UL 94	UL(E67171)
3	PCB	FR4-74	ZHEJIANG WAZAM NEW MATERIALS CO., LTD.	Min Thk : 0.38 mm V-0 130 °C	UL 94	UL(E136069)
4	DC Motor	MJ-180PA-42	DONGGUAN MAJOR PRECITION MANUFAXTURING CO., LTD.	3 V	IEC 60601-1	Tested in equipment

10.2. Lifetime of Critical Component List

- Shelf life: 3 years

Chapter III. How to USE

1. Preparation Before Use

1.1. Training

- Before use, refer to the video or training materials provided by the manufacturer.
- The device must be used by well-trained, professional medical personnel for medical use only.
- The device requires sufficient training before use.

1.2. Preparation of the Device

- Prepare EPIA, 3V battery, USB cable (if needed), a display device, a 5 ml syringe, an epidural needle, and anesthetic (or saline) to be injected.
- Check whether the sterile packaging of EPIA is damaged and whether the product is deformed or damaged.
- Check if the environment is suitable for product use. Avoid a humid or wet place.
- Read manual and be sure to be fully aware of the device features and cautions before use.

Syringes and needles must use separate certified medical products.
Standard requirements (not included):
- Syringe 5 mL (KOVAX-SYRINGE (Korea Vaccine)),
- Epidural needle (Tuohy type puncture needle for epidural anesthesia (TaeChang Industrial))

1.3. Power Check

① Open the battery cover ⓐ on the left side of the EPIA.

② Insert the 3V battery ⓑ, according to the electrode mark (Left: (+) pole, Right: (-) pole).

When the battery is inserted properly, the device will be turned on, and the syringe holder will automatically move to the start (setting) position.

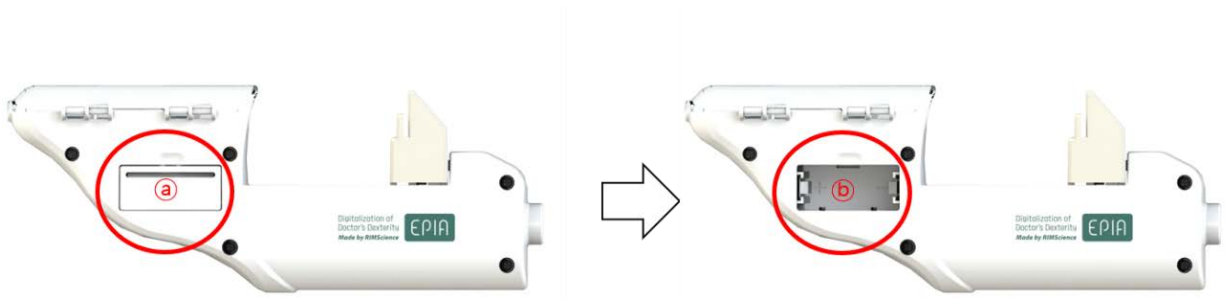

① ②

2. Device Connection

2.1. Bluetooth Connection

① Turn on the display device.

② Run the EPIA program.

③ Enter the patient information (Patient Name, Age, Gender).

④ Click the "CONNECT" button

on the upper right to connect the EPIA with the display device.

⑤ Click the "READ" button to complete the graph preparation.

2.2. USB Cable Connection (Option)

① Insert the USB Cable into the cable connector located at the back of the EPIA device.

② Connect the USB cable and a display device.

③ After connection, the following message appears.

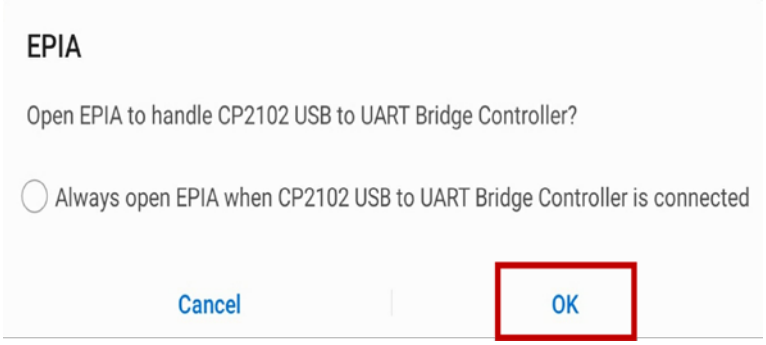

④ Click the OK button to start the program.

※ If you click the CANCEL button, EPIA will not be connected. Reconnect EPIA with USB cable, and press the OK button to start the program.

⑤ Enter the patient information (Patient Name, Age, Gender) and click the OK button to complete.

2.3. Screen Layout

2.3.1. Patient Information

※ You can only start the program by entering patient information (Patient Name, Age, and Gender).

2.3.2. Main Screen

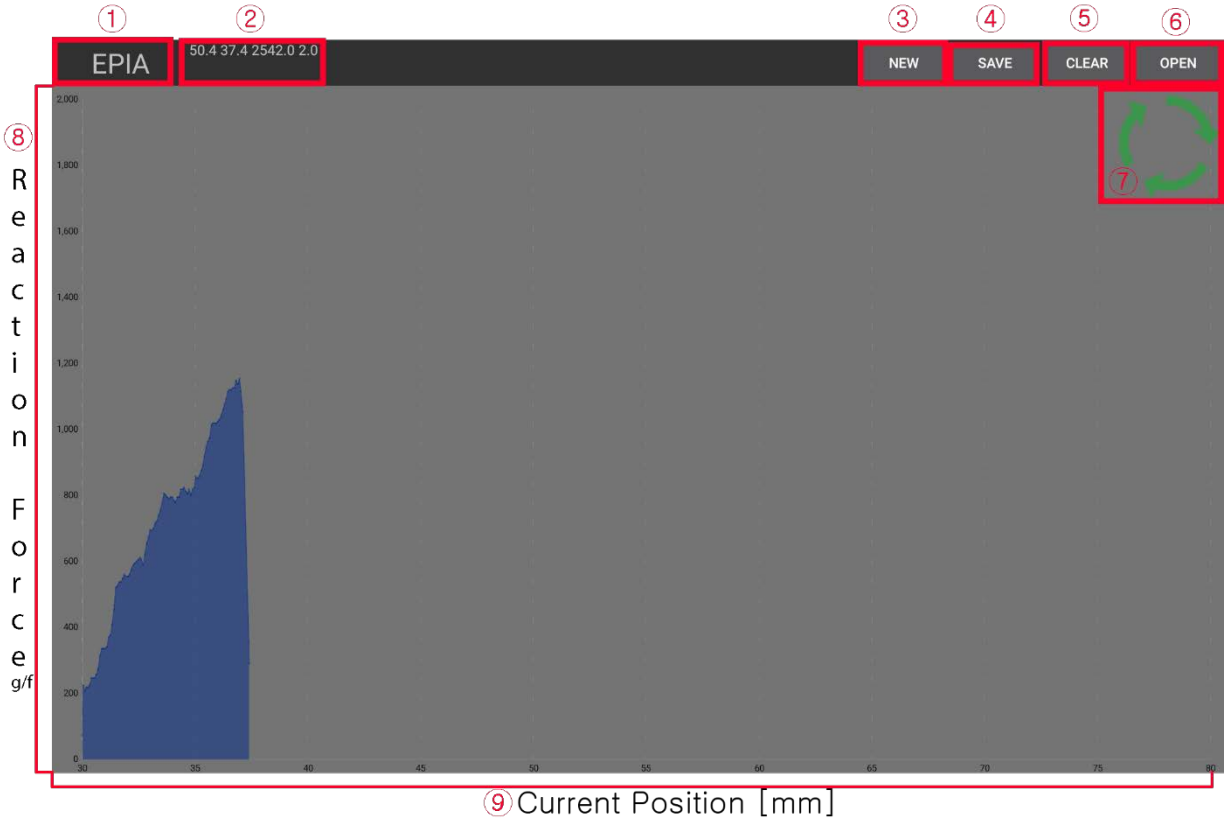

No	Name	Description
1	**EPIA Logo**	Data transmission and move to Settings Page
2	**Packet Information**	Packet data transmitted from EPIA
3	**NEW Button**	Move to initial display (Reset graph and patient information)
4	**Save Button**	Save current graph and data
5	**Clear Button**	Save current graph and reset the graph
6	**Open Button**	Opens a pop-up window of saved graph file list
7	**Needle Progress Direction**	Show the status and the direction of the needle movement - Green arrow rotating clockwise: needle moves forward - Red arrow rotating counterclockwise: needle moves backward - No rotation: needle stops
8	**Y-Axis**	Reaction force (gf) measured from the needle
9	**X-Axis**	Current position (mm) of needle (needle insertion length)

※ Files are saved with names as below:

- Data file: YYMMDDhhmmss_S_[NAME]_[AGE].txt
- Graph: YYMMDDhhmmss_S_[NAME]_[AGE].png

2.3.3. File Import

① Click the OPEN button on the top right of the main screen to open the file list.

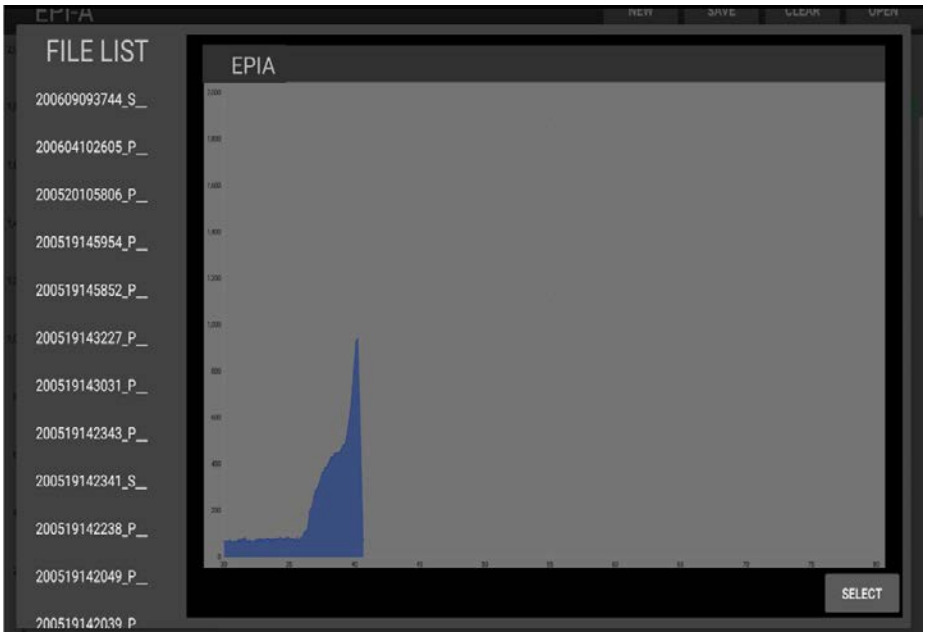

② Select a file from the file list and click the SELECT button to import the data.

③ When the selected file is imported, the data will appear on the screen.

④ To return to the patient information page, click the BACK button

⑤ To return to the file list, click the OPEN button.

3. Instruction to Use

① Prepare the sterilized EPIA device, an epidural needle, and a 5 ml syringe.
If needed, fill the syringe with saline or an anesthetic to be injected into the epidural space.

② Remove a stylet from the epidural needle.

③ Combine the syringe and the epidural needle.

④ Open the syringe cover of EPIA by pressing the OPEN button.

⑤ Insert the flange of the syringe barrel into the syringe holder of EPIA and place the needle in the groove in the front of the device.

④

⑤

⑥

⑥ Close the EPIA cover until it clicks and secure the syringe to avoid shaking.
※ When using a Tuohy type needle, insert the needle and syringe in the correct direction considering the bevel (slope) of the needle tip and the curved direction.

⑦ After connecting EPIA to the display device, start the program.

⑧ Before the start, check that the graph is located at the start (setting) position.
(The X and Y axes of the graph in the program are located at 0.)

⑨ Hold the EPIA firmly and fix it onto the patient's injection area with one hand (left hand recommended).
Operate the buttons of EPIA with the other hand (right hand recommended).

⑩ By pressing the Forward button , the syringe and the needle will automatically advance, and the needle will be inserted into the patient's body.

During the operation, make sure that the device is pressed firmly against the injection area to avoid being pushed back.

During the operation, the plunger is not affected, thereby the anesthetic is not injected while the needle is being inserted.

⑪ The pressure data are transmitted in real-time to the display device.
Through the pressure graph, the operator can monitor the intra-injection movement and the pressure change applied to the needle.

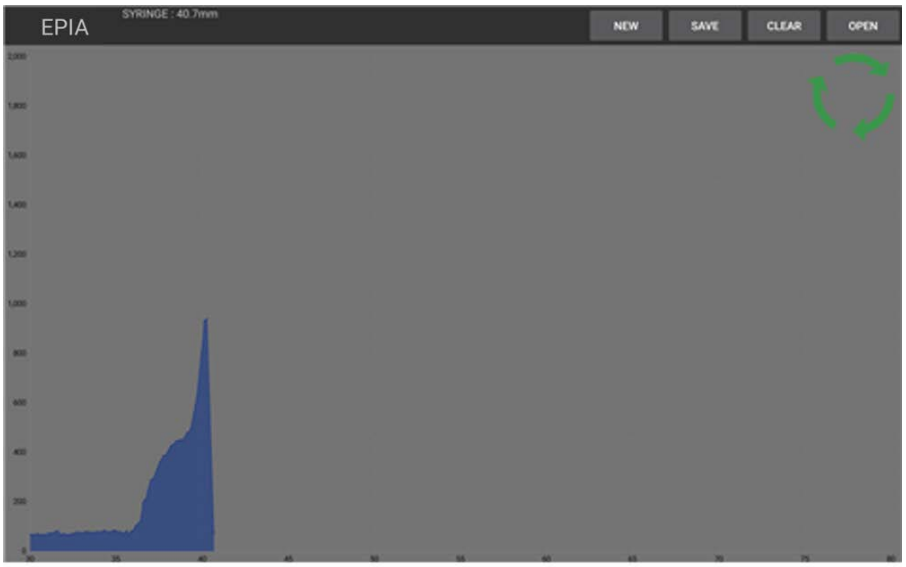

⑫ When the tip of the needle enters the epidural space, the pressure decreases rapidly. While monitoring the changes in the pressure graph, the operator can stop the progress of the needle by pressing the STOP button .

By detecting a rapid drop in pressure, the device will automatically stop at the epidural space. The operator can confirm that the pressure is constantly kept low by pressing the 0.2 mm button, thereby confirming that the automatic stop point coincides with the epidural space.

⑬ **After the stop, if additional progress is required, press the 0.2mm button to advance the needle finely.**

If a withdrawal is required, press the Back button to move the needle backward.

⑭ **When the needle is located at the epidural space, open the syringe cover, and remove the EPIA device from the syringe.**

Remove the EPIA carefully so that the tip of the needle located in the epidural space does not deviate from its proper position.

The operator can confirm whether the needle has reached the epidural space successfully by using the Loss of Resistance (LOR) Method, manually pressing the plunger to check the pressure within the syringe.

⑮ Push the plunger of the syringe to inject the required amount of anesthetic or remove the syringe from the needle. After the removal, an epidural catheter can be inserted into the epidural space through the epidural needle that is inserted into the treatment area.

4. Post-use Treatment

- EPIA device is single-use only; do not reuse the used device.
- Do not attempt to re-sterilize the device.
- Dispose used device according to hospital or government regulations regarding medical devices.
- After the use, wipe the cable clean with a disinfectant or disinfect it appropriately according to hospital regulations.
- Syringe and needle are disposable; do not reuse them.

5. Storage and Transport Conditions

- Storage and transport temperature: -20 - 60 ℃
- Avoid wet or humid places and store in a well-ventilated place.
- Avoid exposure to extreme temperature changes, humidity, dust, or corrosive vapors.
- Do not store in chemical storage areas or gas generation areas.
- Keep out of direct sunlight. Long exposure to sunlight can damage some parts.

Chapter IV. Warning and Safety Notices

1. General Precaution

	Check whether the package is damaged before use.
	Check for any apparent deformation, discoloration, cracking, or foreign substances before use.
	Check the cleanliness and disinfection of the product before use.
	Check whether the device and other medical supplies are operating normally before use.
	Be sure to read and be aware of the instructions and cautions before use.
	After use, dispose of the device as medical waste.
	Do not use the product beyond the Use-by-date specified on the label.
	High temperature or liquid contact with the product is prohibited.
	In the event of malfunction, stop using immediately and contact a specialist.
	In the rare event of mechanical malfunctions, be aware of and press the Stop button immediately.

2. General Warning

	Use only by trained professional medical personnel.
	Do not use for other than its intended use.
	Only use for pharmaceutical treatment.
	Discard after use and avoid reuse.
	Do not disassemble, repair, or modify the product in any way.

3. Interaction

	Check suitability and compatibility with other medical supplies before use.
	Use sterile syringes and needles with this product.

	Use the supplied battery or CR123-A 3V battery.
	For wired communication with a tablet PC, use the supplied USB cable.
	For Bluetooth communication, use the devices within 10m^2 area and check whether there is any interference from other communication equipment.

4. Precaution to Use

	This product is a medical device, and the user cannot use it by modifying the product at will.
	It is an assistant device to assist doctor's operation.
	If an abnormality is detected during product operation, press the Stop button, or pull the product backward to remove it from the patient's body.
	In the event of anesthesia side effects, it is recommended to be carried out by a specialist, a facility or a transport system that can handle the situation.
	If static electricity or sudden high voltage occurs, the device may stop or return to the initial state. In this case, press the Back button to return the needle position to the initial state and start operation again.
	Do not touch the device with wet hands.
	Do not place the device in a humid or wet environment.
	Do not place the cable in humid or wet environment.

5. Contraindications

	Do not use on a patient with sepsis, bacteremia, injection site infection, severe hypovolemia, severe coagulation abnormalities, therapeutic anticoagulant therapy, increased intracranial pressure, and patient refusal.
	Do not use on a patient with neurological disorders, mental illness or dementia, aortic stenosis, left ventricular outflow tract obstruction (LVOTO), or congenital heart disease.

6. Adverse Reaction

- Cerebrospinal fluid leakage due to dural puncture
- Spinal nerve damage
- Pain in the treatment area

7. Warnings related to Wireless Communication

7.1. FCC Compliance Statement

This device complies with part 15 of the FCC rules. Operation is subject to the following two conditions:

(1) This device may not cause harmful interference, and

(2) this device must accept any interference received, including interference that may cause undesired operation.

7.2. FCC Interference Statement

This equipment has been tested and found to comply with the limits for a Class A digital device, pursuant to part 15 of the FCC Rules. These limits are designed to provide reasonable protection against harmful interference when the equipment is operated in a commercial environment. This equipment generates, uses, and can radiate radio frequency energy and, if not installed and used in accordance with the instruction manual, may cause harmful interference to radio communications. Operation of this equipment in a residential area is likely to cause harmful interference in which case the user will be required to correct the interference at his own expense.

7.3. FCC Radiation Exposure Statement

This equipment complies with RF exposure requirements set forth for an uncontrolled environment.

7.4. FCC Caution FCC Interference Statement

Any changes or modifications not expressly approved by the party responsible for compliance could void the user's authority to operate this equipment. This transmitter must not be co-located or operating in conjunction with any other antenna or transmitter.

8. Guidance and Manufacturer's Declaration

8.1 GUIDANCE AND MANUFACTURER'S DECLARATION – ELECTROMAGNETIC EMISSIONS

The device is intended for use in the electromagnetic environment specified below. The customer or the end user of the device should assure that it is used in such an environment.

Guidance and manufacturer's declaration – electromagnetic emissions		
Surgical System is intended for use in the electromagnetic environment specified below. The customer or the user should assure that it is used in such an environment		
Emissions test	**Compliance level**	**Electromagnetic environment - guidance**
RF emissions CISPR 11	**Group 1**	Radio Frequency Plasma Surgical System uses RF energy only for its internal function. Therefore, its RF emissions are very low and are not likely to cause any interference in nearby electronic equipment.
RF emissions CISPR 11	**Class B**	The Model ARS900 The devices are intended to be used by the doctor.
Harmonic emissions IEC 61000-3-2	**Class A**	
Voltage fluctuations/flicker emissions IEC 61000-3-3	**Compliance**	

8.2 Guidance and Manufacturer's Declaration - Electromagnetic Immunity

The device is intended for use in the electromagnetic environment specified below.
The customer or the end user of the device should assure that it is used in such an environment.

Guidance and manufacturer's declaration – electromagnetic immunity			
Surgical System is intended for use in the electromagnetic environment specified below. The customer or the user should assure that it is used in such an environment			
Immunity test	**EN 60601 Test level**	**Compliance level**	**Electromagnetic environment - guidance**
Electrostatic discharge (ESD) IEC 61000-4-2	±6 kV contact ±8 kV air	**±6 kV contact** **±8 kV air**	Floors :ceramic tile Humidity : 55 %.
Electrical fast transient/burst IEC 61000-4-4	±2 kV for power supply lines ±1 kV for input/output lines	**±2kVfor power supply lines** **±1 kV for input/output lines**	Mains power quality should be that of a typical commercial or hospital environment.
Surge IEC 61000-4-5	±1 kV differential mode ±2 kV common mode	**±1 kV differential mode** **±2 kV common mode**	Mains power quality should be that of a typical commercial or hospital environment.
Voltage dips, short interruptions and voltage variations on power supply input lines IEC 61000-4-11	<5 % U_T (>95 % dip in U_T) for 0,5 cycle 40 % U_T (60 % dip in U_T) for 5 cycles 70 % U_T (30 % dip in U_T) for 25 cycles <5 % U_T (>95 % dip in U_T) for 5 s	**<5 % U_T** **(>95 % dip in U_T) for 0,5 cycle** **40 % U_T** **(60 % dip in U_T) for 5 cycles** **70 % U_T** **(30 % dip in U_T) for 25 cycles** **<5 % U_T** **(>95 % dip in U_T) for 5 s**	Mains power quality should be that of a typical commercial or hospital environment. If the user of the Model
Power frequency (50/60 Hz) magnetic field IEC 61000-4-8	3 A/m	3 A/m	If image distortion occurs, it may be necessary to position the Surgical System further from sources of power frequency magnetic fields or to install magnetic shielding. The power frequency magnetic field should be measured in the intended installation location to assure that it is sufficiently low.

Guidance and manufacturer's declaration – electromagnetic immunity			
Surgical System is intended for use in the electromagnetic environment specified below. The customer or the user should assure that it is used in such an environment			
Immunity test	**EN 60601 Test level**	**Compliance level**	**Electromagnetic environment - guidance**
Conducted RF IEC 61000-4-6	3 Vrms 150 kHz to 80 MHz outside ISM bands	**3 Vrms** **150 kHz to 80 MHz**	Portable and mobile RF communications equipment should be used no closer to any part of the Radio Frequency Plasma Surgical System, including cables, than the recommended separation distance calculated from the equation applicable to the frequency of the transmitter. Field strengths from fixed RF transmitters, as deter-mined by an electromagnetic site survey a should be less than the compliance level in each frequency range. b Interference may occur in the vicinity of equipment marked with the following symbol:
Radiated RF IEC 61000-4-3	3 V/m 80 MHz to 2,5 GHz	**3 V/m** **80 MHz to 2,5 GHz**	

8.3 Recommended separation distance between portable and mobile RF communications equipment and the compatible device.

Guidance and manufacturer's declaration – electromagnetic immunity			
Surgical System is intended for use in an electromagnetic environment in which radiated RF disturbances are controlled. The customer or the user can help prevent electromagnetic interference by maintaining a minimum distance between portable and mobile RF communications equipment (transmitters) and the Surgical System as recommended below, according to the maximum output power of the communications equipment.			
Rated maximum output power of transmitter	**Separation distance according to frequency of transmitter (m)**		
	150kHz to 80MHz $d = 1{,}2\sqrt{P}$	**80 MHz to 800 MHz** $d = 1{,}2\sqrt{P}$	**800 MHz to 2,5 GHz** $d = 2{,}3\sqrt{P}$
0.01	0.12	0.12	0.23
0.1	0.38	0.38	0.73
1	1.2	1.2	2.3
10	3.8	3.8	7.3
100	12	12	23
For transmitters rated at a maximum output power not listed above, the recommended separation distance d in metres (m) can be estimated using the equation applicable to the frequency of the transmitter, where P is the maximum output power rating of the transmitter in watts (W) according to the transmitter manufacturer. NOTE 1 At 80 MHz and 800 MHz, the separation distance for the higher frequency range applies. NOTE 2 These guidelines may not apply in all situations. Electromagnetic propagation is affected by absorption and reflection from structures, objects and people			

Chapter V. Maintenance

1. Maintenance and Trouble Shooting

The Epidural Instrument (EPIA) is supplied sterile and intended for SINGLE USE ONLY. Do not clean, re-sterilize or reuse the epidural instrument.
This may result in product malfunction, failure, or patient injury and may expose the patient to the risk of transmitted infectious diseases. After use, discard with standard medical waste disposal practices.

1.1. Disposal of the Device

The Epidural Instrument (EPIA) is supplied sterile and intended for **SINGLE USE ONLY**.
Do not clean, re-sterilize, or reuse the epidural instrument.
After use, discard with the standard medical waste disposal practices.

1.2. Maintenance of Cable

1.2.1 Cleaning

After use, wipe the data cable with lint-free cloth soaked with 70 % Isopropyl Alcohol or Ethyl Alcohol.
Or disinfect the cable appropriately according to hospital guidelines.

1.2.2 Sterilization

Sterilize the data transmitting cable appropriately according to hospital practices.
The cable can be sterilized using Ethylene Oxide gas or plasma.
Do not sterilize with steam or dry heat as autoclave.

2. Disposal of the Electronic Device

	This symbol indicates that the waste of electrical and electronic equipment must not be disposed as unsorted municipal waste and must be collected separately. Please contact an authorized representative of the manufacturer for information concerning the decommissioning of your equipment.

Chapter VI. Technical Contents

1. Safety Information and Customer Service

Please call **RIMSCIENCE Co. Ltd.** Customer Service at **(+82) 2-3789-1010** or send an e-mail to **sales@rimscience.com.**
If you have any device returns or questions about the device, visit our website **www.rimscience.com** for details. Some limitations apply. Any refurbishments made outside of our facility will automatically void the warranty.

Copyright © 2020 RIMSCIENCE
All Rights Reserved