TEST REPORT

Product Name:	15W Fast Wireless Charging Roller Car Phone Holder
FCC ID:	2AXZN-CARMEL
Trademark:	N/A
Model Number:	CARMEL_CW1
Prepared For:	VICXXO GROUP LIMITED
Address:	B-1803, 606, Seobusaet-gil, Geumcheon-gu, Seoul, Korea
Manufacturer:	Dongguan Lingyi Technology Co., Ltd
Address:	No.3 Chuangxin Road, Qinghutou, Tangxia, Dongguan, Guangdong, China
Prepared By:	Shenzhen CTB Testing Technology Co., Ltd.
Address:	Floor 1&2, Building A, No. 26 of Xinhe Road, Xinqiao Community, Xinqiao Street, Baoan District, Shenzhen, Guangdong China
Sample Received Date:	Oct. 26, 2020
Sample tested Date:	Oct. 26, 2020 to Oct. 27, 2020
Issue Date:	Oct. 27, 2020
Report No.:	CTB201028041RFX
Test Standards	FCC Part 15 C
Test Results	PASS
Remark:	This is wireless charger radio test report.

Compiled by:	Reviewed by:	Approved by:
Arron Liu	Bin Mei	Rita Xiao / Director

The test report is effective only with both signature and specialized stamp. This result(s) shown in this report refer only to the sample(s) tested. Without written approval of Shenzhen CTB Testing Technology Co., Ltd. this report can't be reproduced except in full. The tested sample(s) and the sample information are provided by the client.

TABLE OF CONTENTS

1.GENERAL INFORMATION 3
1.1. Report information 3
1.2. Measurement Uncertainty 3
1.3. Test Facility 3
1.4. Test Uncertainty 4
2.PRODUCT DESCRIPTION 5
2.1. EUT Description 5
2.2. Block Diagram of EUT Configuration 5
2.3. Test Conditions 5
2.4. Description Of Support Units (Conducted Mode) 6
3.TEST RESULTS SUMMARY 6
4.TEST EQUIPMENT USED 7
4.1. MEASUREMENT INSTRUMENTS LIST 7
5.CONDUCTED EMISSION TEST 9
5.1. Block Diagram of Test Setup 9
5.2. Test Standard 9
5.3. Conducted Emission Limit 9
5.4. EUT Configuration on Test 9
5.5. Operating Condition of EUT 10
5.6. Test Procedure 10
5.7. Test Result 10
6.RADIATED EMISSION MEASUREMENT 13
6.1. Block Diagram of Test Setup 13
6.2. Test Standard 14
6.3. EMI Test Receiver Setup 14
6.4. Test Procedure 14
6.5. Test Result 14
7.OCCUPIED BANDWIDTH 18
7.1. Block Diagram of Test Setup 18
7.2. Rules and specifications 18
7.3. Test Procedure 18
7.4. Test Result 18
8.EUT TEST PHOTOS 20
9.EUT PHOTOS 22

1. GENERAL INFORMATION

1.1. Report information

1.1.1. This report is not a certificate of quality; it only applies to the sample of the specific product/equipment given at the time of its testing. The results are not used to indicate or imply that they are application to the similar items. In addition, such results must not be used to indicate or imply that CTB approves recommends or endorses the manufacture, supplier or use of such product/equipment, or that CTB in any way guarantees the later performance of the product/equipment.

1.1.2. The sample/s mentioned in this report is/are supplied by Applicant, CTB therefore assumes no responsibility for the accuracy of information on the brand name, model number, origin of manufacture or any information supplied.

1.1.3. Additional copies of the report are available to the Applicant at an additional fee. No third part can obtain a copy of this report through CTB, unless the applicant has authorized CTB in writing to do so.

1.2. Measurement Uncertainty

Available upon request.

1.3. Test Facility

Site Description

Name of Firm	:	Shenzhen CTB Testing Technology Co., Ltd.
Site Location	:	Floor 1&2, Building A, No. 26 of Xinhe Road, Xinqiao Community, Xinqiao Street, Baoan District, Shenzhen, Guangdong China

1.4. Test Uncertainty

Item	Uncertainty
Occupancy bandwidth	54.3kHz
Conducted output power Above 1G	0.9dB
Conducted output power below 1G	0.9dB
Power Spectral Density , Conduction	0.9dB
Conduction spurious emissions	2.0dB
Out of band emission	2.0dB
3m camber Radiated spurious emission(30MHz-1GHz)	4.6dB
3m chamber Radiated spurious emission(1GHz-18GHz)	5.1dB
3m chamber Radiated spurious emission(18GHz-40GHz)	3.4dB
humidity uncertainty	5.5%
Temperature uncertainty	0.63℃
frequency	1×10-7
Conducted Emission (150KHz-30MHz)	3.2 dB
Radiated Emission(30MHz ~ 1000MHz)	4.8 dB
Radiated Emission(1GHz ~6GHz)	4.9 dB

2. PRODUCT DESCRIPTION

2.1. EUT Description

Description	:	15W Fast Wireless Charging Roller Car Phone Holder
Model Number	:	CARMEL_CW1
Serial Model	:	N/A
Model Difference	:	N/A
Power Supply		AC charger: DC5.0V, 2A, 15W INPUT: 5V2A, 9V/2A OUTPUT: 15W
MAX wireless charger power		15000mW
Work Frequency	:	110-205KHz

2.2. Block Diagram of EUT Configuration

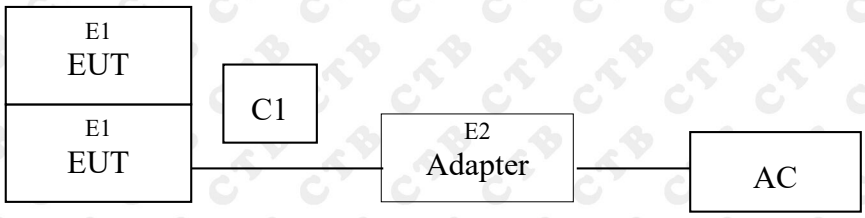

2.3. Test Conditions

Temperature: 23~25℃

Relative Humidity: 55~63 %

2.4. Description Of Support Units (Conducted Mode)

The EUT has been tested as an independent unit together with other necessary accessories or support units. The following support units or accessories were used to form a representative test configuration during the tests.

Item	Equipment	Mfr/Brand	Model/Type No.	Series No.	Note
E1	15W Fast Wireless Charging Roller Car Phone Holder	N/A	CARMEL_CW1	N/A	EUT

Item	Shielded Type	Ferrite Core	Length	Note

Note:

(1) The support equipment was authorized by Declaration of Confirmation.
(2) For detachable type I/O cable should be specified the length in cm in『Length』column.
(3) "YES" is means "shielded" "with core"; "NO" is means "unshielded" "without core".

3. TEST RESULTS SUMMARY

Table 1 Test Results Summary

Test Items	Test Results
Conducted disturbance	Pass
Radiated disturbance	Pass

Remark: "N/A" means "Not applicable."

4. TEST EQUIPMENT USED

4.1. MEASUREMENT INSTRUMENTS LIST

Item	Equipment	Manufacturer	Type No.	Serial No.	Last calibration	Calibrated until
1	Spectrum Analyzer	Agilent	N9020A	MY52090073	Oct. 17, 2020	Oct. 16, 2021
2	Power Sensor	Agilent	U2021XA	MY56120032	Nov. 02, 2019	Nov. 01, 2020
3	Power Sensor	Agilent	U2021XA	MY56120034	Nov. 02, 2019	Nov. 01, 2020
4	Communication test set	R&S	CMW500	118735	Nov. 02, 2019	Nov. 01, 2020
5	Spectrum Analyzer	R&S	FSP40	100550	Nov. 02, 2019	Nov. 01, 2020
6	Signal Generator	Agilent	N5181A	MY49060920	Nov. 03, 2019	Nov. 02, 2020
7	Signal Generator	Agilent	N5182A	MY47420195	Nov. 03, 2019	Nov. 02, 2020
8	Communication test set	R&S	CMU200	119978	Nov. 02, 2019	Nov. 01, 2020
9	band rejection filter	Shenxiang	MSF2400-2483.5MS-1154	20181015001	Nov. 02, 2019	Nov. 01, 2020
10	band rejection filter	Shenxiang	MSF5150-5850MS-1155	20181015001	Nov. 02, 2019	Nov. 01, 2020
11	band rejection filter	Xingbo	XBLBQ-DZA120	190821-1-1	Nov. 02, 2019	Nov. 01, 2020
12	BT&WI-FI Automatic test software	Micowave	MTS8310	Ver. 2.0.0.0	\	\
13	Rohde & Schwarz SFU Broadcast Test System	R&S	SFU	101017	Nov. 02, 2019	Nov. 01, 2020
14	Temperature humidity chamber	Hongjing	TH-80CH	DG-15174	Nov. 02, 2019	Nov. 01, 2020
15	234G Automatic test software	Micowave	MTS8200	Ver. 2.0.0.0	\	\
16	966 chamber	C.R.T.	966 Room	966	Nov. 10, 2019	Nov. 09, 2020
17	Receiver	R&S	ESPI	100362	Nov. 02, 2019	Nov. 01, 2020
18	Amplifier	HP	8447E	2945A02747	Nov. 03, 2019	Nov. 02, 2020
19	Amplifier	Agilent	8449B	3008A01838	Nov. 03, 2019	Nov. 02, 2020
20	TRILOG Broadband Antenna	Schwarzbeck	VULB 9163	869	Nov. 02, 2019	Nov. 01, 2020
21	Horn Antenna	Schwarzbeck	BBHA9120D	1911	Nov. 02, 2019	Nov. 01, 2020

22	Software	Fala	EZ-EMC	FA-03A2 RE	\	\
23	3-Loop Antenna	Daze	ZN30401	17014	Nov. 02, 2019	Nov. 01, 2020
24	loop antenna	ZHINAN	ZN30900A	/	Nov. 02, 2019	Nov. 01, 2020
25	Horn antenna	A/H/System	SAS-574	588	Nov. 02, 2019	Nov. 01, 2020
26	Amplifier	AEROFLEX	/	S/N/ 097	Nov. 02, 2019	Nov. 01, 2020

Conducted emissions Test					
Equipment	**Manufacturer**	**Model#**	**Serial#**	**Last Cal.**	**Next Cal.**
AMN	ROHDE&SCHWARZ	ESH3-Z5	831551852	Nov. 02, 2019	Nov. 01, 2020
Pulse limiter	ROHDE&SCHWARZ	ESH3Z2	357881052	Nov. 02, 2019	Nov. 01, 2020
EMI TEST RECEIVER	ROHDE&SCHWARZ	ESCS30	834115/006	Nov. 02, 2019	Nov. 01, 2020
Coaxial cable	ZDECL	Z302S	18091904	Nov. 02, 2019	Nov. 01, 2020
ISN	TESEQ	NTFM8158	NTFM8158#183	Nov. 02, 2019	Nov. 01, 2020
EMI TEST RECEIVER	ROHDE&SCHWARZ	ESCI	10428	Nov. 02, 2019	Nov. 01, 2020
Software	Fala	EZ-EMC	EMC-CON 3A1.1	\	\

5. CONDUCTED EMISSION TEST

5.1. Block Diagram of Test Setup

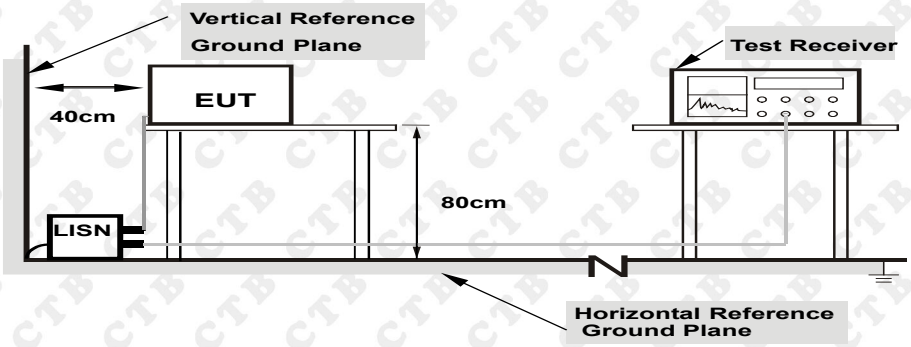

Note: 1.Support units were connected to second LISN.
2.Both of LISNs (AMN) are 80 cm from EUT and at least 80 from other units and other metal planes

The setup of EUT is according with per ANSI C63.10-2013 measurement procedure.
The specification used was with the FCC Part 15.207 limits.

5.2. Test Standard

FCC§15.207

5.3. Conducted Emission Limit

Frequency MHz	Limits dB(μV)	
	Quasi-peak Level	Average Level
0.15 ~ 0.50	66 ~ 56*	56 ~ 46*
0.50 ~ 5.00	56	46
5.00 ~ 30.00	60	50

Notes: 1. *Decreasing linearly with logarithm of frequency.

5.4. EUT Configuration on Test

The following equipments are installed on conducted emission test to meet FCC Part 15.207 requirement and operating in a manner, which tends to maximize its emission characteristics in a normal application.

5.5. Operating Condition of EUT

5.5.1. Setup the EUT and simulators as shown in Section 5.1.

5.5.2. Turn on the power of all equipments.

5.5.3. Let the EUT work in test modes (EUT Working) and test it.

5.6. Test Procedure

The EUT is put on a table of non-conducting material that is 80cm high. The vertical conducting wall of shielding is located 40cm to the rear of the EUT. The power line of the EUT is connected to the AC mains through a Artificial Mains Network (A.M.N.). A EMI test receiver (R&S Test Receiver ESHS30) is used to test the emissions form both sides of AC line. The bandwidth of EMI test receiver is set at 9kHz.

The bandwidth of the test receiver (R&S Test Receiver ESHS30) is set at 10KHz.

We pretest AC 120V and AC 240V, the worst voltage was AC 120V and the data recording in the report.

5.7. Test Result

PASS

Please refer to the following pages.

Temperature:	26 ℃	Relative Humidity:	54%
Pressure:	1010hPa	Phase :	L
Test Voltage :	AC 120V/60Hz	Test Mode:	Normal Link

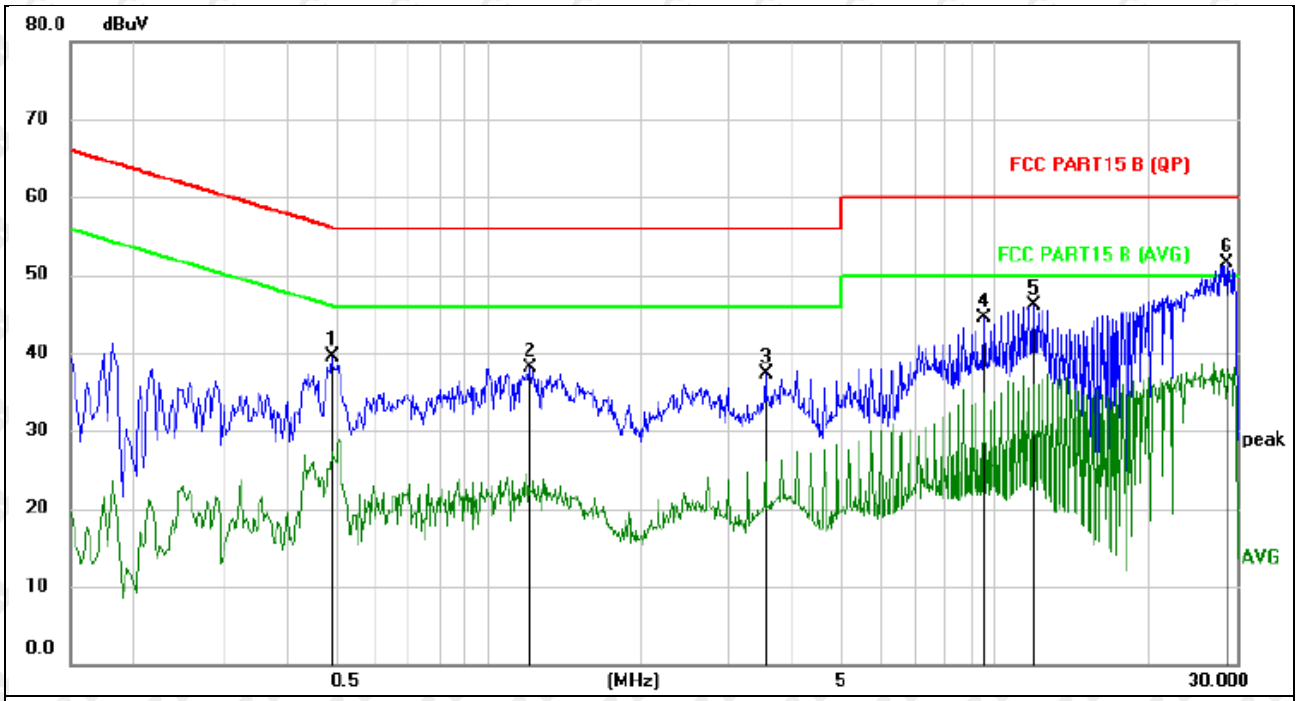

Remark:
1. All readings are Quasi-Peak and Average values.
2. Factor = Insertion Loss + Cable Loss.

No.	Mk.	Freq.	Reading Level	Correct Factor	Measure-ment	Limit	Margin	
		MHz	dBuV	dB	dBuV	dBuV	dB	Detector
1		0.4940	29.18	10.23	39.41	56.10	-16.69	peak
2		1.2140	28.05	10.15	38.20	56.00	-17.80	peak
3		3.5340	26.89	10.33	37.22	56.00	-18.78	peak
4		9.5140	33.80	10.62	44.42	60.00	-15.58	peak
5		11.9580	35.39	10.66	46.05	60.00	-13.95	peak
6	*	28.6740	40.82	10.68	51.50	60.00	-8.50	peak

Temperature:	26 ℃	Relative Humidity:	54%
Pressure:	1010hPa	Phase :	N
Test Voltage :	AC 120V/60Hz	Test Mode:	Normal Link

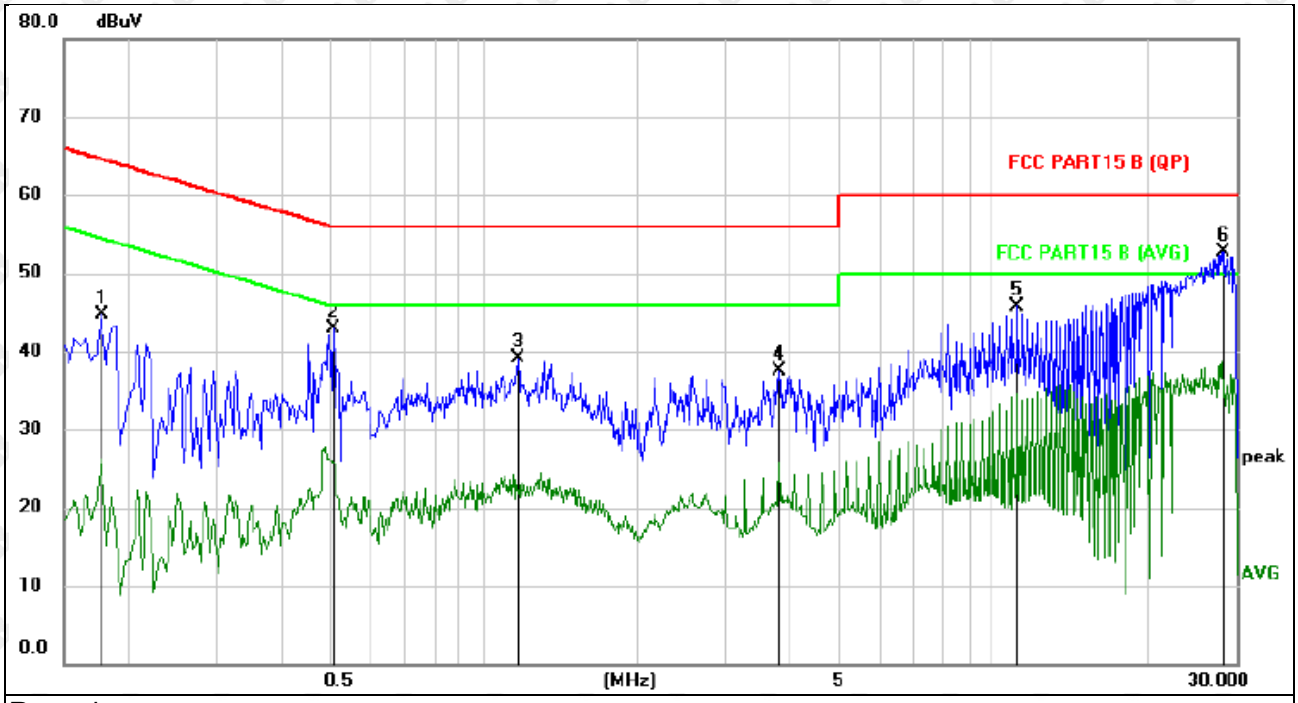

Remark:
1. All readings are Quasi-Peak and Average values.
2. Factor = Insertion Loss + Cable Loss.

No.	Mk.	Freq.	Reading Level	Correct Factor	Measure-ment	Limit	Margin	
		MHz	dBuV	dB	dBuV	dBuV	dB	Detector
1		0.1780	34.42	10.21	44.63	64.58	-19.95	peak
2		0.5100	32.88	10.05	42.93	56.00	-13.07	peak
3		1.1660	28.90	10.23	39.13	56.00	-16.87	peak
4		3.8060	27.28	10.32	37.60	56.00	-18.40	peak
5		11.1459	35.22	10.58	45.80	60.00	-14.20	peak
6	*	28.4020	42.06	10.66	52.72	60.00	-7.28	peak

6. RADIATED EMISSION MEASUREMENT

6.1. Block Diagram of Test Setup

6.1.1. Block Diagram of connection between the EUT and the simulators

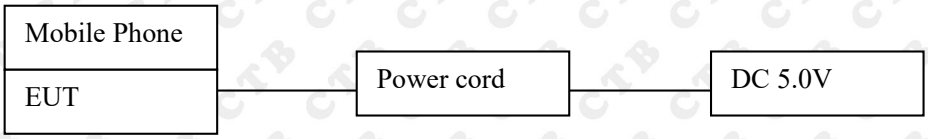

6.1.2. Anechoic Chamber Test Setup Diagram

（A）Radiated Emission Test-Up Frequency Below 30MHz

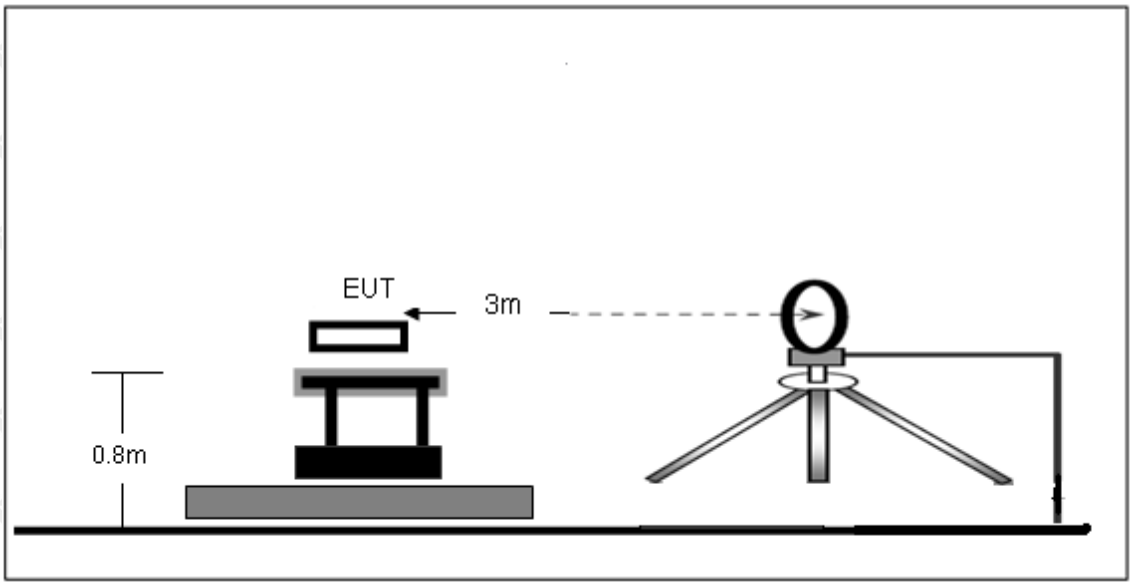

（B）Radiated Emission Test-Up Frequency 30MHz~1GHz

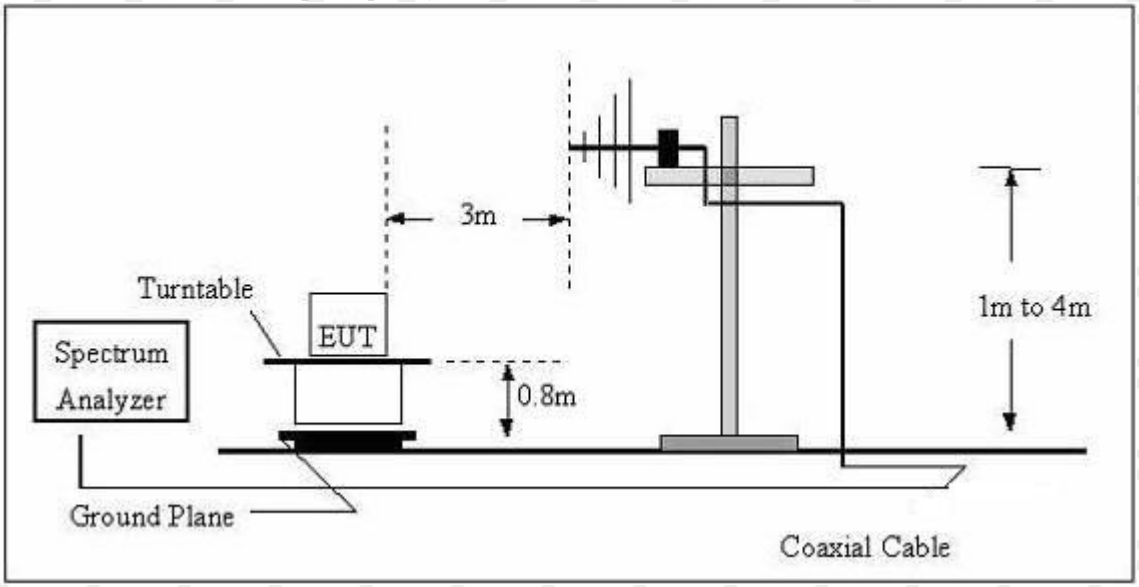

The radiated emission tests were performed in the 3 meters chamber test site, using the setup accordance with the ANSI C63.10-2013. The specification used was the FCC 15.209 and FCC 15.205 limits.

6.2. Test Standard

FCC §15.209; §15.205

6.3. EMI Test Receiver Setup

The system was investigated from 9kHz to1GHz.
During the radiated emission test, the EMI test receiver setup was set with the following configurations:

Frequency Range	RBW	Video B/W	Detector
9 kHz – 150 kHz	200 kHz	1 kHz	QP
150 kHz – 30MHz	9kHz	30kHz	QP
30 MHz – 1000 MHz	120 kHz	300 kHz	QP

Note: For the frequency bands 9-90 kHz and 110-490 kHz, the test was based on average detector.

6.4. Test Procedure

The EUT is placed on a turn table which is 0.8 meter above ground. The turn table can rotate 360 degrees to determine the position of the maximum emission level. The EUT is set 3 meters away from the receiving antenna which is mounted on a antenna tower. The antenna can move up and down between 1 to 4 meters to find out the maximum emission level. Broadband antenna (calibrated by dipole antenna) are used as a receiving antenna. Both horizontal and vertical polarization of the antenna are set on measurement.

6.5. Test Result

PASS
Please refer to the following pages.

9kHz-30MHz

Temperature:	26 ℃	Relative Humidity:	54%
Pressure:	1010 hPa	Polarization :	Horizontal
Test Voltage :	AC120V/60Hz	Test Mode :	10W

Freq. (KHz)	Detector Mode (PK/QP/AV)	Reading (dBuV)	Factor (dB)	Actual FS (dBuV/m)	Limits 3m (dBuV/m)	Margin (dBuV/m)
25.9500	PEAK	36.47	20.18	56.65	139.32	-82.67
25.9500	AV	36.37	20.15	56.52	119.32	-62.8
58.3500	PEAK	50.13	20.13	70.26	132.28	-62.02
58.3500	AV	46.25	20.32	66.57	112.28	-45.71
125.6500	PEAK	68.14	20.19	88.33	125.62	-37.29
125.6500	AV	63.38	20.25	83.63	105.62	-21.99
688.7500	QP	31.03	20.44	51.47	70.84	-19.37
968.6700	QP	35.5	20.26	55.76	67.88	-12.12

Note:
Pre-scan in the all of mode, the worst case in of was recorded.
Factor = antenna factor + cable loss – pre-amplifier.
Margin = Limit - Emission Level.

30MHz-1GHz

Temperature:	26 ℃	Relative Humidity:	54%
Pressure:	1010 hPa	Polarization :	Horizontal
Test Voltage :	AC120V/60Hz	Test Mode :	10W

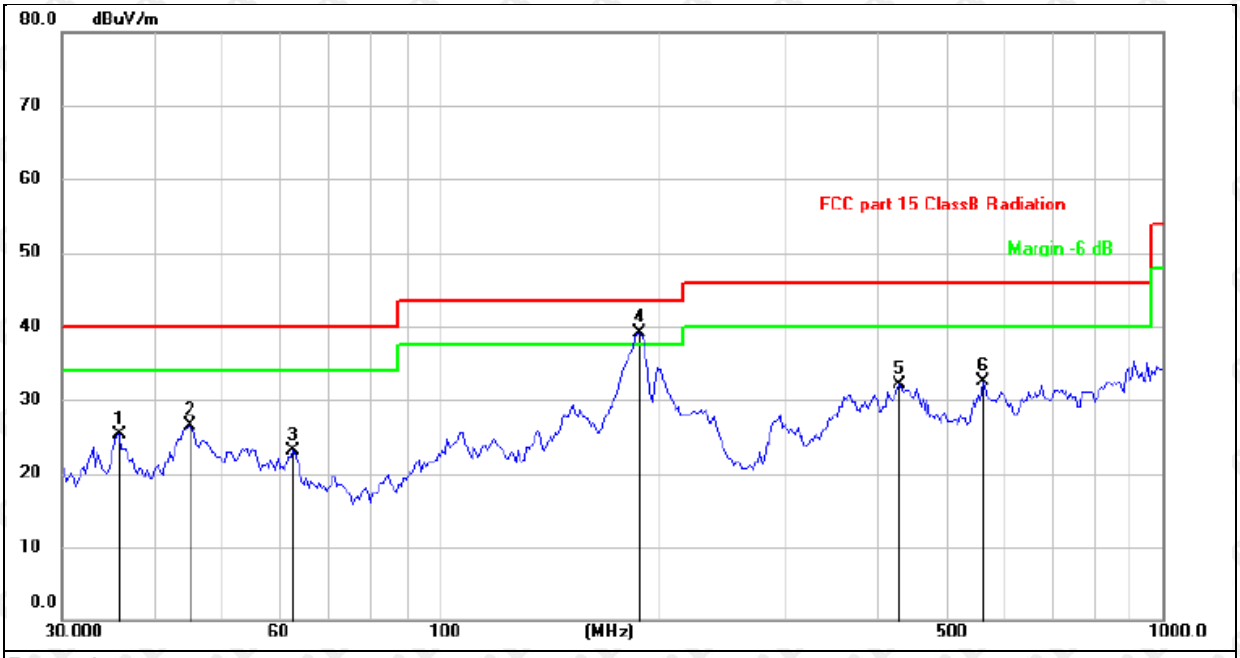

Remark:
Factor = Antenna Factor + Cable Loss – Pre-amplifier, Margin = Measurement– Limit.

No.	Mk.	Freq.	Reading Level	Correct Factor	Measure-ment	Limit	Margin	
		MHz	dBuV	dB	dBuV/m	dB/m	dB	Detector
1		36.0007	31.83	-6.51	25.32	40.00	-14.68	peak
2		45.0583	32.26	-5.78	26.48	40.00	-13.52	peak
3		62.6505	30.46	-7.28	23.18	40.00	-16.82	peak
4	*	188.4124	47.99	-8.80	39.19	43.50	-4.31	peak
5		431.0314	33.76	-1.57	32.19	46.00	-13.81	peak
6		562.6622	31.17	1.28	32.45	46.00	-13.55	peak

Temperature:	26 ℃	Relative Humidity:	54%
Pressure:	1010 hPa	Polarization :	Vertical
Test Voltage :	AC120V/60Hz	Test Mode :	10W

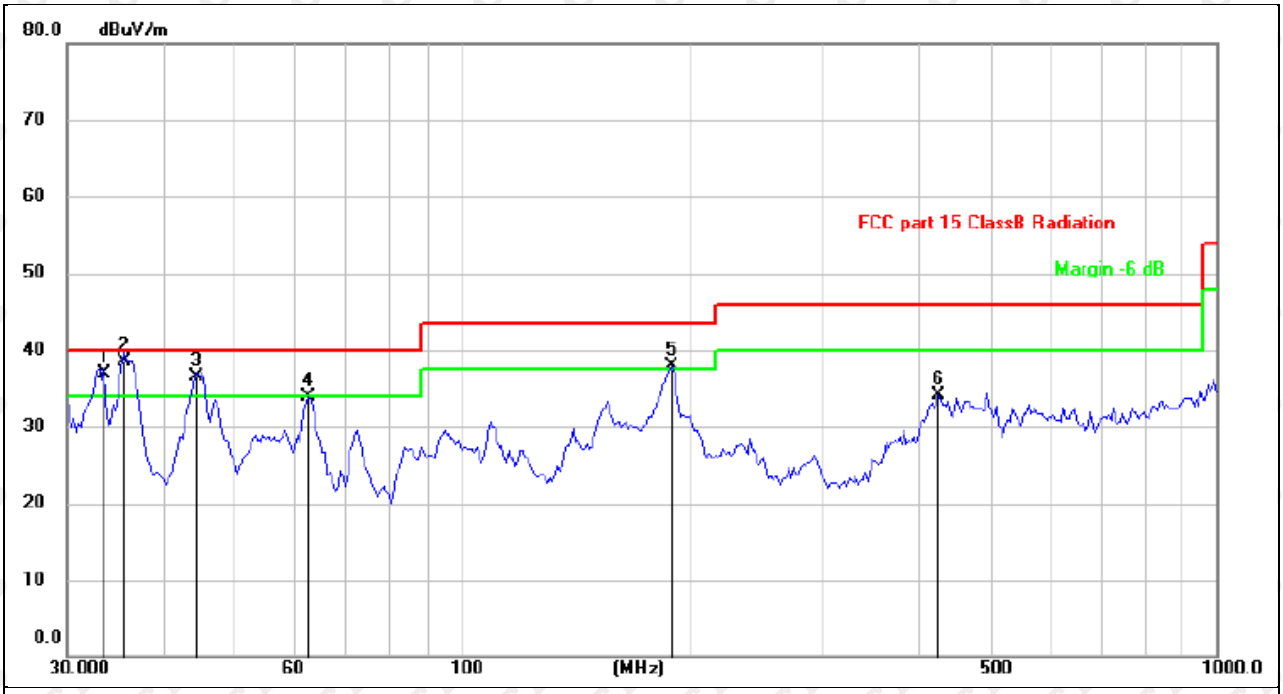

Remark:
Factor = Antenna Factor + Cable Loss – Pre-amplifier, Margin = Measurement– Limit.

No.	Mk.	Freq.	Reading Level	Correct Factor	Measure-ment	Limit	Margin		Antenna Height	Table Degree
		MHz	dBuV	dB	dBuV/m	dB/m	dB	Detector	cm	degree
1	!	33.5623	43.91	-6.96	36.95	40.00	-3.05	QP	174	132
2	*	35.7490	45.15	-6.56	38.59	40.00	-1.41	QP	104	156
3	!	44.4307	42.32	-5.78	36.54	40.00	-3.46	QP	245	178
4		62.6505	41.23	-7.28	33.95	40.00	-6.05	peak		
5	!	189.7384	46.74	-8.88	37.86	43.50	-5.64	peak		
6		428.0192	35.66	-1.61	34.05	46.00	-11.95	peak		

7. OCCUPIED BANDWIDTH

7.1. Block Diagram of Test Setup

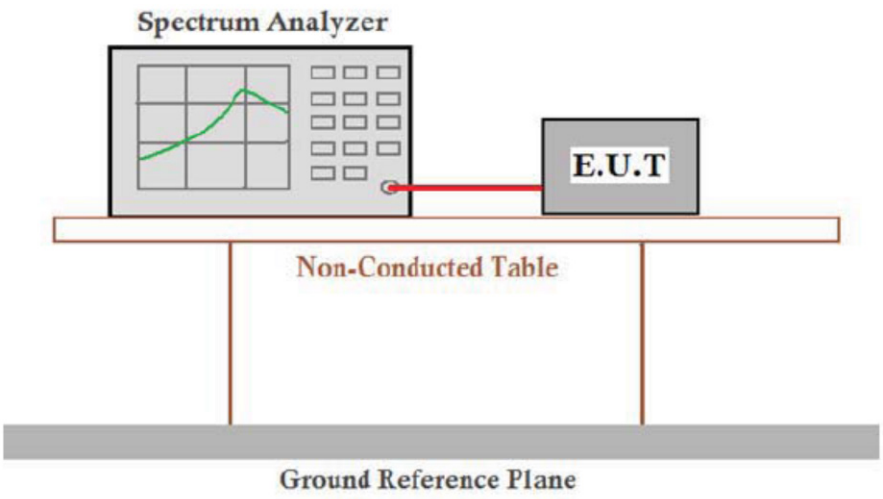

7.2. Rules and specifications

CFR 47 Part 15.215(c)
ANSI C63.10-2013

7.3. Test Procedure

Intentional radiators operating under the alternative provisions to the general emission limits, as contained in §§15.217 through 15.257 and in subpart E of this part, must be designed to ensure that 20dB bandwidth of the emission, or whatever bandwidth may otherwise be specified in the specific rule section under which the equip compliance with the 20dB attenuation specification may base on measurement at the intentional
radiator's antenna output terminal unless the intentional radiator uses a permanently attached antenna, in which case compliance shall be.deomonstrated by measuring the radiated emissions.

7.4. Test Result

PASS

Mode	Freq (KHz)	20dB Bandwidth (KHz)	Limit (kHz)	Conclusion
Tx Mode	125	2.706	/	PASS

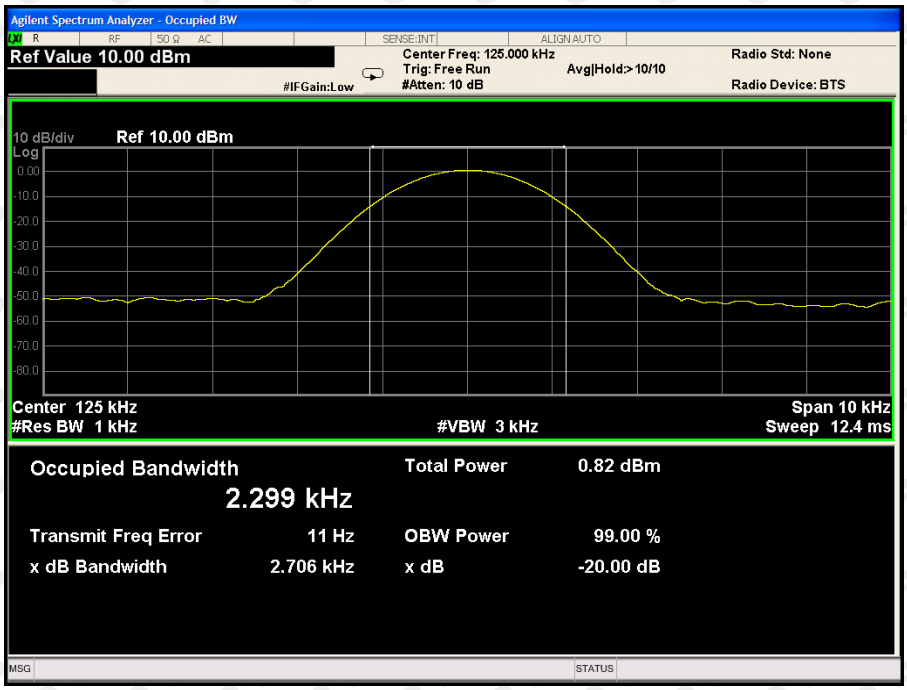

8. EUT TEST PHOTOS

Conducted Measurement Photos

Radiated Measurement Photos

30MHz-1GHz

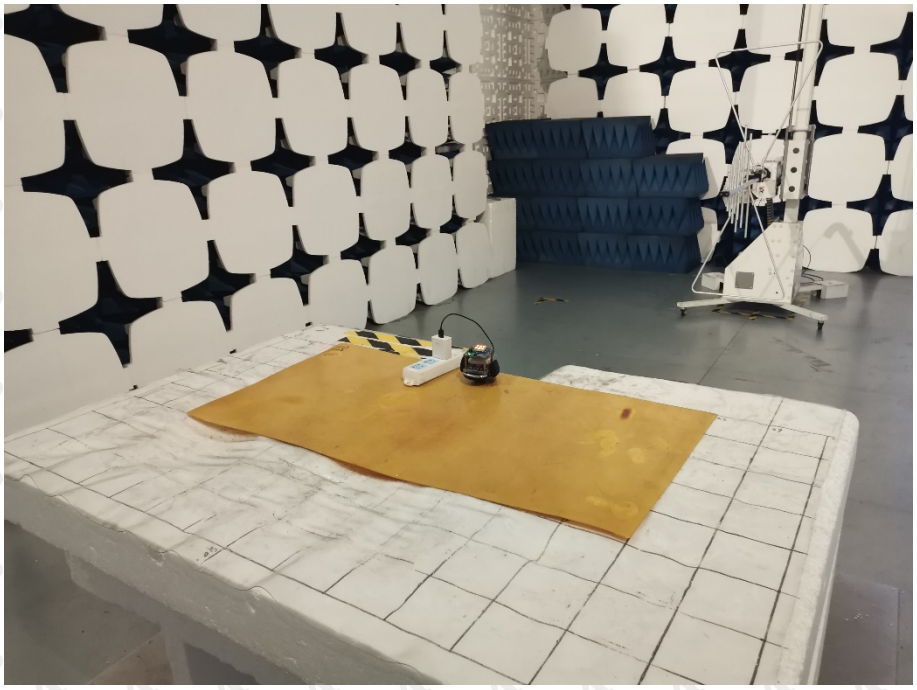

9 KHz-30MHz

9. EUT PHOTOS

EUT 1

EUT 2

※※※※※ END OF REPORT ※※※※※