28 GHz 5G Advanced Antenna System

Users Guide

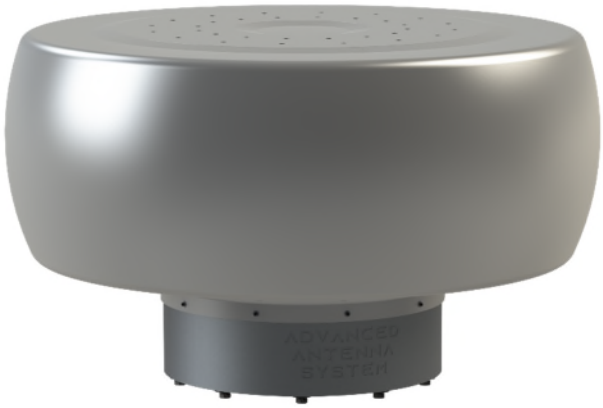

ED2 Corporation

FreeStar5G AAS

User's Guide

Version 0.2

© 2021 ED2 Corporation. All rights reserved.

Contents

1 Safety and Certification Notices 5
1.1 Federal Communication Commission Interference Statement 5
1.2 RF Exposure Statement 6
2 System Overview 7
2.1 System Architecture 7
2.2 Switch Matrix Assembly 8
2.3 Stack Assemblies 10
2.4 System Level Considerations 11
3 System Components 12
3.1 Unboxing Information 12
3.2 Pictures of Everything in the Box 13
4 Control Graphical User Interface (GUI) Panel 13
4.1.1 Network Interface Setup 14
4.1.2 Initial Configuration 15
4.1.3 Energizing Transmit Paths 16
5 Controlling the Advanced Antenna System 16
5.1 Turning On & Off Unit 17
5.2 Setup Guide 17
6 Antenna System Interfaces 18
6.1 Accessing the System Interfaces 18
6.2 Connecting the Stack to the base 19
6.3 Accessing the Antenna Ports for Direct Connection Testing 21
6.4 Antenna System Signal Level and Frequency Limitations 21
6.4.1 Advanced Antenna System Frequency limitations 21
6.4.2 Advanced Antenna System Input Signal Level Limitations 22
7 Product Specifications 22
7.1 AAS Dimensions – Radome Installed 23
7.2 AAS Dimensions Without Radome 24
7.3 AAS Weight 24
8 System Specifications 25
9 Appendix 25
Rohde & Shwarz SWM200A Test Equipment 5G Waveform Setup 25

© 2021 ED2 Corporation. All rights reserved.

© 2021 ED2 Corporation. All rights reserved.

LIST OF FIGURES

Figure 2-1 FreeStar5G AAS Functional Block Diagram 8
Figure 2-2 Switch Matrix Radio RF Distribution 9
Figure 2-3 Switch Matrix and Stack Control Block Diagram 10
Figure 2-4 Simplified Stack Assembly RF Block Diagram 11
Figure 2-5 80-Bit Word Definition 12

© 2021 ED2 Corporation. All rights reserved.

1 Safety and Certification Notices

1.1 Federal Communication Commission Interference Statement

This device complies with Part 30 of the FCC Rules. Operation is subject to the following two conditions: (1) This device may not cause harmful interference, and (2) this device must accept any interference received, including interference that may cause undesired operation.

This equipment has been tested and found to comply with the limits for an upper microwave flexible use service device, pursuant to 47 CFR Part 30 test and certification of the FCC Rules. These limits are designed to provide reasonable protection against harmful interference in a residential installation. This equipment generates, uses and can radiate radio frequency energy and, if not installed and used in accordance with the instructions, may cause harmful interference to radio communications. However, there is no guarantee that interference will not occur in a particular installation. If this equipment does cause harmful interference to radio or television reception, which can be determined by turning the equipment off and on, the user is encouraged to try to correct the interference by one of the following measures:

• Reorient or relocate the receiving antenna.

• Increase the separation between the equipment and receiver.

• Connect the equipment into a power source on a circuit different from that to which the receiver is connected.

• Consult the dealer or an experienced radio/TV technician for help.

FCC Caution:

Any changes or modifications not expressly approved by the party responsible for compliance could void the user's authority to operate this equipment.

This transmitter must not be co-located or operating in conjunction with any other antenna or transmitter.

WARNING. This is **NOT** a **CONSUMER** device. It is designed for installation by **FCC LICENSEES** and **QUALIFIED INSTALLERS**. You **MUST** have an **FCC LICENSE** or express consent of an FCC Licensee to operate this device. Unauthorized use may result in significant forfeiture penalties, including penalties in excess of $100,000 for each continuing violation.

© 2021 ED2 Corporation. All rights reserved.

1.2 RF Exposure Statement

To comply with FCC RF exposure compliance requirements, the antenna used for this transmitter must be installed to provide a separation distance of at least 40 cm from all persons and must not be co-located or operating in conjunction with any other antenna or transmitter.

© 2021 ED2 Corporation. All rights reserved.

2 System Overview

The FreeStar5G Advanced Antenna System (AAS) is a multi-beam mmW (Milli-Meter Wave) n261 band device that takes an S-Band 5G baseband signal, up-converts it, amplifies it, and transmits it through one or more dual linearly polarized antenna elements. Instead of implementing conventional electronic beamforming, where a beam is formed by combining the patterns of an array of antenna elements, FreeStar5G supports a beam-switching capability, where several transmit and/or receive beams can be simultaneously activated. The set of active beams can be controlled and adapted on-the-fly using a switch matrix. Each transmit or receive beam is created using a dielectric waveguide antenna rod. Each dual-polarized antenna rod is directly connected to the final output power amplifier for minimal loss and maximum output effective isotropic radiated power (EIRP). The antenna system also has a receive function that starts by receiving the low level incoming mmW signal through a dual linear polarized dielectric waveguide rod antenna which is directly connected to the input of a low noise amplifier for achieving minimal noise figure. The mmW signal is then filtered, amplified, then down-converted to a S-Band IF frequency for feeding back to the radio connected to the antenna system. The FreeStar5G antenna system provides a high-power base station RF Head with integrated antennas to provide state of the art antenna beam switching speeds with 360° coverage for today's mmW 5G solutions.

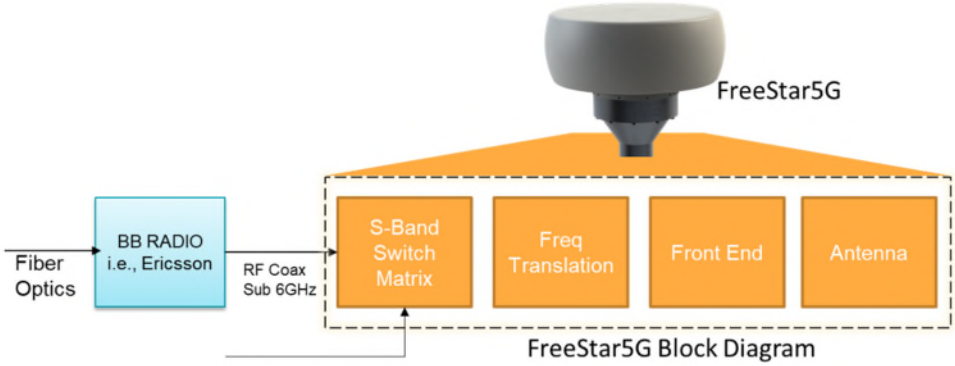

2.1 System Architecture

A simplified functional block diagram of the FreeStar5G antenna system is shown below for reference. There are 8 radio inputs to the switch matrix; radios 1 – 4 are routed to the vertical polarized antenna element and radios 5 – 8 are routed to the horizontal polarized antenna element. The switch matrix distributes the radio input frequencies to the front-end assemblies called stacks. There are 16 identical stacks with a 22.5° separation between each stack. Each stack also has two sets of antennas with a 22.5° separation in elevation. The beam pointing direction is achieved by selecting one of 16 positions in azimuth, and one of two positions in elevation. The stack takes the S-Band input radio frequency signal and upconverts, amplifies and transmits a Ka-Band signal within the 5G NR (New Radio) n261 band. A more detailed description of the switch matrix and stack assembly will follow in the upcoming sections.

© 2021 ED2 Corporation. All rights reserved.

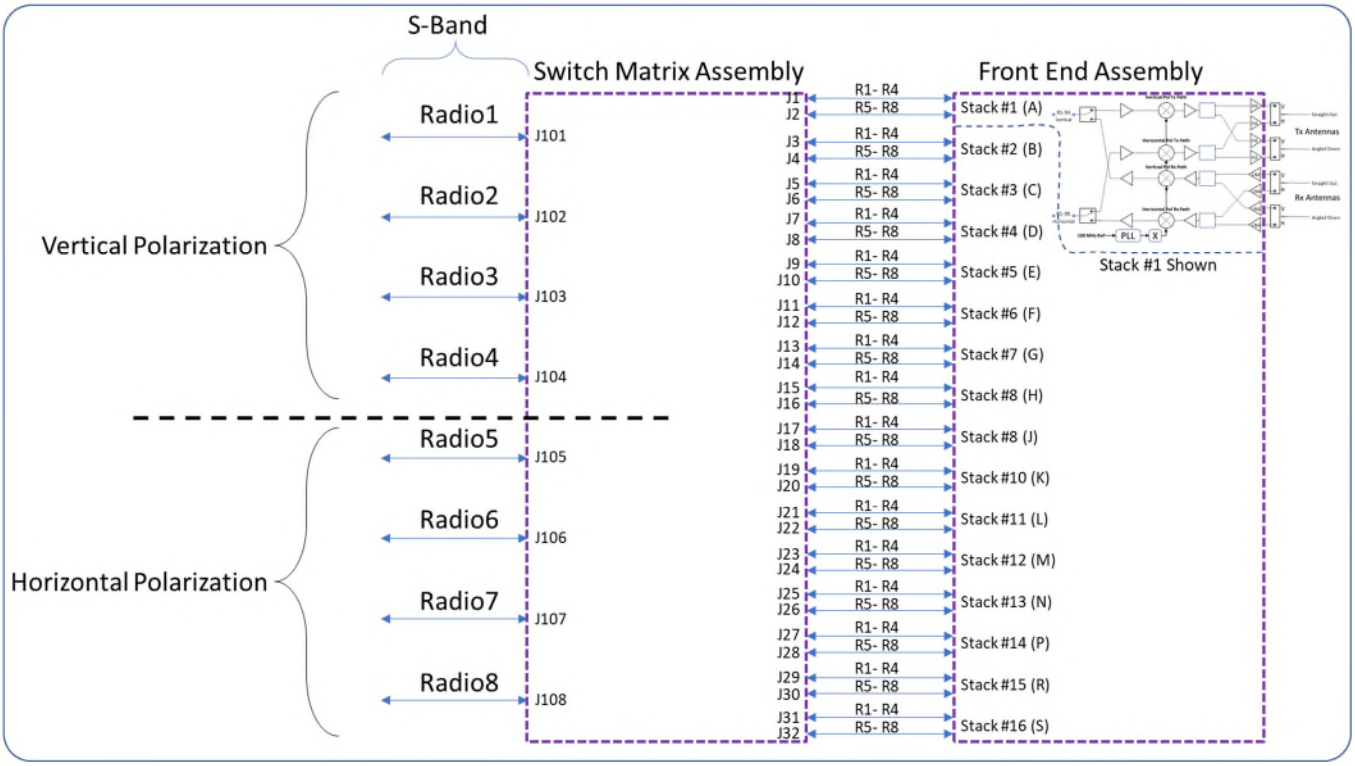

Figure 2-1 FreeStar5G AAS Functional Block Diagram

2.2 Switch Matrix Assembly

The switch matrix distributes the Radio inputs to every stack, creates a 100 MHz reference frequency for the local oscillator (LO) phase locked loops (PLLs) on each stack, receives the control words via the ethernet or USB2 interfaces, and provides control signals to each stack.

The radio distribution is a 1-to-16-way RF splitter so that each radio is distributed to every stack. Radios 1 – 4, for vertical polarization, have a 4 to one switch at each stack input for selecting the radio connection to a given stack. Radios 5 – 8, also feed to a single pole 4 throw switch to select the radio connection for the horizontal polarization. The vertical and horizontal radios are hardwire paired as follows: Radios 1 & 8, Radios 2 & 7, Radios 3 & 6 and Radios 4 & 5. The pairing is done to reduce the number of required control bits required to set up the antenna system state and are outlined in the system considerations section below. A simple block diagram of these connections is shown below for reference.

© 2021 ED2 Corporation. All rights reserved.

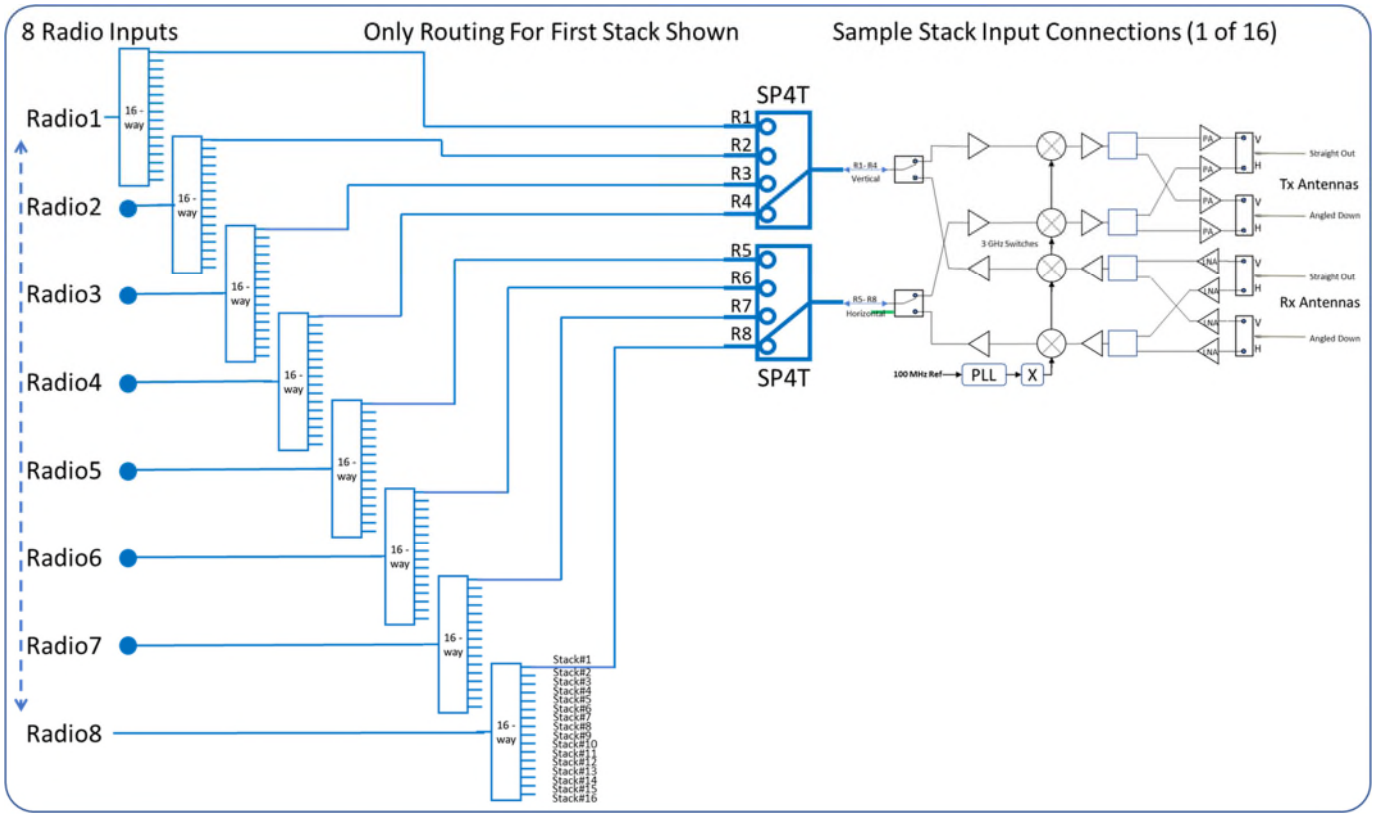

Figure 2-2 Switch Matrix Radio RF Distribution

The 100 MHz reference for all the stack assembly PLL's is also located on the switch matrix card. An accurate 10 MHz crystal oscillator feeds a PLL that locks a low noise 100 MHz oscillator to the accurate reference. The 100 MHz is distributed to 16 multi-pin connectors to feed each stack assembly. The stack assembly uses the 100 MHz reference to generate the LO necessary to up and down convert the RF signals for transmit and receive functions.

The switch matrix assembly also has two communication protocols: USB2 and ethernet for communicating with the FreeStar5G antenna system. An 80-bit word controls all the Tx/Rx and pointing functionality of the antenna system. The 80-bit word is fed directly into combinational logic for the fastest possible update rates on antenna beam direction and Tx/Rx state. A simple block diagram of the switch matrix control of the stacks is shown below for reference.

© 2021 ED2 Corporation. All rights reserved.

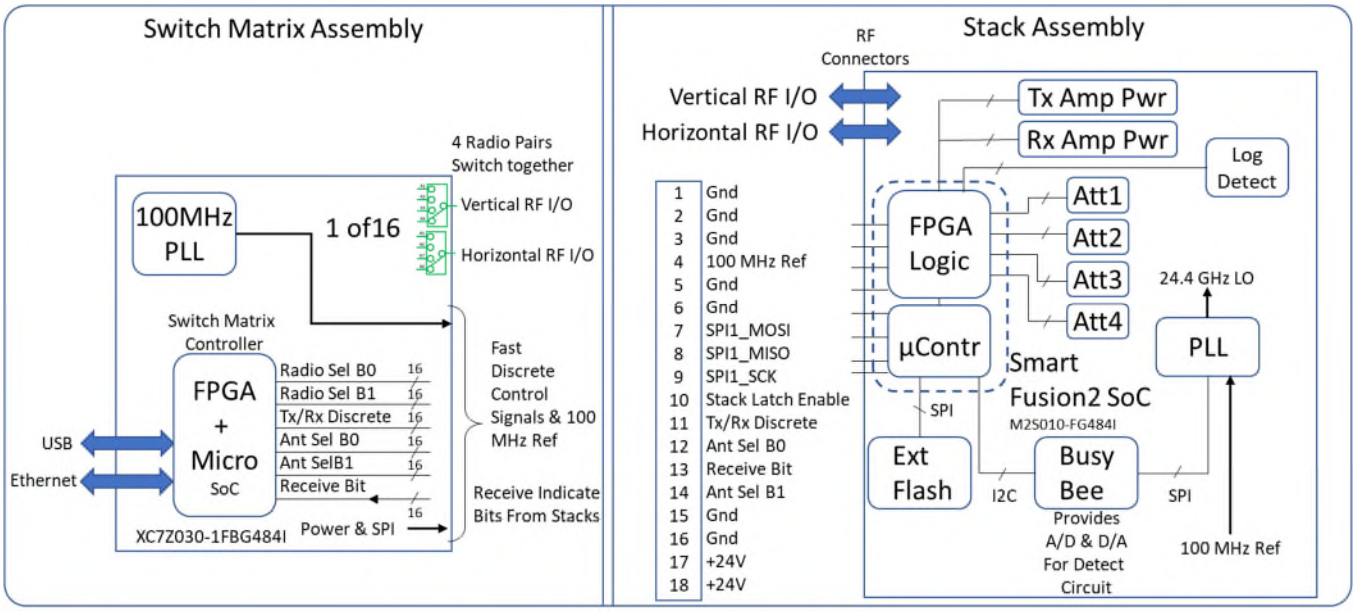

Figure 2-3 Switch Matrix and Stack Control Block Diagram

The 80-bit word is the combination of 5 discrete signals times 16 stacks. The 5 control signals are used to: select the radio (2 bits), select Rx or Tx mode (1 bit), and select the antenna pointing direction (2 bits). There are 5 separate control state bits running directly to each stack for fast switching between modes.

2.3 Stack Assemblies

The stack assembly supports two independent paths, one for vertical and one for horizontal polarized signals for MIMO (Multiple Input Multiple Output) operation. The input RF signal from the source radio is amplified and conditioned prior to being up converted to 28 GHz and amplified for transmitting out of the dual linear polarized dielectric waveguide rod antennas. Each final stage power amplifier is directly connected to the transmitting antenna cutting the need for a lossy Tx/Rx switch for maximizing the output power level. To switch signal on and off to a given antenna direction, the final amplifiers are power managed via commands generated by the 80-bit control word. A simple RF block diagram of the stack assembly is shown below for reference. The stacks also support two independent polarized receive channels with power managed low noise amplifiers (LNAs) up front to select a given antenna direction.

© 2021 ED2 Corporation. All rights reserved.

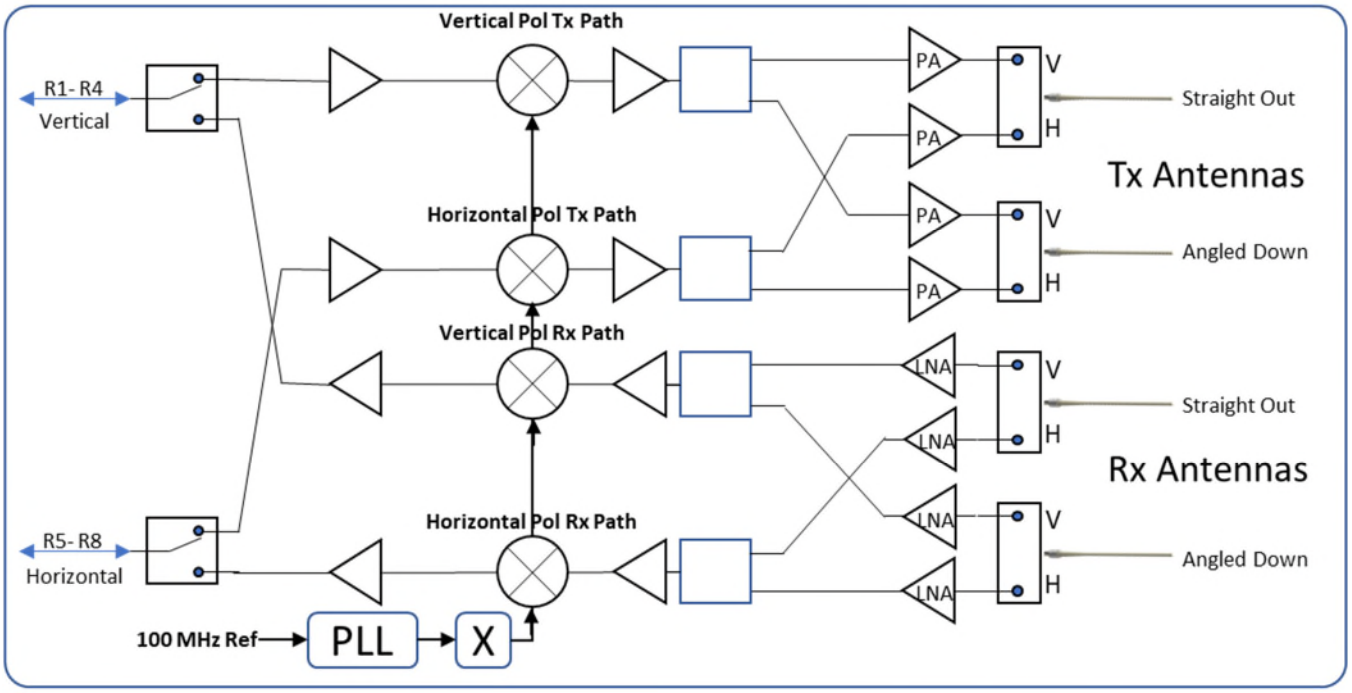

Figure 2-4 Simplified Stack Assembly RF Block Diagram

2.4 System Level Considerations

When paired with a baseband radio outputting a S-Band signal, the antenna system is a small base station with 360° azimuth coverage and over 45° coverage in elevation.

The frequency reference for all the stacks is created from the same source located on the switch matrix clock card. The common frequency reference to each stack ensures zero frequency error from stack to stack. The LO on each stack is pre-programmed to 24.4 GHz so that a 3.6 GHz radio input signal will yield an output center frequency of 28 GHz.

The antenna system is powered from a single standard AC 120V power plug. All connections are made on the bottom of the assembly which is designed for pole mounted applications. For lab testing, the unit requires to be lifted off the testing surface for access to the power and communication ports.

The communication to the unit for lab testing is achieved through an ethernet cable connected to a Windows 10 computer running a Graphical User Interface (GUI) and is described in greater detail in the Advanced Antenna System setup guide. The contents of the 80-bit word are shown below for reference only, the GUI has a simple easy to understand interface that gives the user control over which radio input is selected as well as which antenna ports are transmitting or receiving signals.

© 2021 ED2 Corporation. All rights reserved.

80 Bit Control Word Definition

Bit definition tables are shown for stack 1

Stack Ref	Bit#	Signal Name	Stack Ref	Bit#	Signal Name	Stack Ref	Bit#	Signal Name	Stack Ref	Bit#	Signal Name
1	79	TX/RX_DISC1_1	5	59	TX/RX_DISC1_5	9	39	TX/RX_DISC1_9	13	19	TX/RX_DISC1_13
1	78	ANT_DIR_DISC1_1	5	58	ANT_DIR_DISC1_5	9	38	ANT_DIR_DISC1_9	13	18	ANT_DIR_DISC1_13
1	77	ANT_DIR_DISC2_1	5	57	ANT_DIR_DISC2_5	9	37	ANT_DIR_DISC2_9	13	17	ANT_DIR_DISC2_13
1	76	RX/TX_VH_1A-4A_V1	5	56	RX/TX_VH_1E-4E_V1	9	36	RX/TX_VH_1J-4J_V1	13	16	RX/TX_VH_1N-4N_V1
1	75	RX/TX_VH_1A-4A_V2	5	55	RX/TX_VH_1E-4E_V2	9	35	RX/TX_VH_1J-4J_V2	13	15	RX/TX_VH_1N-4N_V2
2	74	TX/RX_DISC1_2	6	54	TX/RX_DISC1_6	10	34	TX/RX_DISC1_10	14	14	TX/RX_DISC1_14
2	73	ANT_DIR_DISC1_2	6	53	ANT_DIR_DISC1_6	10	33	ANT_DIR_DISC1_10	14	13	ANT_DIR_DISC1_14
2	72	ANT_DIR_DISC2_2	6	52	ANT_DIR_DISC2_6	10	32	ANT_DIR_DISC2_10	14	12	ANT_DIR_DISC2_14
2	71	RX/TX_VH_1B-4B_V1	6	51	RX/TX_VH_1F-4F_V1	10	31	RX/TX_VH_1K-4K_V1	14	11	RX/TX_VH_1P-4P_V1
2	70	RX/TX_VH_1B-4B_V2	6	50	RX/TX_VH_1F-4F_V2	10	30	RX/TX_VH_1K-4K_V2	14	10	RX/TX_VH_1P-4P_V2
3	69	TX/RX_DISC1_3	7	49	TX/RX_DISC1_7	11	29	TX/RX_DISC1_11	15	9	TX/RX_DISC1_15
3	68	ANT_DIR_DISC1_3	7	48	ANT_DIR_DISC1_7	11	28	ANT_DIR_DISC1_11	15	8	ANT_DIR_DISC1_15
3	67	ANT_DIR_DISC2_3	7	47	ANT_DIR_DISC2_7	11	27	ANT_DIR_DISC2_11	15	7	ANT_DIR_DISC2_15
3	66	RX/TX_VH_1C-4C_V1	7	46	RX/TX_VH_1G-4G_V1	11	26	RX/TX_VH_1L-4L_V1	15	6	RX/TX_VH_1R-4R_V1
3	65	RX/TX_VH_1C-4C_V2	7	45	RX/TX_VH_1G-4G_V2	11	25	RX/TX_VH_1L-4L_V2	15	5	RX/TX_VH_1R-4R_V2
4	64	TX/RX_DISC1_4	8	44	TX/RX_DISC1_8	12	24	TX/RX_DISC1_12	16	4	TX/RX_DISC1_16
4	63	ANT_DIR_DISC1_4	8	43	ANT_DIR_DISC1_8	12	23	ANT_DIR_DISC1_12	16	3	ANT_DIR_DISC1_16
4	62	ANT_DIR_DISC2_4	8	42	ANT_DIR_DISC2_8	12	22	ANT_DIR_DISC2_12	16	2	ANT_DIR_DISC2_16
4	61	RX/TX_VH_1D-4D_V1	8	41	RX/TX_VH_1H-4H_V1	12	21	RX/TX_VH_1M-4M_V1	16	1	RX/TX_VH_1S-4S_V1
4	60	RX/TX_VH_1D-4D_V2	8	40	RX/TX_VH_1H-4H_V2	12	20	RX/TX_VH_1M-4M_V2	16	0	RX/TX_VH_1S-4S_V2

Tx/Rx Bit Definition

Mode	TX/RX_DISC1_1
Tx	0
Rx	1

Antenna Direction Bit Definition

Mode	ANT_DIR_DISC2_1	ANT_DIR_DISC1_1
All Off	0	0
Straight Out	0	1
Down	1	0
Both Straight & Down	1	1

Radio Selection Bit Definition

Mode	RX/TX_VH_1A-4A_V2	RX/TX_VH_1A-4A_V1
Radio 1 & 8	0	1
Radio 2 & 7	1	0
Radio 3 & 6	1	1
Radio 4 & 5	0	0

Figure 2-5 80-Bit Word Definition

This chapter includes a list of items included with the antenna system and a description of the user interface and ports on the device.

3 System Components

3.1 Unboxing Information

Inside the product package for the FF5G antenna system, you should find the following items:

- Advanced Antenna System Base
- Stack Assembly
- 1 Ethernet cable
- 3-Pin round connector with power plug and USB

© 2021 ED2 Corporation. All rights reserved.

3.2 Pictures of Everything in the Box

Advanced Antenna System Base

120V to 3 Pin Cable

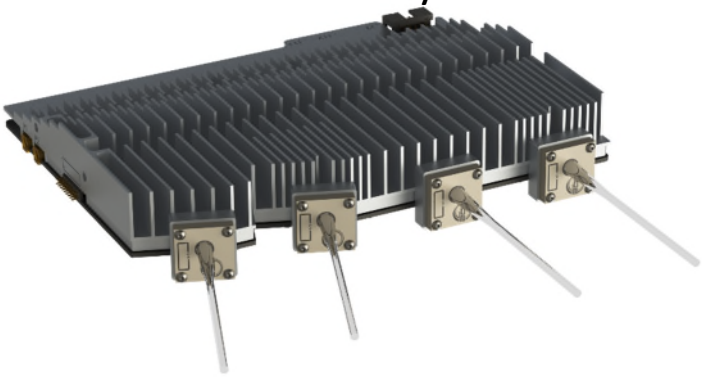

Stack Assembly With Antennas

Ethernet Cable

4 Control Graphical User Interface (GUI) Panel

There is a Graphical User Interface (GUI) that is provided for accessing the functionality of the antenna system. The sections below outline the use and installation of the GUI. It is assumed the User will be using a Windows 10 Operating System with 1 available ethernet port.

Required files for GUI operation:

- DAS_FCC_GUI.exe
- FCC_Sequence.csv

Connecting to the Antenna System:

Please note the “Ping Result” green text in the GUI screenshot below. This status label does not signify connection, but rather the availability of the device. This label indicates that the antenna system is ready to connect to the GUI. After system power on, ensure the correct IP and port are typed and wait for the Ping Result to show Success. Then click the connect button. Unplugging the unit or disconnecting the

© 2021 ED2 Corporation. All rights reserved.

ethernet during operation will pop-up a message box signifying disconnection and remove access to sending commands until the system is re-connected.

The user must import the CSV file used for sending commands via the import button. This will pop-up a file search dialogue where the user can then find the CSV file and open it into the GUI. Please use the provided CSV file for importing. The user may also enter single commands via the “Raw Command Entry” textbox.

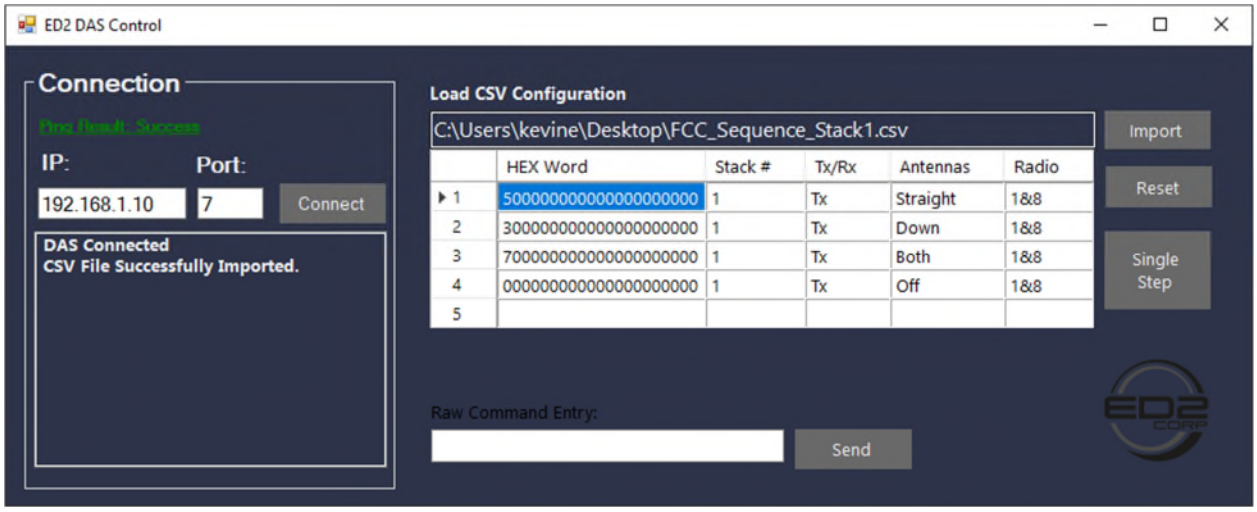

4.1.1 Network Interface Setup

The following steps are needed to configure the ethernet port on the PC in order to correctly communicate to the antenna system test setup.

Press Win + R keyboard combination, the “Run” window should appear. Type “ncpa.cpl” in the text box of the run window and click “OK”.

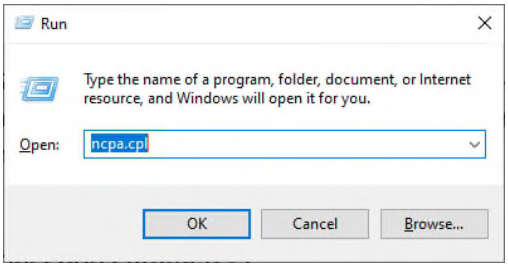

The following window should open. Double click on the ethernet connection box (highlighted) to open the ethernet properties.

© 2021 ED2 Corporation. All rights reserved.

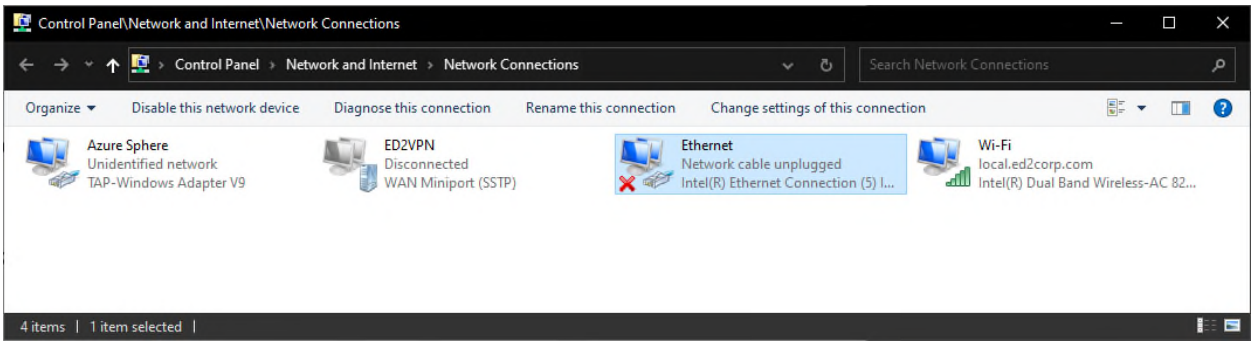

With the ethernet properties open, double click on “Internet Protocol Version 4 (TCP/IPv4)” text (highlighted), then fill in the page as shown below. When finished, click “OK” in the IPV4 Properties window, then “OK” in the ethernet properties window.

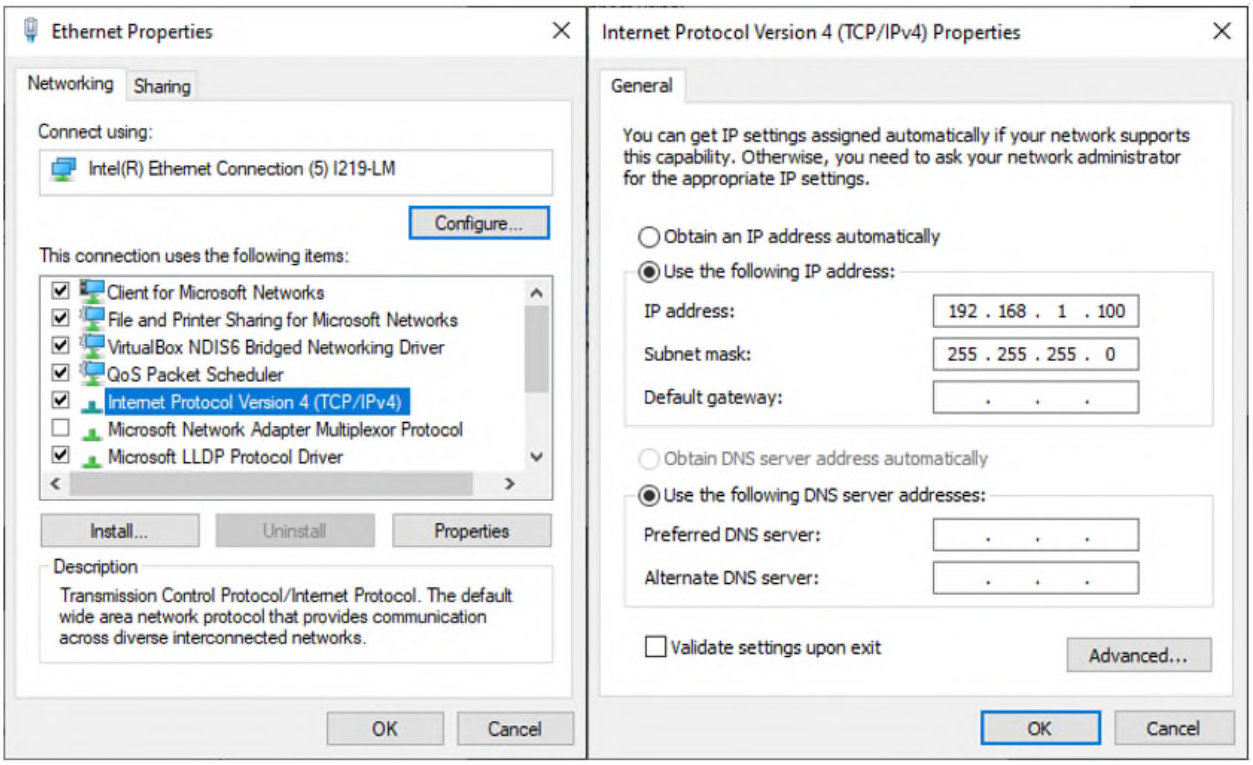

After completing the above steps, the PC is ready for proper ethernet connection to the antenna system.

4.1.2 Initial Configuration

Upon power on of the unit, the system will configure into a standby-like state. This entails all PLL / Clocks being configured and all Power Amplifiers Disabled. The ethernet peripheral will wait for an IP address from a DHCP controller. If no IP address is given, the default IP address and port are assigned.

© 2021 ED2 Corporation. All rights reserved.

When connecting the antenna system to a Laptop / PC Directly, the default connection parameters are used.

Default Network Client Connection Parameters:

- IP: 192.168.1.10
- Port: 7

4.1.3 Energizing Transmit Paths

The antenna system accepts single 20-Byte words as command entries. After the antenna system is connected to the GUI and CSV file (provided) is successfully imported, the GUI will allow sending commands via the single step button or Raw entry via the "Raw Command Entry" textbox.

For Single Stepping, each row in the CSV configuration shows the command, and the parameters that the command will assert. For example, the highlighted command will activate stack 1 into Transmit mode in the "Pointing Down" configuration (lower antennas). Additionally, the blue highlighted row is the word that is sent after clicking the "Single Step" button. The user may look to the text box on the left pane of the GUI to see an ACK (Acknowledgment) of the command, followed by the command that was accepted.

The blue highlighted row is the word that is sent after clicking the "Single Step" button. The user may look to the text box on the left pane of the GUI to see an ACK (Acknowledgment) of the command, followed by the command that was accepted.

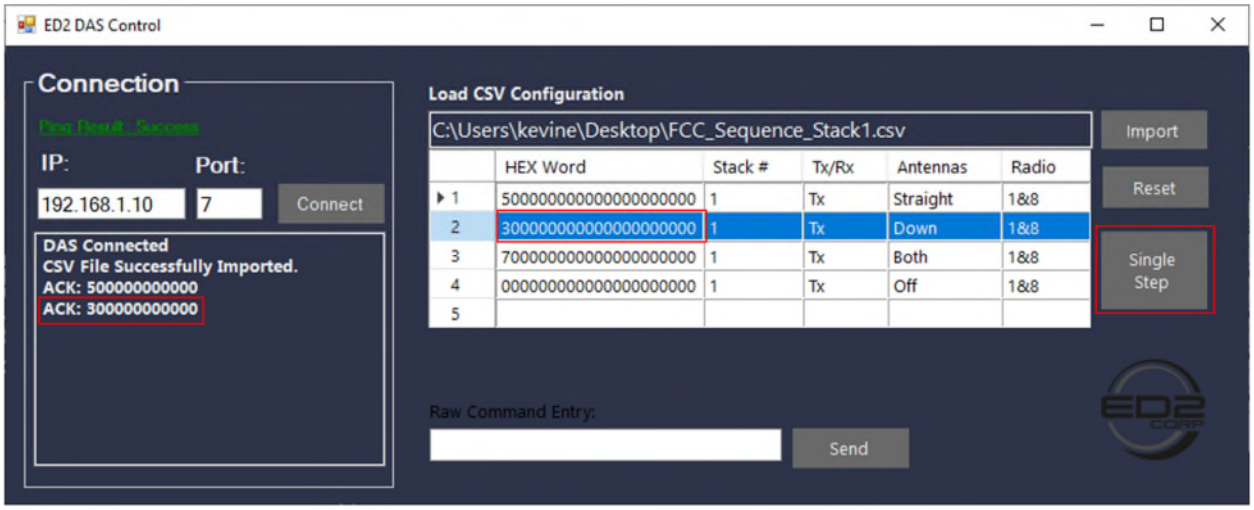

5 Controlling the Advanced Antenna System

Once the antenna system is connected via ethernet to a PC and AC plugged into a wall outlet receptable, the unit can be configured for testing and controlling a single stack. Though, before full control a GUI (section 4.3) must be installed onto PC of choice.

© 2021 ED2 Corporation. All rights reserved.

5.1 Turning On & Off Unit

The unit is turned on and off by plugging or unplugging the provided standard wall plug with ground prong.

5.2 Setup Guide

The setup connection diagram is shown below for reference. The antenna system is comprised of a Switch Matrix CCA and 16 Stack assemblies. For FCC (Federal Communications Commission) test, only a single stack will be needed and tested. The antenna system is controlled via the GUI panel on the laptop being used. The unit simply needs to be plugged into any standard 15-amp wall outlet with the plug attached to the antenna system 3-pin connector. The unit comes pre calibrated and set up for stable operation and will be fully operational within a few minutes of powering up.

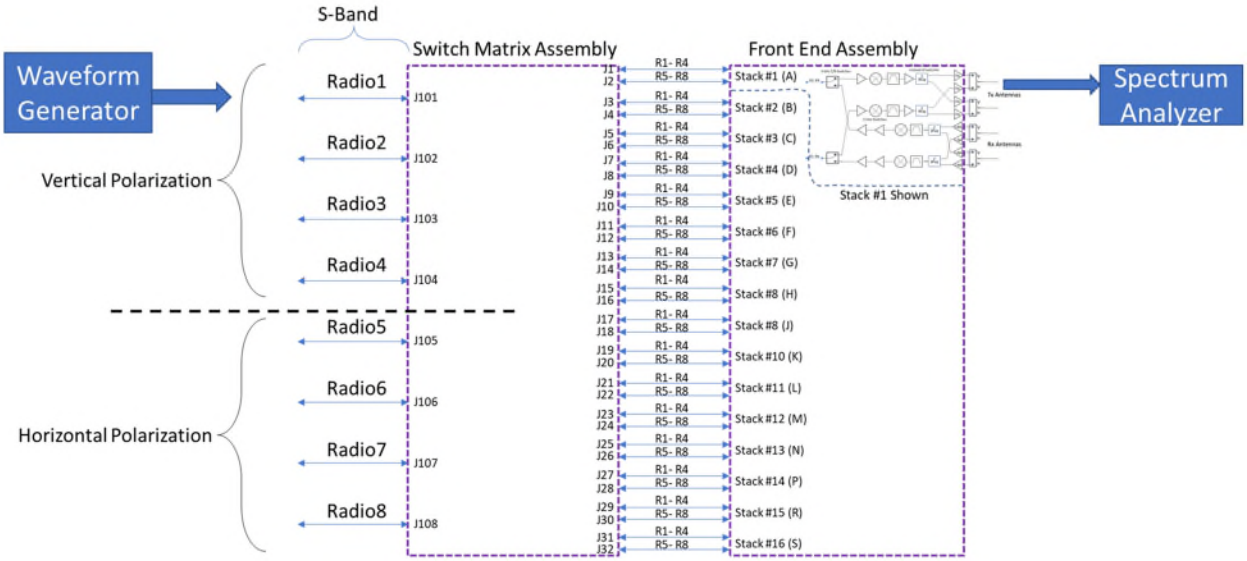

Prior to power-up, the RF input waveform should be created. To create the waveform, follow the procedure found in Section 8 of this document Appendix.

Next, insert an SMA RF cable between Radio 1 input labeled 'ONE' on the underside of the DUT and the other end connected to the SMW200A, RF output of Rohde & Shwarz generator.

To monitor the output, identify position stack "1" and direct connect cable on Transmit (Tx) Vertical using SMPM to 2.9mm adapter if performing direct connect testing of the unit. Connect other end of cable to spectrum analyzer or equivalent test equipment for FCC characterization. If doing over the air (OTA) testing, the antennas should be installed. See section 6.3 Accessing the Antenna Ports for Direct Connection Testing for details on how to remove the antenna.

Reference table below for enabled transmit polarization output and respective radio input channel.

© 2021 ED2 Corporation. All rights reserved.

Radio Input	Word	Straight Tx-vertical	Straight Tx-horizontal	Down Tx-vertical	Down Tx-horizontal
Ch1	TBD	N/A	J2	N/A	J6
Ch8	TBD	J1	N/A	J5	N/A

6 Antenna System Interfaces

The antenna system underside has connections as shown below. There are 8 radio inputs labeled 'one' through 'eight'. For basic testing, only Radio one will be utilized.

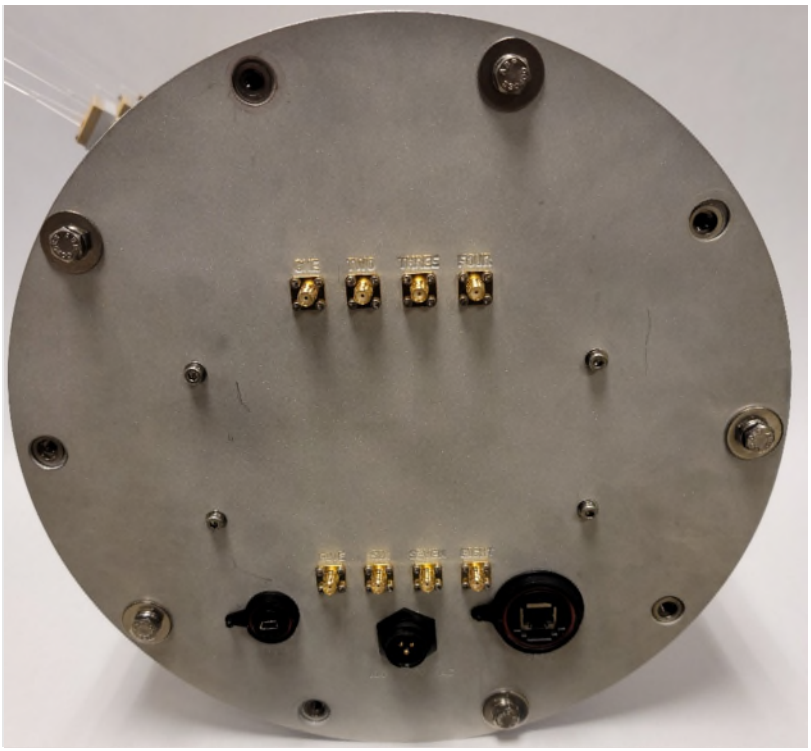

Unit Underside Connections

6.1 Accessing the System Interfaces

The antenna system power connector and communication interfaces are on the bottom of the unit so connecting to the unit requires a stand that lifts the unit off the testing surface.

© 2021 ED2 Corporation. All rights reserved.

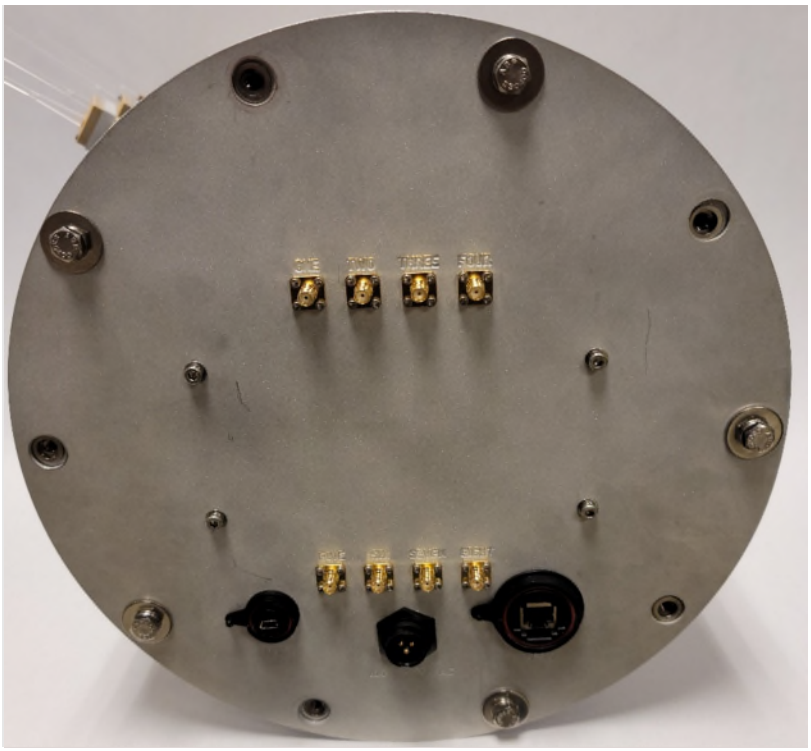

Bottom View of Antenna System Base

6.2 Connecting the Stack to the base

The stack circuit card assembly is mounted to the switch matrix circuit card assembly via an 18-pin connector and 2 push-on MMBX RF (Radio Frequency) connectors. Once the stack is snapped onto the base connectors it will need to be secured to the base with two #4 socket head screws (provided). The RF connectors require a connecting bullet that mates the base connectors to the stack housing connectors – these connecting adapters are included with the hardware.

To install the stack CCA into the switch matrix CCA, begin by inserting the two RF bullets into the stack CCA. The RF bullets have a full detent side and a limited detent side. See photos below for how to differentiate between the two sides of the RF bullet – notice the difference in the shape of the dielectric (white) material. The full detent side should be inserted into the stack CCA first. The full detent side will require a firm push to fully seat into the connector on the stack CCA. Visually align the 18-pin connector (male pins) on the stack CCA with the 18-pin connector (female socket) on the switch matrix CCA. Begin mating the two multi pin connectors by starting from the outer most pins and slowly rocking the stack CCA downward such that the RF connectors are the last thing to mate. Verify the alignment of the stack CCA by inspecting the two mounting holes. If the stack CCA is aligned properly, the through mounting holes on the stack CCA will be concentric with the tapped mounting holes on the switch matrix CCA. Install the provided 4-40 mounting screws.

© 2021 ED2 Corporation. All rights reserved.

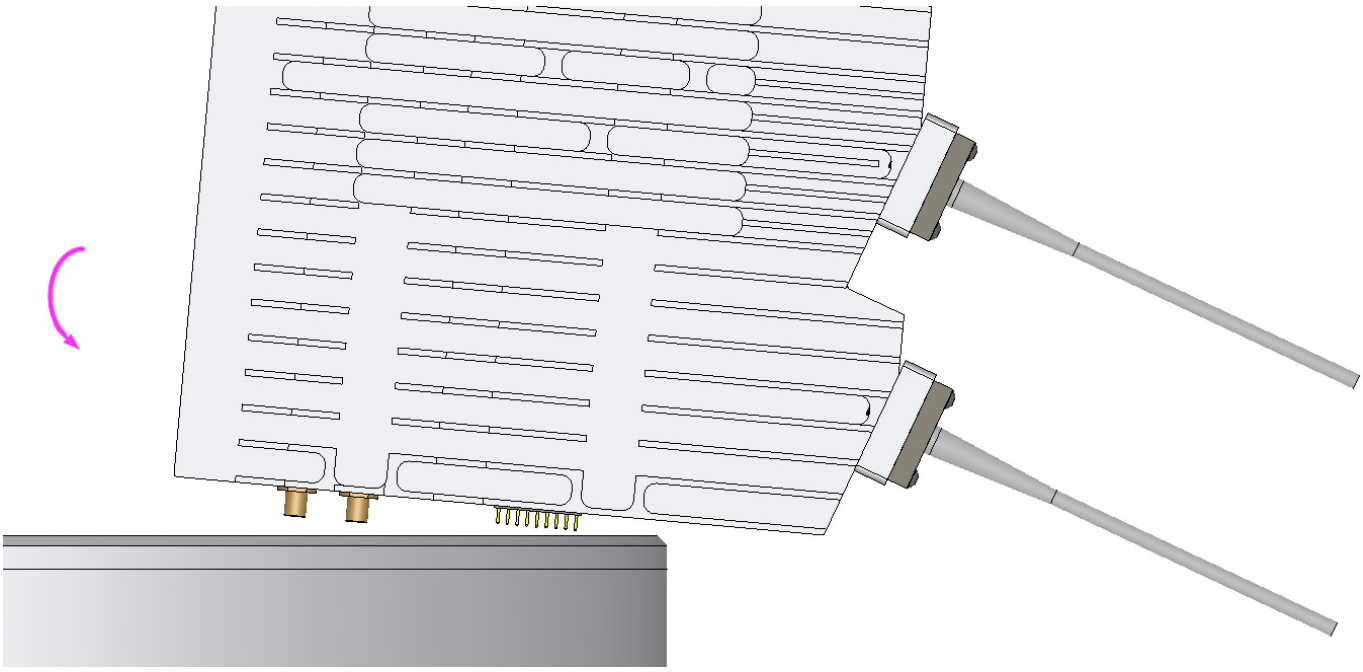

Stack CCA install direction

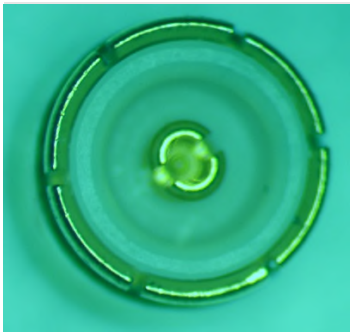

Full detent side of bullet

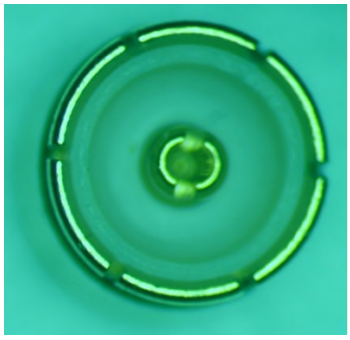

Limited detent side of bullet

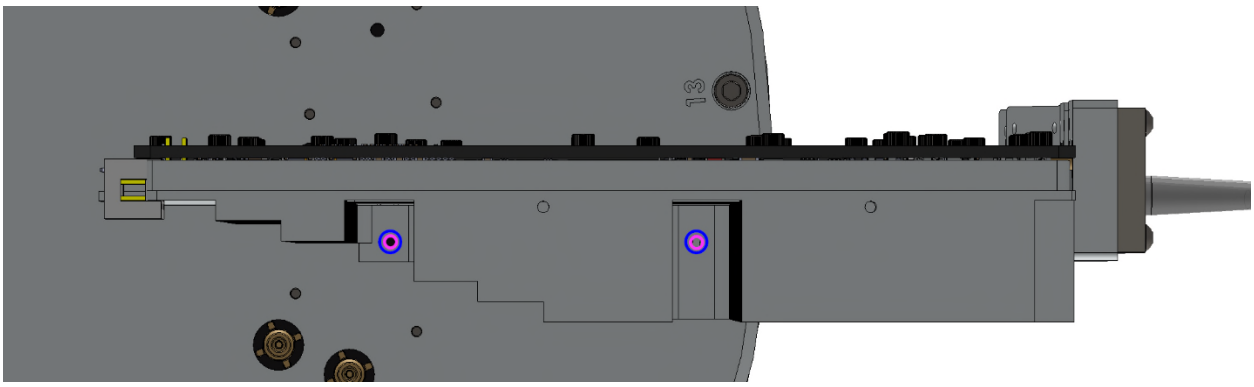

Concentric mounting holes – stack is aligned properly

© 2021 ED2 Corporation. All rights reserved.

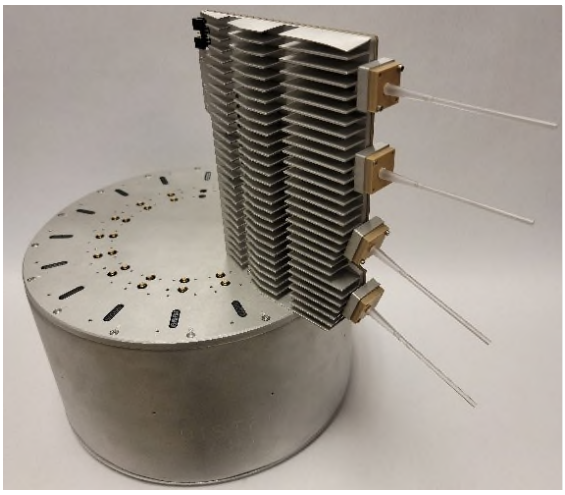

Stack CCA mounted on switch matrix CCA

6.3 Accessing the Antenna Ports for Direct Connection Testing

The antenna ports can be accessed for direct connection FCC testing. This section will outline the steps to take in order to access these ports. The unused antenna ports do not require an antenna or termination while testing. The port under test will be the only port energized for testing.

Step 1: Remove the 4 screws holding the antenna assembly to the main body of the stack housing

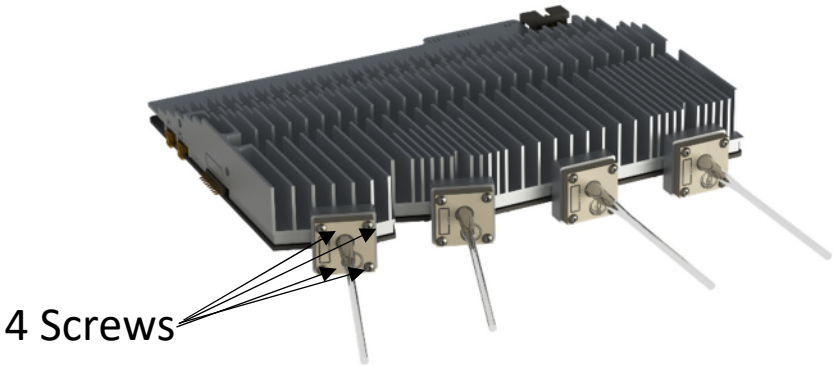

Step 2: Remove antenna assembly from the stack housing antenna plate. The antenna plate will remain on the stack housing and RF connections can be made with an SMPM to 2.9 mm adapter.

6.4 Antenna System Signal Level and Frequency Limitations

The antenna system is designed to upconvert an IF signal frequency to the 5G n261 band. This section will outline any signal level and frequency limitations for the IF signal.

6.4.1 Advanced Antenna System Frequency limitations

The antenna system comes pre-programmed with a 24.4 GHz local oscillator frequency. An IF input frequency of 3.6 GHz will yield an output frequency of 28.0 GHz. The frequency reference for the local

© 2021 ED2 Corporation. All rights reserved.

oscillator has a relative frequency error of ±200 ppb with an absolute accuracy of <±2 ppm although all numbers shown here are exact for illustration purposes. The formula for calculating the overall frequency stability error is shown below for reference.

$$Overall\ Error_{ppm} = \frac{IF\ Freq_{(MHz)} \times ppm\ Error + LO\ Freq_{(MHz)} \times ppm\ Error}{RF\ Freq_{(MHz)}}$$

If the antenna system local oscillator phase locked loop (PLL) becomes unlocked at any point, the system will inhibit the transmit function and create a system error flag. The table below illustrates the upper and lower frequency limitations for the n261 band.

Limit Description	IF Input (MHz)	Resulting RF Output (MHz)
Lower Frequency Limit	**3,100**	**27,500**
Upper Frequency Limit	**3,950**	**28,350**

Table 6-1. n261 Band Frequency Example

6.4.1.1 Baseband Unit Frequency Stability Effect on Overall Error

A simple example of a baseband unit frequency error and how that error translates to the output RF signal error is given here using the equation illustrated in section 6.4.1. Assuming a high-end frequency IF baseband input of 3,950 MHz with a +2 ppm frequency error, and a +1 ppm frequency error of the internal local oscillator at 24,400 MHz, the following overall RF frequency error will be:

$$Overall\ Error_{ppm} = \frac{3{,}950_{(MHz)} \times 2\ ppm\ Error + 24{,}400_{(MHz)} \times 1\ ppm\ Error}{28{,}350_{(MHz)}} = 1.139\ ppm$$

Given the conditions above, the RF frequency error of 1.139 ppm is slightly higher than the error of the internal local oscillator. This is because the absolute error of the lower frequency IF baseband signal ends up being a fraction of the parts per million at Ka-Band frequencies.

6.4.2 Advanced Antenna System Input Signal Level Limitations

In order to keep the signal intermodulation products from creating out of band signals, the maximum IF signal level is -5.5 dBm total channel power for a 100 MHz channel bandwidth when no RF attenuation is applied. For channel bandwidths less than 100 megahertz the EIRP must be reduced proportionally and linearly based on the bandwidth relative to 100 megahertz.

7 Product Specifications

The product specifications section contains the physical characteristics of the FreeStar5G AAS.

© 2021 ED2 Corporation. All rights reserved.

7.1 AAS Dimensions – Radome Installed

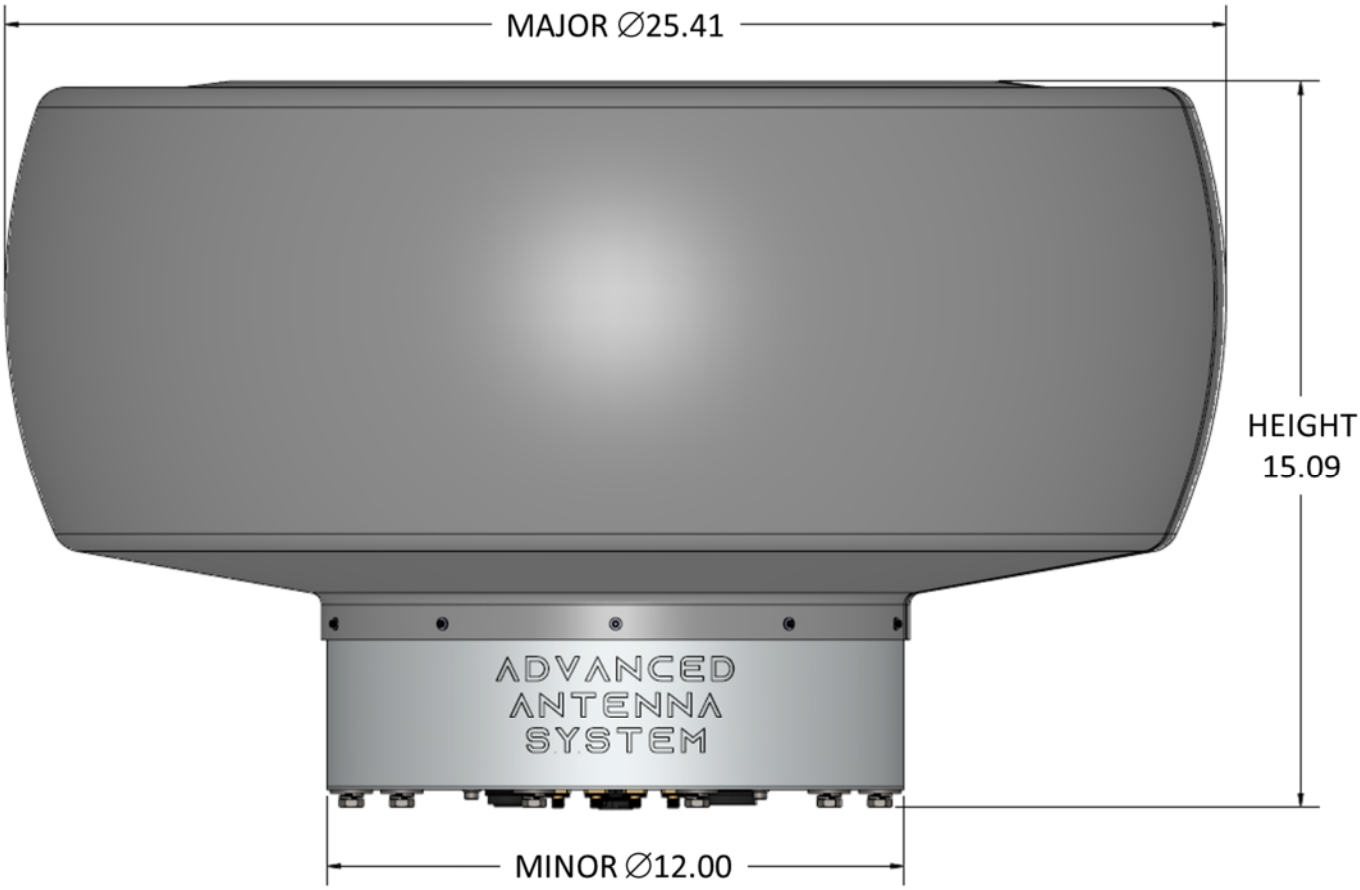

Dimensions in Inches

© 2021 ED2 Corporation. All rights reserved.

7.2 AAS Dimensions Without Radome

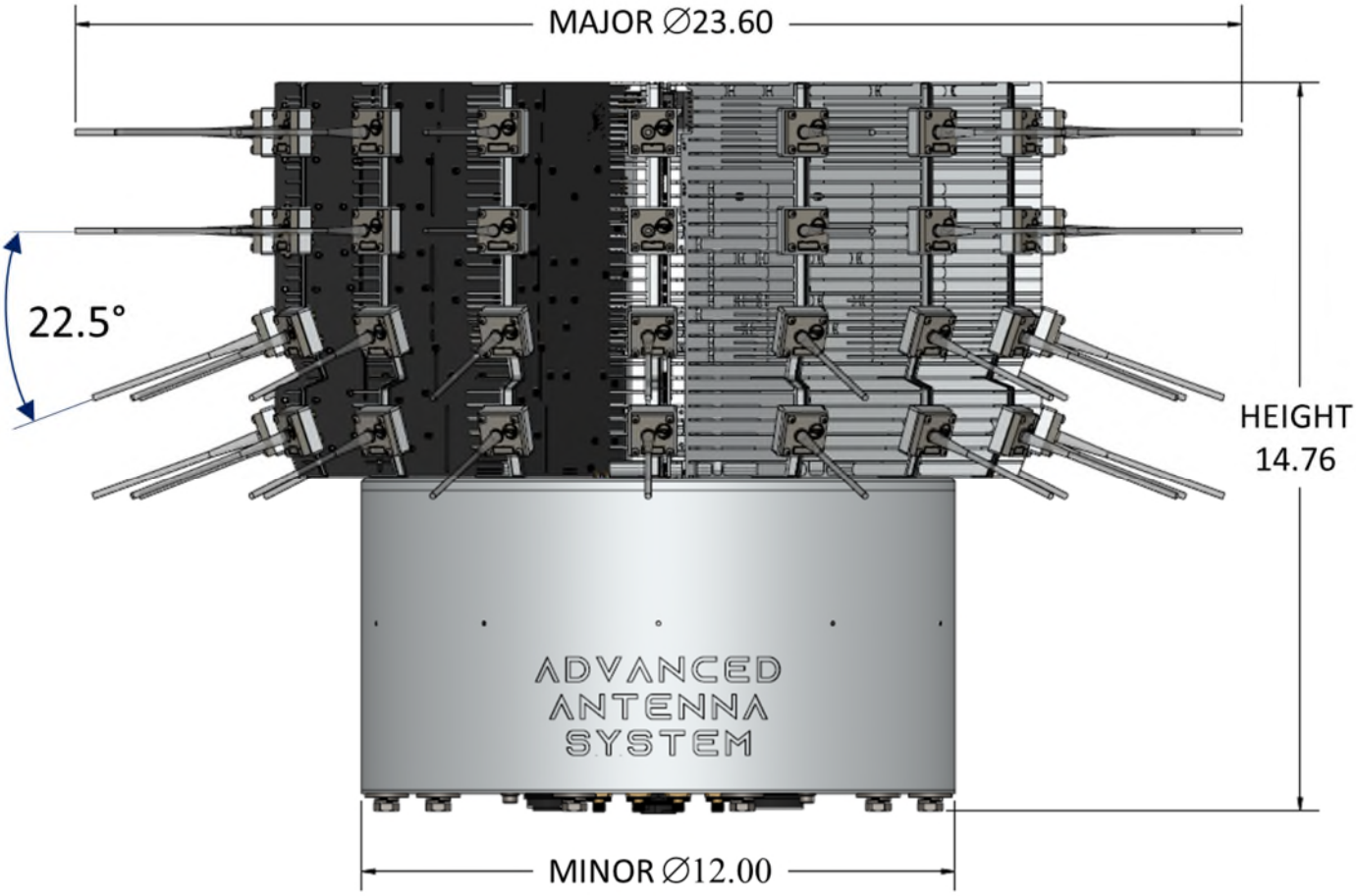

Dimensions in Inches

7.3 AAS Weight

The weight of a fully populated FreeStar5G AAS with radome installed is 40 pounds.

© 2021 ED2 Corporation. All rights reserved.

8 System Specifications

Parameter	Specification
Frequency range	27.5 – 28.35 GHz
Max. EIRP	50 dBm
Eff. Isotropic Sensitivity Factor (EISF) – DU/SU	-15 (NF – Ant Gain)
HPBW – Azimuth & Elevation for antenna	22.5°/22.5°
28GHz Dual Polarized Antenna gain	18 dBi
Max NF (UL/DL)	3 dB
Range of tunable gain – DL/UL	30 dB Minimum
Max. electronic gain – DL/UL	48 dB
In-band ripple (per 100 MHz band)	2 dB p/p
Supported MCS	All 5G NR schemes (Waveform agnostic)
Power consumption	90 Watts Typical as Configured
Polarization Type	Dual-polarized
Cross-polarization ratio	20 dB minimum
Operating Temperature	-40° to 55°
Weight	<45 lb. including radome
Configuration / management interface	Ethernet & USB
Mounting	N/A
Power method	AC wall plug

9 Appendix

Rohde & Shwarz SWM200A Test Equipment 5G Waveform Setup

1. Press Power button to turn on SWM200A and wait until it initializes to proceed.
2. Press light blue ‘PRESET’ button located in upper left side of unit to erase previous settings
3. After preset, press [FREQ] button and enter 3.6GHz
4. Next, Press [LEVEL] button and enter -5.5dBm
5. Next, using the mouse or touch, tap the actual text ‘Baseband’ block box and select ‘5G NR’
6. In the general tab, ensure ‘Link Direction’ defaults to ‘Downlink’
7. Next, select ‘Quick Settings’ tab and set options identified below ONLY as follows for a single 100MHz BW carrier

© 2021 ED2 Corporation. All rights reserved.

Duplexing: TDD	Number of Carriers: 1
Deployment: FR2	Channel Bandwidth: 100MHz
Channel Raster: 60kHz (default)	Modulation: QPSK
Subcarrier Spacing: 120kHz	
Number of Resource Blocks: 66 (default)	

8. After entering data from table, select 'Apply' button
9. Next, select 'General' tab and enable waveform by enabling toggle switch located just below the 'general' tab label. Note, it's a box with a '0' on it. When selected, it changes to 'I'
10. Finally, select 'RF off' and change it to 'RF on'

For efficiency, waveform settings above can also be recalled by following steps below.

1. From preset, repeat items 3&4
2. Next, at the block diagram select 'ON' for all boxes labeled 'Baseband', 'I/Q Mod, and 'RF'
3. Then, select '5G NR' on 'baseband' box; this should now display the 'general' tab
4. In general tab, recall saved waveform named '5G_3PT6GHz-1carrier-qpsk' and hit 'select'
5. Finally, enable waveform by selecting toggle switch to on (located directly underneath 'general' text)
6. From this point, if modifying waveform is required, select 'quick settings' tab and enter required waveform

© 2021 ED2 Corporation. All rights reserved.