AquaSense®

ZER-HYD Series

Automatic Sensor-Operated Gear Driven Type Flush Valves for Water Closets and Urinals

Installation, Operation, Maintenance and Parts Manual

Water Closet Battery Models:

ZER6000AV-ONE-HYD	1.1 gpf
ZER6000AV-HET-HYD	1.28 gpf
ZER6000AV-WS1-HYD	1.6 gpf
ZER6000AV-DF-HYD	1.1/1.6 gpf
ZER6000AV-DF-HET	1.1/1.28 gpf

Urinal Battery Models:

ZER6003AV-ULF-HYD	0.125 gpf
ZER6003AV-EWS-HYD	0.5 gpf
ZER6003AV-WS1-HYD	1.0 gpf

Compliance:

- ADA Compliant
- ASSE 1037/ASME A112.1037/CSA B125.37
- cUPC
- Texas Accessibility Standard (TAS)
- WaterSense Compliant

⚠ **WARNING**: Cancer and Reproductive Harm - www.P65Warnings.ca.gov
⚠ **ADVERTENCIA:** Cáncer y daño reproductivo - www.P65Warnings.ca.gov
⚠ **AVERTISSEMENT:** Cancer et effets néfastes sur la reproduction - www.P65Warnings.ca.gov

LIMITED WARRANTY

All goods sold hereunder are warranted to be free from defects in material and factory workmanship for a period of three years from the date of purchase. Decorative finishes warranted for one year. We will replace at no costs goods that prove defective provided we are notified in writing of such defect and the goods are returned to us prepaid at Sanford, NC, with evidence that they have been properly maintained and used in accordance with instructions. We shall not be responsible for any labor charges or any loss, injury or damages whatsoever, including incidental or consequential damages. The sole and exclusive remedy shall be limited to the replacement of the defective goods. Before installation and use, the purchaser shall determine the suitability of the product for his intended use and the purchaser assumes all risk and liability whatever in connection therewith. Where permitted by law, the implied warranty of merchantability is expressly excluded. If the products sold hereunder are “consumer products,” the implied warranty of merchantability is limited to a period of three years and shall be limited solely to the replacement of the defective goods. All weights stated in our catalogs and lists are approximate and are not guaranteed.

NOTICE: READ ENTIRE MANUAL PRIOR TO INSTALLING PRODUCT
AVIS : LIRE L’ENSEMBLE DU MANUEL AVANT D’INSTALLER LE PRODUIT

Electronic emission notices

This device complies with Part 15 of the FCC Rules. Operation is subject to the following two conditions: (1) this device may not cause harmful interference, and (2) this device must accept any interference received, including interference that may cause undesired operation.

The following information refers to Zurn Smart Connected Products, types: -W2. This equipment has been tested and found to comply with the limits for a Class A digital device, pursuant to Part 15 of the FCC Rules. These limits are designed to provide reasonable protection against harmful interference intended for use in non-residential/non-domestic environments. This equipment generates, uses, and can radiate radio frequency energy and, if not installed and used in accordance with the instructions, may cause harmful interference to radio communications. However, there is no guarantee that interference will not occur in a particular installation. If this equipment does cause harmful interference to radio or television reception, which can be determined by turning the equipment off and on, the user is encouraged to try to correct the interference by one or more of the following measures:

- Reorient or relocate the receiving antenna.
- Increase the separation between the equipment and receiver.
- Connect the equipment into an outlet on a circuit different from that to which the receiver is connected.
- Consult an authorized dealer or service representative for help.

Zurn is not responsible for any radio or television interference caused by using other than specified or recommended cables and connectors or by unauthorized changes or modifications to this equipment. Unauthorized changes or modifications could void the user's authority to operate the equipment.

User manual notice

This device contains licence-exempt transmitter(s)/receiver(s) that comply with Innovation, Science and Economic Development Canada’s licence-exempt RSS(s). Operation is subject to the following two conditions:

1. This device may not cause interference.
2. This device must accept any interference, including interference that may cause undesired operation of the device.

Avis du manuel de l’utilisateur

Cet appareil contient un (des) émetteur(s)/récepteur(s) exempté(s) de licence qui est (sont) conforme(s) au(x) CNR exempté(s) de licence du ministère de l’Innovation, des Sciences et du Développement économique du Canada. L’utilisation est soumise aux deux conditions suivantes :

1. Cet appareil ne doit pas provoquer d’interférences.
2. Cet appareil doit accepter toute interférence, y compris les interférences susceptibles de provoquer un fonctionnement indésirable de l’appareil.

Warning the user to maintain 20cm of separation from the device

Avertir l’utilisateur qu’il doit maintenir une distance de 20 cm par rapport à l’appareil.

Responsible party: ZURN WATER, LLC 511 W. Freshwater Way, Milwaukee, WI U.S.A. 53204 ·
Ph. 1-855-ONE-ZURN, Fax 919-775-3541

Specifications

Sensor Range:	12” to 60” (adjustable)
Voltage:	3.2 VDC Rechargeable (LiFePO) Battery with 3.0 VDC Backup batteries [2 “AA” 1.5V Alkaline Cells in Series]
Operating Water Pressure:	25 psi [172 kPa] (Running); 80 Psi [552 kPa] Max (Static)
Operating Temperature:	35°F to 104°F [2°C to 40°C]

Important Safety Information

- Do not convert or modify this Zurn product. All warranties will be voided.
- All plumbing is to be installed in accordance with applicable codes and regulations.
- Water supply lines must be sized to provide an adequate volume of water for each fixture.
- Flush all water lines prior to making connections.
- Do not use pipe sealant or plumbing grease on any fitting other than the control stop inlet.
- Sensor units should not be located across from each other or in close proximity to highly reflective surfaces.
- Control stop should never be opened to allow flow greater than fixture is capable of evacuating. In the event of valve failure, fixture must be able to handle a continuous flow.

Prior to Installation

- Before installing your flush valve, the items listed below should already be installed on-site:
  - Water closet or urinal fixture
  - Fixture carrier
  - Drain line
  - Water supply line

Package Contents

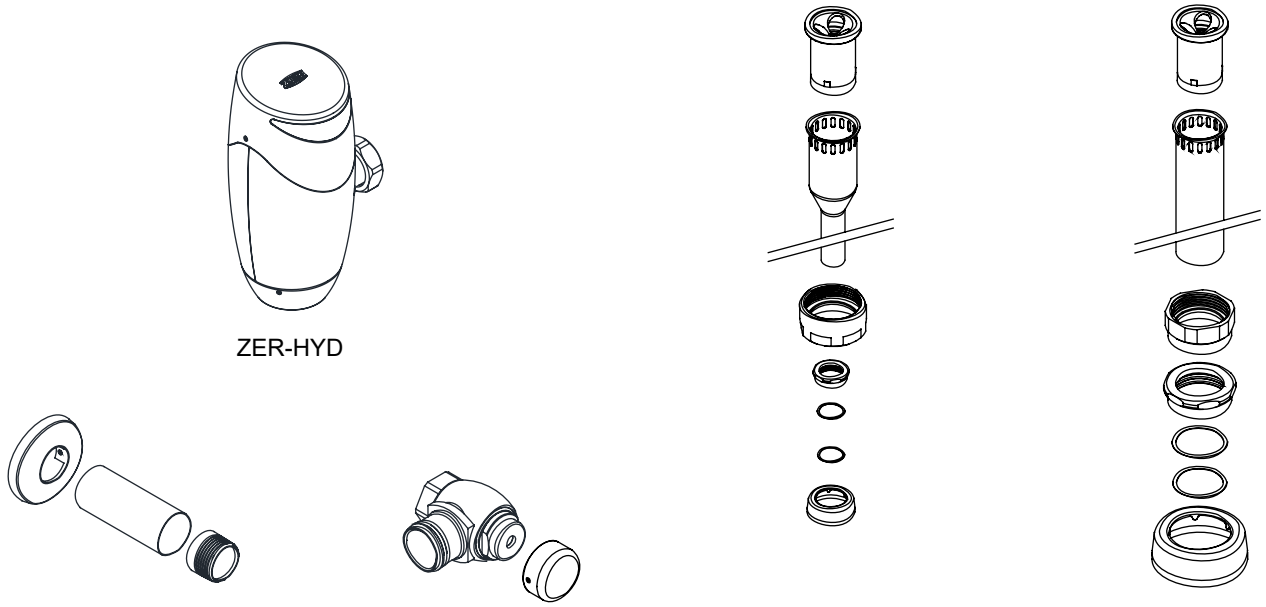

ZER-HYD

Sweat solder Connection with Cast Wall Escutcheon

Control Stop with Vandal Cap (Optional with Aqua Flush)

Vacuum Breaker and Spud Connection for Urinal

OR

Vacuum Breaker and Spud Connection for Water Closet

<u>NOTE</u>: The information in this manual is subject to change at any time without notice. Installations may be performed at different times of construction by different individuals. For this reason, these instructions should be left on-site with the facility or maintenance manager.

Required Tools

3/32”, 5/64”
Hex Key
(Supplied)

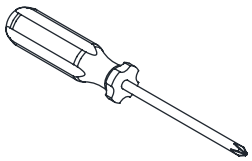

Phillips Head
Screwdriver

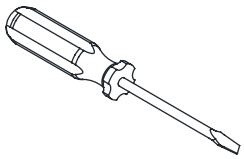

Flat Head
Screwdriver

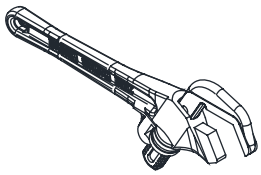

Smooth Jawed
Wrench

Optional Accessories

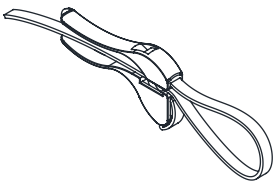

Strap Wrench

Magic Magnet
P6900-AT-MAG

Sweat Solder Adapter Installation Instructions

NOTE: Before installation, turn off water supplies to existing fixture and remove flushometer if replacing an existing device.

1. Measure distance from finished wall to the center line of the fixture spud. If necessary, cut water supply pipe 1-1/4” shorter than this measurement. De-burr by chamfering O.D. and I.D of end of water supply pipe.

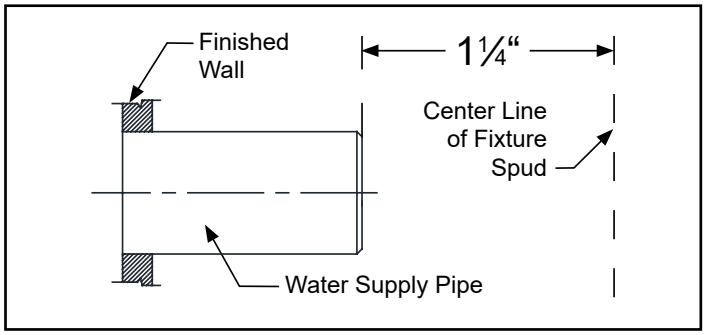

2. Slide threaded sweat solder adapter onto water supply pipe until shoulder stops on end of pipe. Then sweat-solder the adapter to water supply pipe.

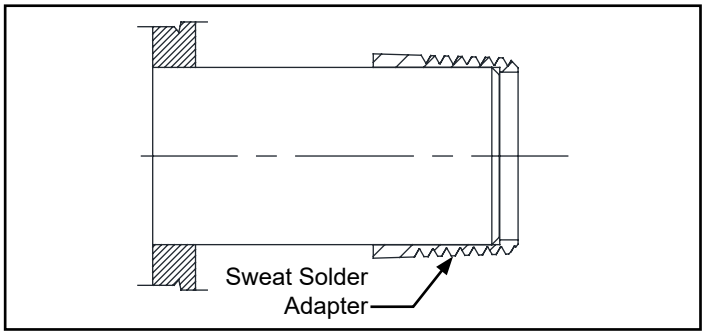

3. Measure distance from finished wall to first thread of sweat solder adapter. If necessary, cut chrome cover tube this length.

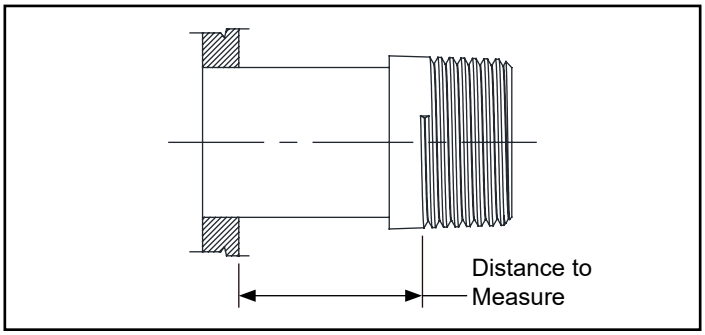

4. Slide wall escutcheon over chrome cover tube and slide both items over water supply pipe. Press wall escutcheon flush against finished wall and tighten set screw with hex wrench (supplied) to secure it in place.

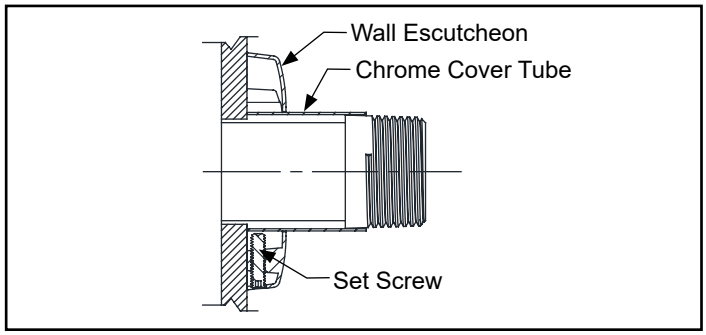

Control Stop Installation Instructions

1. Install control stop assembly by threading it onto water supply pipe and tightening with a smooth jawed wrench. Apply thread sealing compound or pipe tape to the male NPT thread on sweat solder adapter only.

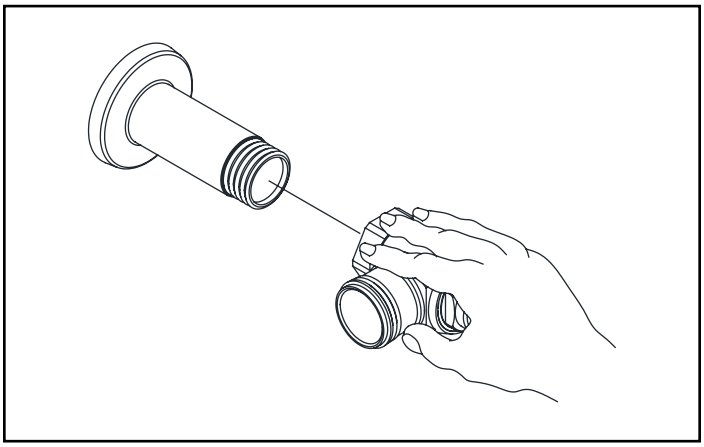

2. When all stop valves are properly connected to the water supply line and water pressure is available open the control stop using a flathead screwdriver and turning the stop valve adjustment screw counterclockwise.

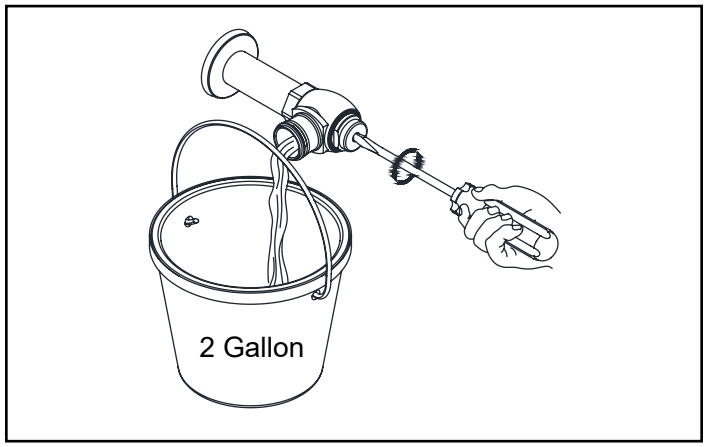

Flush Valve Installation

1. Before attaching the flush valve tailpiece to the control stop, check the O-ring seal and ensure it's properly positioned in the groove. Also, make sure the locking nut and locking snap ring are in place on the tailpiece.

   Lubricate the tailpiece o-ring with water and insert flush valve tailpiece into the control stop valve. Tighten the locking nut using a smooth-jawed wrench.

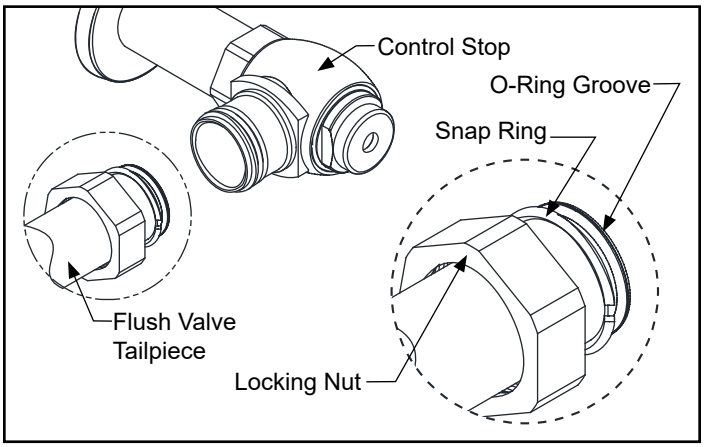

2. Loosen the set screws through two small holes on the shroud escutcheon by turning counter-clockwise. Uninstall shroud escutcheon from the valve body by turning it counter-clockwise and lower it from the shroud.

   Determine the length of vacuum breaker tube required to join the flush valve and fixture spud, and cut if necessary.

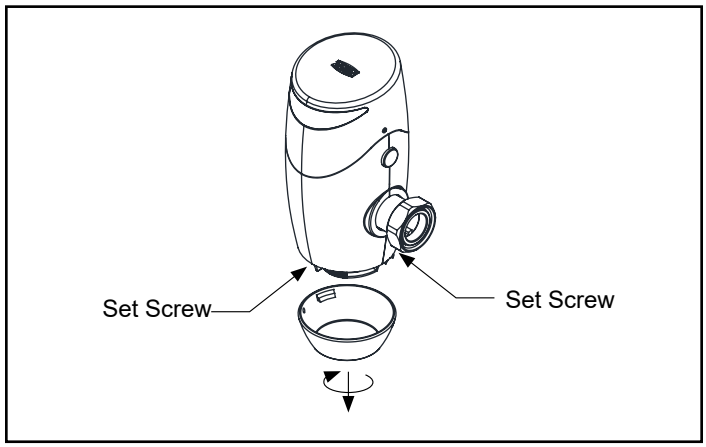

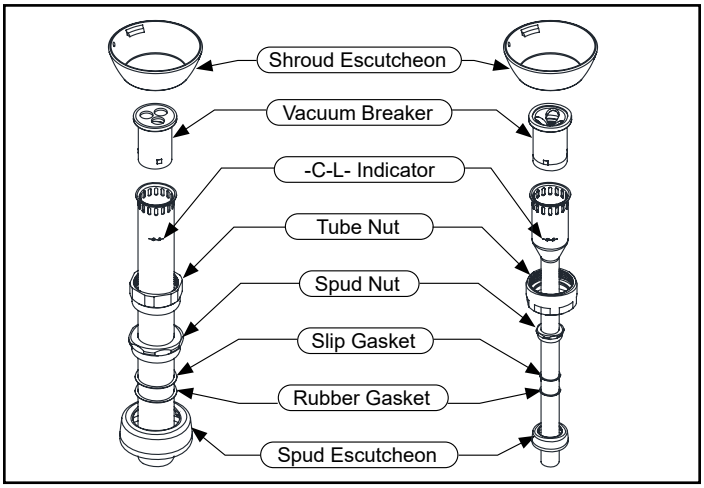

3. Slide the tube nut, spud nut, slip gasket, rubber gasket, spud escutcheon and shroud escutcheon over the vacuum breaker tube and insert tube into fixture spud. Hand tighten tube nut to valve body and hand tighten spud nut onto fixture spud. Adjust the valve assembly for plumb. Tighten fixture spud nut, vacuum breaker tube nut and locking nut with a wrench.
4. Adjust and plumb the valve assembly. Tighten all connections with smooth jawed wrench and turn on water supply at the control stop.
5. Lastly, reinstall the shroud escutcheon back onto the shroud by turning it clockwise and tighten both set screws clockwise to secure escutcheon in place .

DO NOT cut vacuum breaker tube shorter than 6" below the -C-L- indicator mark, as vacuum breaker must be 6" above the fixture. Consult plumbing Codes & Regulations for specific details.

Battery Installation

1. Turn both set screw through the small holes on the side of the valve head counterclockwise with the 3/32” Allen Wrench until they are back into the valve head. Then, remove the valve head by lifting it up.

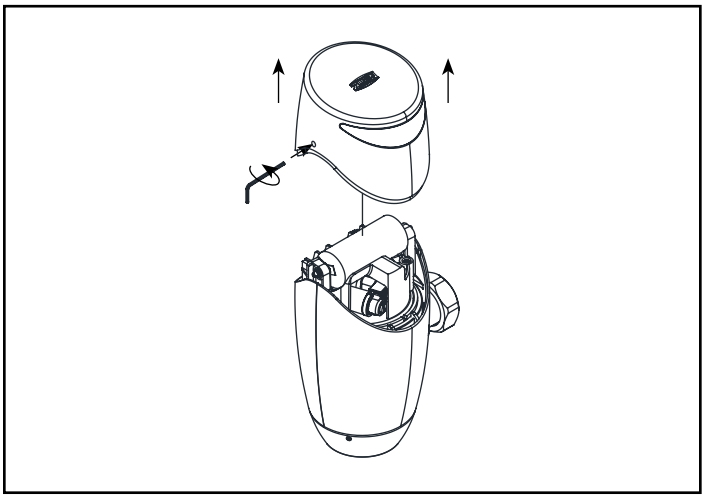

2. As shown, insert 2 AA Alkaline batteries (supplied) into the battery tray as backup batteries.

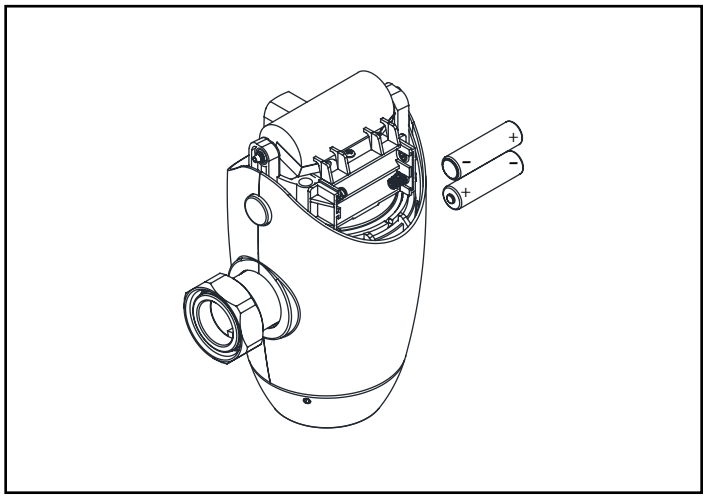

Wire Harness Connection - Right Side Water Supply

1. Connect the connector from the valve head to the connector from the valve body carefully.

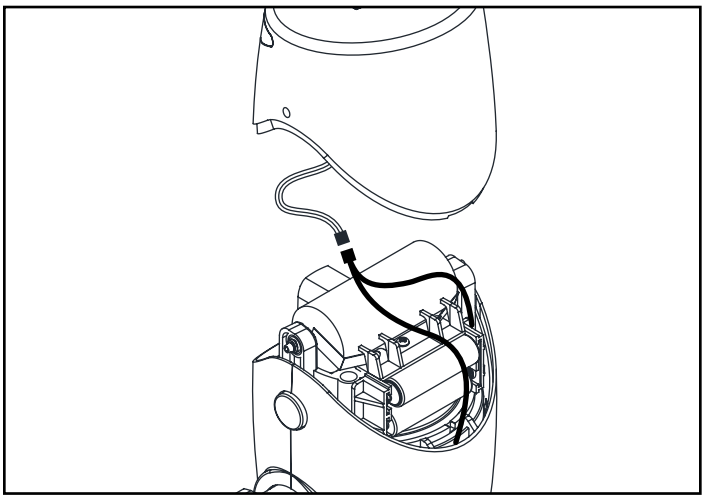

2. Bundle the connected cable harness up neatly and place in the area above backup battery tray and slowly lower valve head back on to valve body. Reinstall the valve head back onto valve body by reversing step 1 in battery installation instruction.

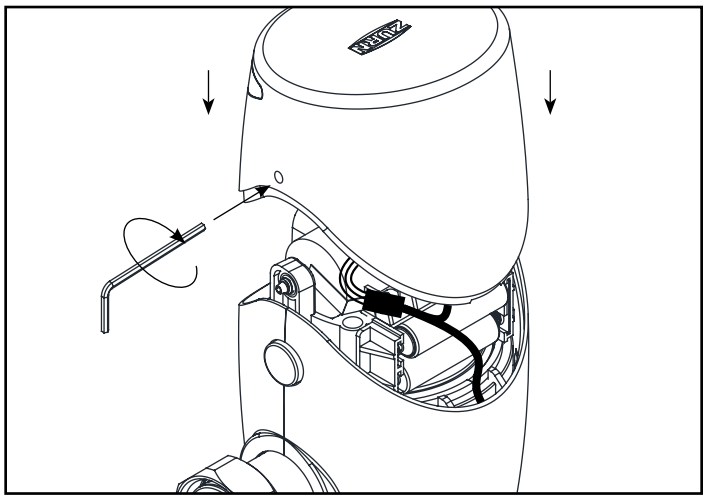

Wire Harness Connection - Left Side Water Supply

1. Connect the connector from the valve head to the connector from the valve body carefully.

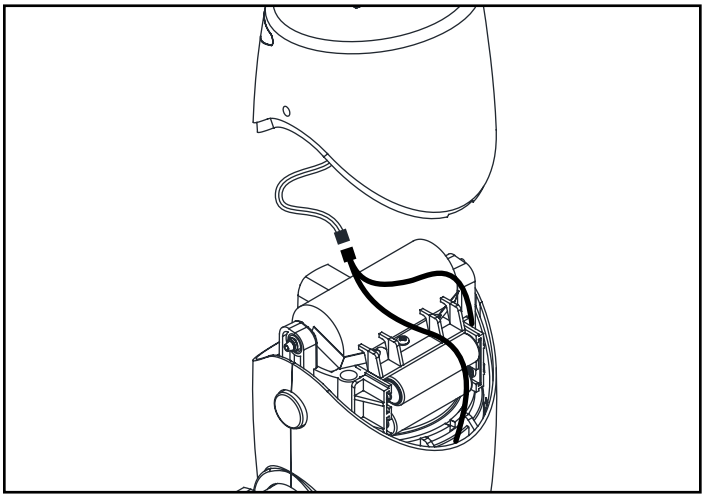

2. Rotate the valve head to have the sensor lens facing the front.

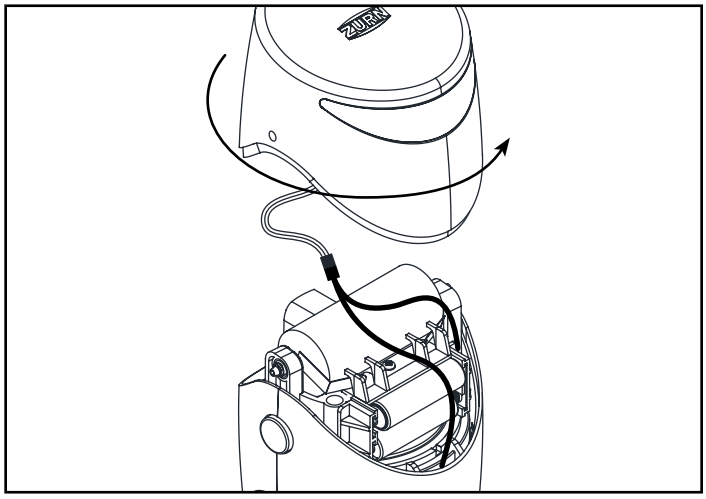

3. Bundle the wire harness neatly and flat across the rechargeable battery and position the connectors in the vacant area shown. Next, slowly lower valve head back onto valve body. Reinstall the valve head back onto valve body by reversing step 1 in battery installation instruction.

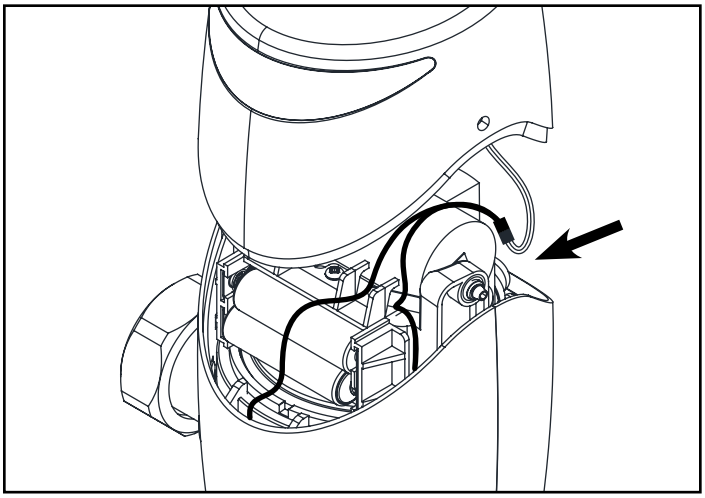

4. Follow right hand installation instruction to install flush valve with the sensor lens facing the back wall up to Harness Connection step.

Diaphragm Replacement and Cleaning

1. Turn off control stop using a flat head screwdriver turning clockwise. Afterward, utilize the manual override button to flush water out of the flush valve.

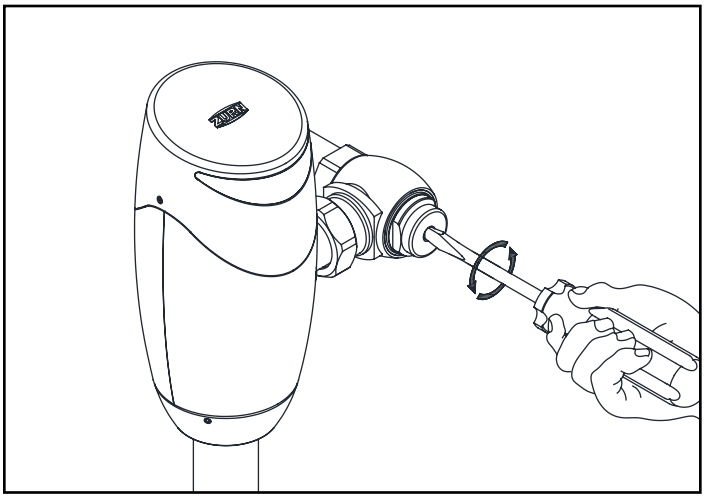

2. Loosen the set screws through two small holes on the shroud escutcheon by turning counter-clockwise. Uninstall shroud escutcheon from the valve body by turning it counter-clockwise and lower it from the shroud.

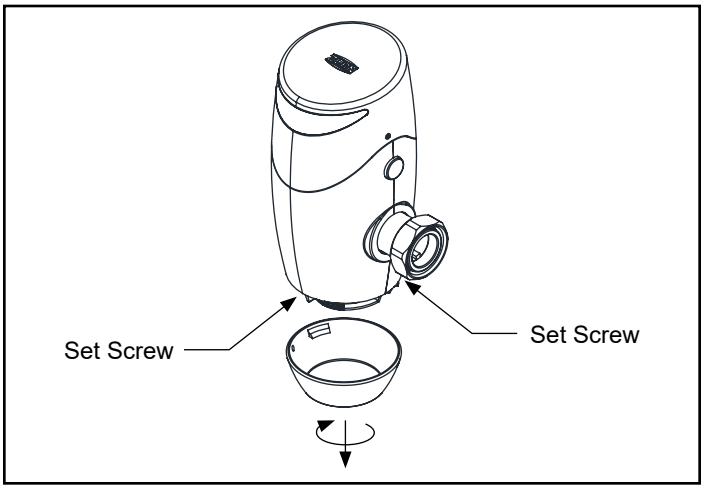

3. Lift the valve head slightly to release the two shrouds. Move the shrouds away from each other at the same time to remove them from the valve body.

   Use tape or a marker to mark the original position of the locking ring in relation to the valve body.

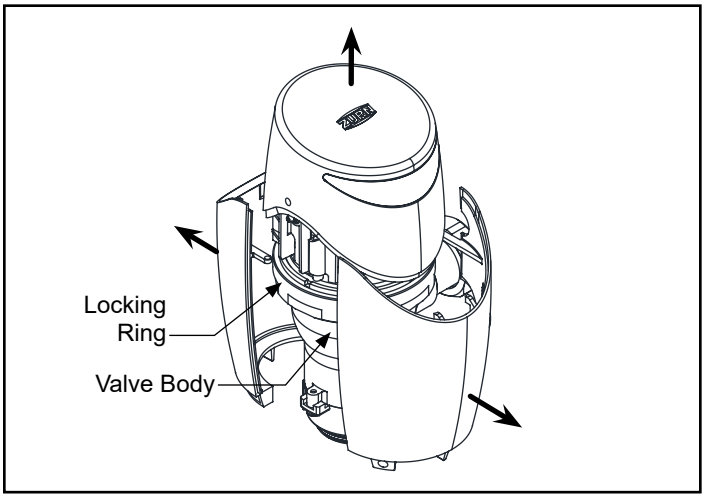

4. Ensure both the strap wrench and locking ring are completely dry for optimal grip.

   Using the supplied strap wrench to counter-clockwise loosen the valve head's locking ring. If the strap wrench is slipping, you may use a large wrench on the flats of the locking ring to loosen it.

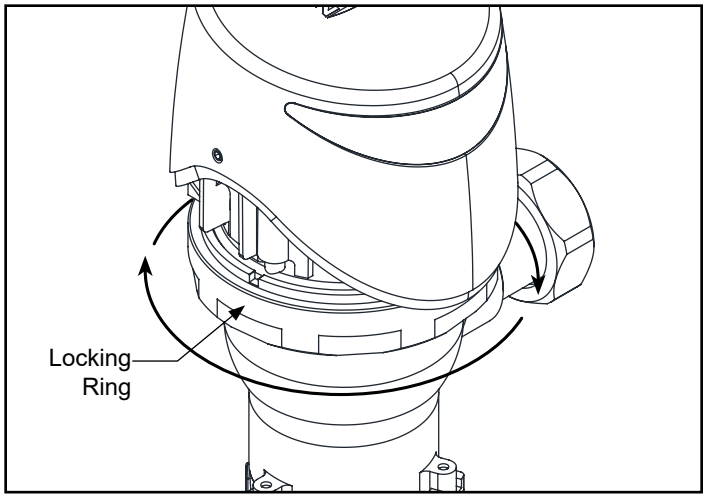

Diaphragm Replacement and Cleaning (Cont.)

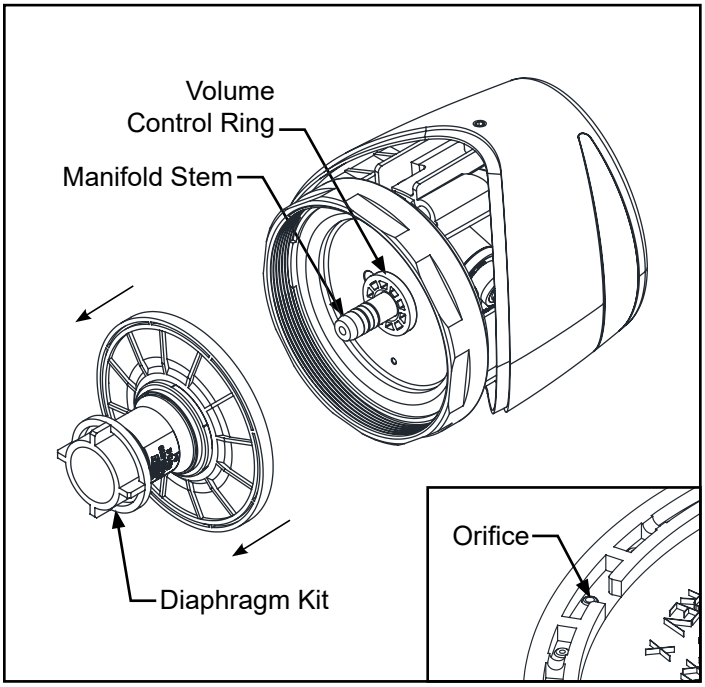

5. Remove the existing diaphragm kit from the manifold stem. Thoroughly wash the diaphragm and orifice using water.

   Install the cleaned diaphragm back into the valve body, ensure that the orifice is facing the correct orientation. For the correct orifice orientation, Refer to the retrofit installation instruction section.

   If the issue persists after cleaning, proceed to step 5B.

⚠ Do not to damage or enlarge orifice. Doing so will result in incorrect flush rate.

5B. Remove the existing diaphragm kit from the manifold stem. If the o-rings show signs of wear or damage, replace them with the new ones provided in the diaphragm repair kit.

   Install a new diaphragm kit (with matching flow rate) into the valve body, ensure that the both orifices are positioned inline with the control stop. Take care to align it properly.

   Note that unless the Volume Control Ring is missing or broken, there is no need to replace it.

6. Place the valve head with the diaphragm kit back onto the valve body. Ensure that both the strap wrench and locking ring are dry for a better grip. Tighten the locking ring to its original position using the supplied strap wrench by turning it clockwise.

7. Reverse step 2 & 3 to reinstall both shrouds and shroud escutcheon. Turn the control stop back on by turning counter-clockwise using a flat head screwdriver.

Sensor Range Adjustment

To ensure optimal performance in various restroom environments, each ZER-HYD is initially calibrated at the factory. However, in situations where there is low light or high reflectivity, it might be necessary to make adjustments to the calibration distance of the unit. This can be done using a Magic Magnet (P6900-AT-MAG).

Follow the steps outlined below to re-calibrate the ZER-HYD using a Magic Magnet (P6900-AT-MAG):

1. Stand at the desired calibration distance:
   - ~28” from the sensor in a water closet application.
   - ~22” from the sensor in a urinal application.

2. Place Magic Magnet to the right of the ZER-HYD’s lens within indicated area. Hold the Magic Magnet in that position until the user LED lights up.

3. Maintain the position of the Magic Magnet until the user LED starts blinking. Once the blinking begins, remove the Magic Magnet and allow the user LED to blink 10 times while remaining in the same position. A quick double-blink of the user LED indicates that the calibration process is complete.

4. To verify the new calibration distance, step away from the unit for 5 seconds. Then return to the exact position at which it was calibrated and observe the user LED. If the user LED blinks, it indicates that the calibration distance has been successfully calibrated.

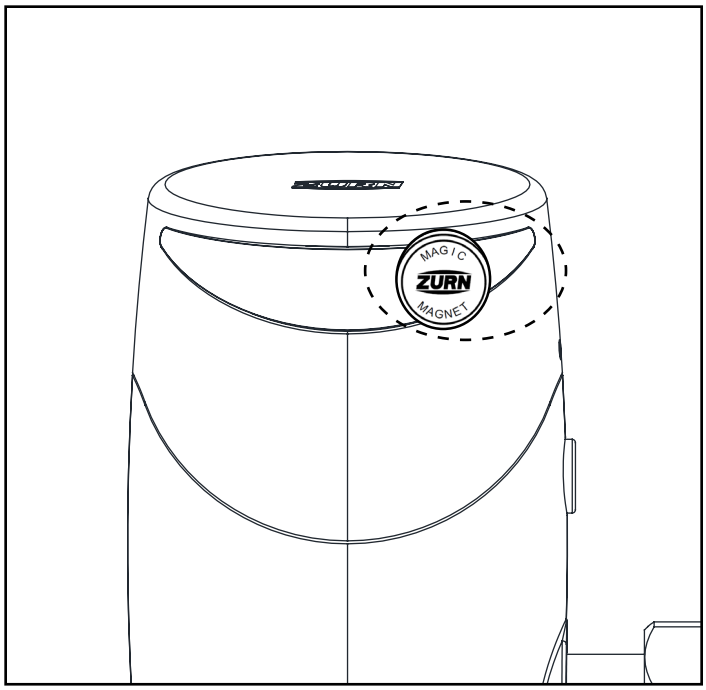

Note: To ensure proper functionality, make sure the calibration distance in water closet applications prevents the sensor from detecting the stall door. Verify this by closing the door for 10 seconds, then opening it. If the flush valve doesn’t activate, the calibration distance is suitable. Otherwise, recalibrate to a closer distance using the magnet.

Care and Cleaning Instruction

- Do not use any abrasive or chemical cleaners to clean the flushometer.
- The suggested cleaning of chrome plated surfaces is simply to clean them with mild soap and water, then dry. Commercial cleaning compounds are never recommended.
- Upon cleaning other areas of the restroom, be sure the sensor lenses are protected from other cleaning chemicals/solvents to prevent potential damages to the sensor and/or electronics.
- Valves used in installations subject to shut down because of cold and freezing conditions should be maintained in the following manner. After the main supply has been shut off and the water drained from the system, remove the stop valve cap and stop valve internals to allow the water to drain from the flush valve itself.

Dual Flush User Guide (For ZER6000AV-DF Only)

- The Dual Flush model supplies flush volumes of 1.1 and 1.6 gallons per flush. When a user is present for less than 60 seconds, the valve will flush with 1.1 gallons of water. When a user is present for over 60 seconds, the valve consumes 1.6 gallons of water. A user must be present for a minimum of 8 seconds in order to trigger a flush.
- The Dual Flush model must be paired with a fixture with a flush volume range that includes 1.1 to 1.6 gallons per flush. For a list of recommended bowls, please refer to our website, www.zurn.com, or speak with your local Zurn rep.

Trouble Shooting Guide

Problem	Indicator	Cause	Corrective Action
Flush valve does not flush.	No water flushed.	Stop valve is closed	Open stop valve
	Sensor flashes 5 times in quick succession	Flush cycle did not complete	Contact Customer Service for further instruction
	No sensor light	Batteries not making contact	Remove and reinstall batteries correctly, or replace batteries See Battery installation for reference.
		Critically low battery voltage	
	Sensor flashes once every 5 seconds	Low battery voltage indication	
	Sensor flashes every 30 seconds	Continuous user detection of object within sensor range	Recalibrate. See Sensor Range adjustment section for reference.
	Sensor flashes rapidly	Battery Powered: Batteries installed incorrectly.	Remove and reinstall batteries correctly. See Battery installation for reference.
		Hardwired: Backup batteries installed incorrectly	Remove and reinstall batteries correctly. See Battery installation for reference.
		Hardwired: Backup Battery not detected.	Install backup batteries, or reference courtesy flush & battery detection settings section to turn off backup battery detection.
	Sensor detects user, three slow flashes & two quick flashs, but fail to flush upon exiting sensor range	User/object still in sensor field	Identify and remove any user from sensor field
			Reduce sensor range distance (see Sensor Range Adjustment instructions)
		Battery power level too low to activate flush valve	Replace batteries. See Battery Installation for reference.
		Dirty sensor lens	Clean sensor lens with warm water and mild soap until free of debris
		Loose or damaged wire harness	Inspect wire harness and connection between electronics and motor
	User not detected; no LED flashes.	Sensor range may need to be adjusted	Increase sensor range distance (see Sensor Range Adjustment instructions)
		Flush valve is aimed at an angle.	Rotate flush valve head to be perpendicular to wall. See Sensor Angle Adjustment section for adjusting the flush valve head.
	Manual override button does not initiate a flush.	Stop valve is closed / turned off.	Turn on stop valve.
		MOB does not depress	Contact Customer Service.
Valve does not evacuate fixture	Insufficient volume of water to adequately siphon fixture.	Stop valve is not open enough.	Open stop valve for desired volume of water.
		Insufficient volume or pressure at supply.	Increase incoming water supply pressure to minimum 25psi.
		Insufficient volume for installed fixture	Contact Customer Service.
	Valve shuts off too quickly or short flushes.	Damaged or punctured diaphragm.	Install new diaphragm replacement kit. (See Diaphragm Replacement and Cleaning Section for replacement instruction)
		Enlarged by-pass orifice.	Install new diaphragm replacement. (See Diaphragm Replacement and Cleaning Section for replacement instruction)
		Diaphragm kit is not matched to the fixture.	Install new diaphragm replacement kit. (See Diaphragm Replacement and Cleaning Section for replacement instruction)

Trouble Shooting Guide

Problem	Indicator	Cause	Corrective Action
Valve is flushing too long or not shutting off.	High water delivery or continuous flow.	By-pass orifice is plugged or partially plugged.	Examine by-pass orifice and clean if necessary being certain not to en-large orifice opening. (See Diaphragm Replacement and Cleaning Section for cleaning instruction)
Water splashes out of fixture.	Water splashes onto floor during flush cycle.	Supply volume is too high.	Slowly close the control stop to lower water pressure.
		Mineral accumulation on vortex or spreader holes of fixture.	Remove the mineral build up.
Flush is not considered quiet.	Flush is loud.	Control stop may not be adjusted for quiet operation.	Adjust the control stop for quiet opera-tion keeping in mind the fixture evacua-tion requirements.
		Fixture may be contributing to noise.	Check noise created by fixture by placing a cover over the bowl opening to separate valve noise from bowl noise. If it is determined the fixture is too noisy, consult with fixture manufacturer.
		Piping system may be source of noise.	High pressure in the system can sometimes be controlled by the stop valve. Other sources of noise may be the absence of air chambers and shock arrestors, loose pipes, improper size pipes, etc. In these cases, the building engineer should be consulted.
Valve leaking near valve head.	Water droplets seen between valve head and valve body.	Locking ring not tight.	Tighten locking ring. See Sensor Angle Adjustment section for reference.
Valve flushed with no user present	Valve flushed with no user present	Highly reflective environment	Re-calibrate sensor range - see Sensor Range Adjustment section
		Sensor range set too far; picking up other objects	
		Flush valve may be configured to exchange the water in the trap-way at every [24 / 48 / 72] hours after no usage (default is OFF).	See Courtesy Flush Battery Detection Settings for instructions on changing dipswitch settings to achieve desired trap exchange timing.