OCCUPANCY LIGHT INSTALLATION MANUAL

WHIFFAWAY LIMITED

INDEX

Page 1 Orientation of ceiling bracket.

Page 4 Light height from floor.

Page 5 Cable length.

Page 6 Power block connection.

Page 7 Assembly of light unit.

Page 8 Activation light cycle.

STEP 1

Firstly find the centre of the doorway in the relation to the ceiling that you intend on mounting the light to. Once you have located the centre of the doorway you will need to measure out from the centre line by 150 mm to the inside of the cubicle, from the centre point of the doorway,
Please see image below.
Create a hole in the ceiling surface to allow for the power cables to run through.

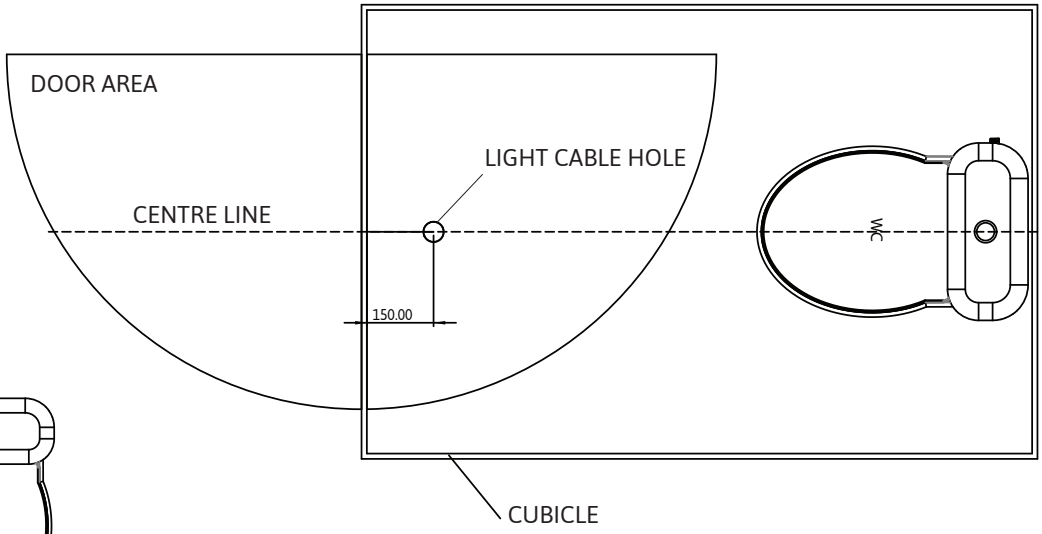

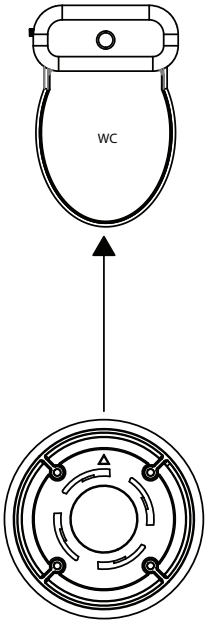

STEP 2

Once you have created the central hole its very important that the arrow is pointing towards the WC.

Each component that makes up an occupancy light has a small triangle. This triangle is a arrow that marks the direction of the sensor beam.
The arrow should always point towards the WC that the light is being installed for.

Once you have the arrow pointing towards to WC secure the ceiling mount bracket in-place with 4 x No8 screws or 4 x M4 fixings.

CEILING BRACKET MOUNT

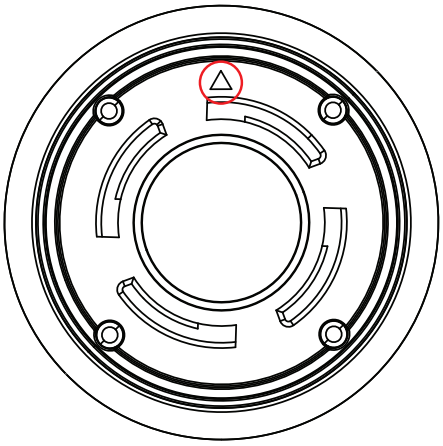

EXTENSION TUBE

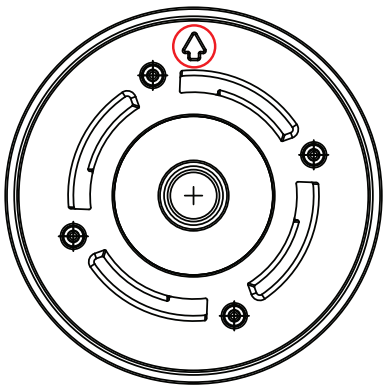

LIGHT UNIT

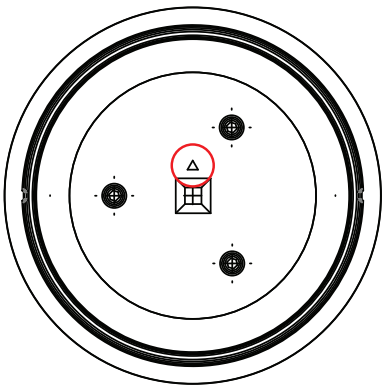

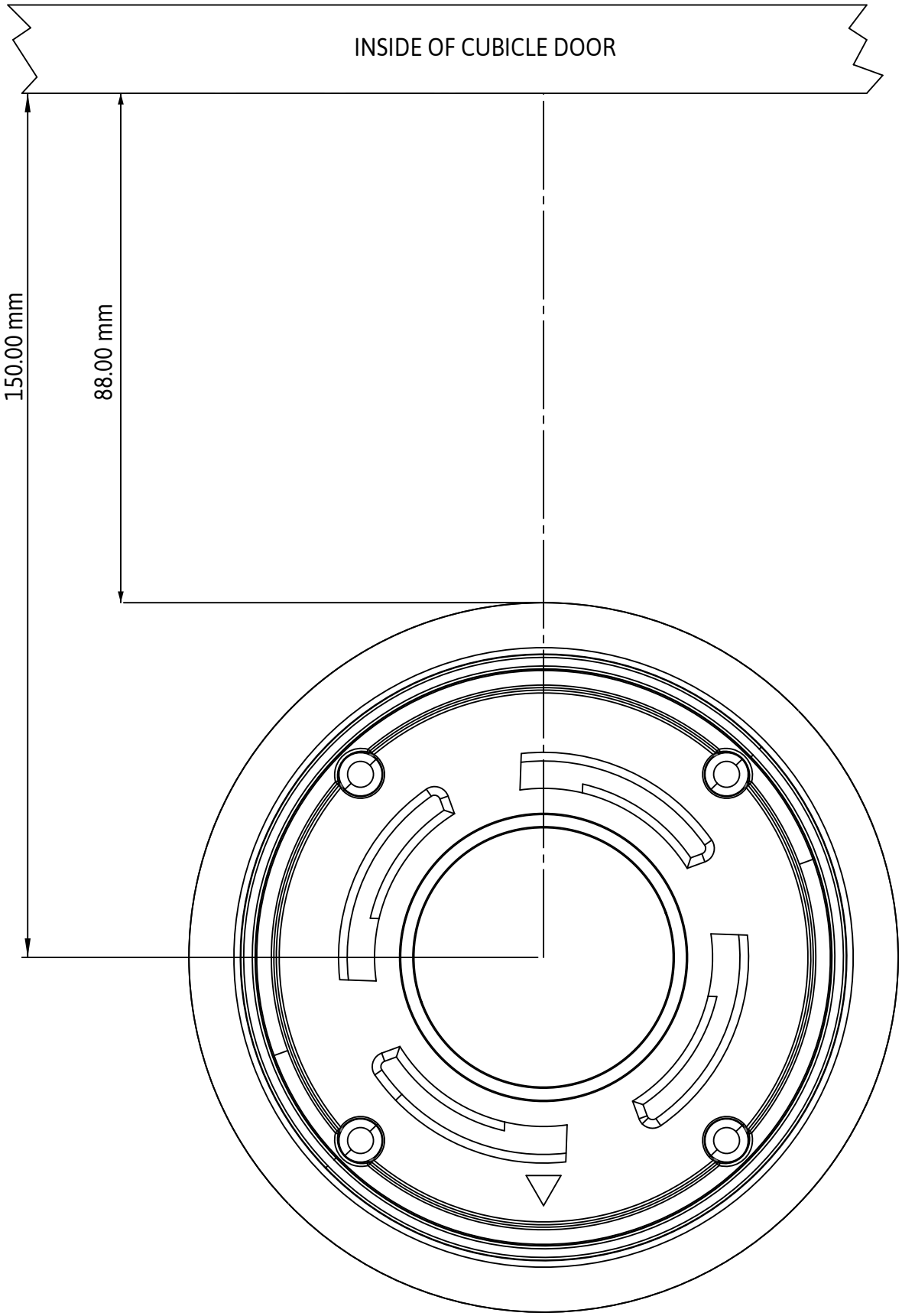
INSIDE OF CUBICLE DOOR
150.00 mm
88.00 mm

FIGURE 1: INSTALLED CEILING MOUNT (STEP 2)

The ceiling mount will come with a 'WC' sticker indicating the direction of the arrow on the moulding, allowing the angle of orientation to be checked when the extension tube is in place.

IMPORTANT TO NOTE EACH LIGHT UNIT SHOULD BE INSTALLED AT A HEIGHT OF 8.6 FEET

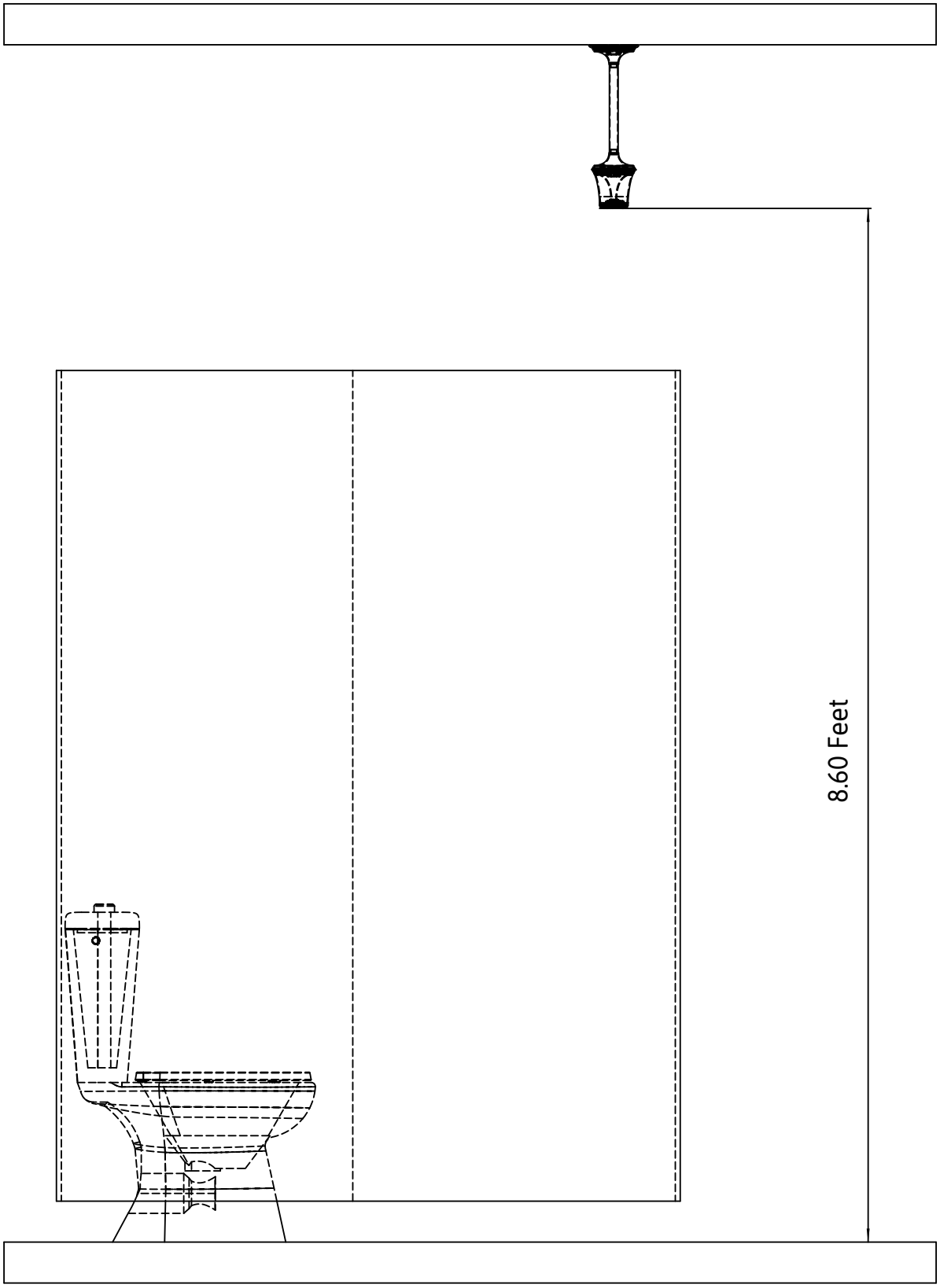

STEP 3

It is crucial that the cables you install are longer than the extension tube that is being used. Ideally the length of the wires should be 4 inches longer than the extension tube to make the installation easier when connecting to the power block.

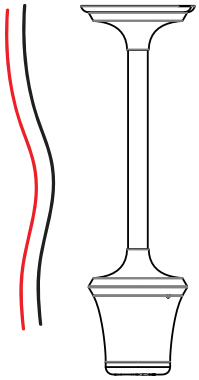

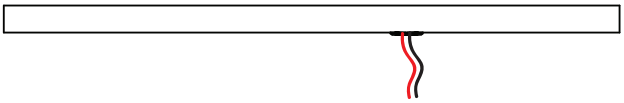

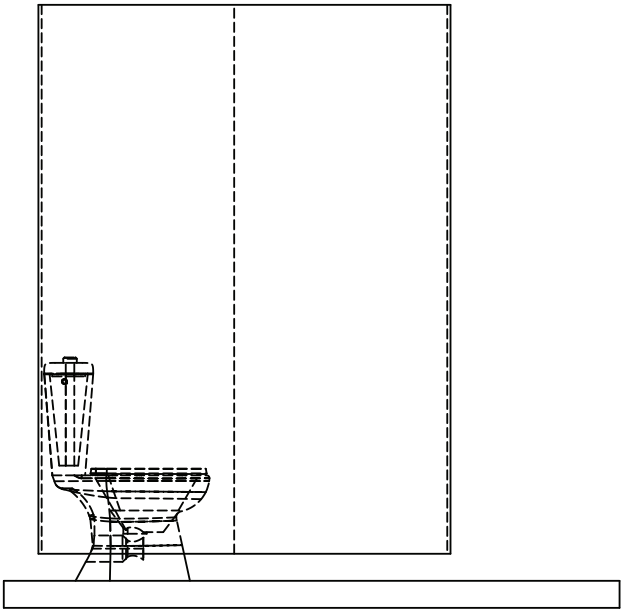

STEP 4

The ceiling mount bracket is now installed and its time to assemble the unit.

Feed the power cables though the extension tube until you see them visibly protruding out of the bottom of extension tube.

Align the bayonet fixing with the ceiling mount bracket that has already been installed on the ceiling. Twist the extension tube onto the ceiling mount using the bayonet fixing until the arrow points towards the WC.

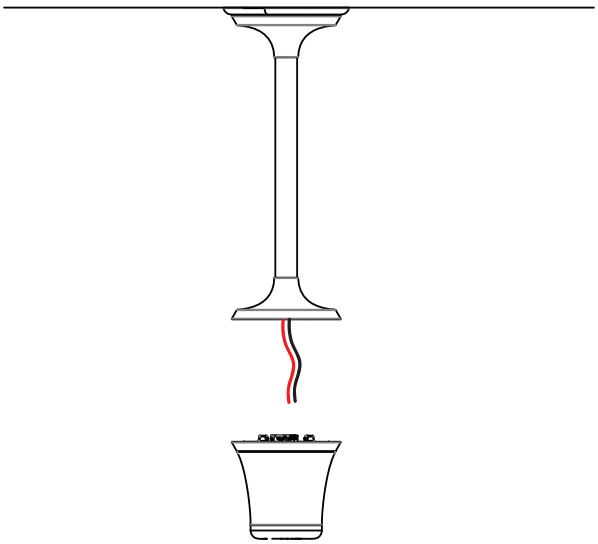

FIGURE 2: EXTENSION POLE IN PLACE (STEP 4)

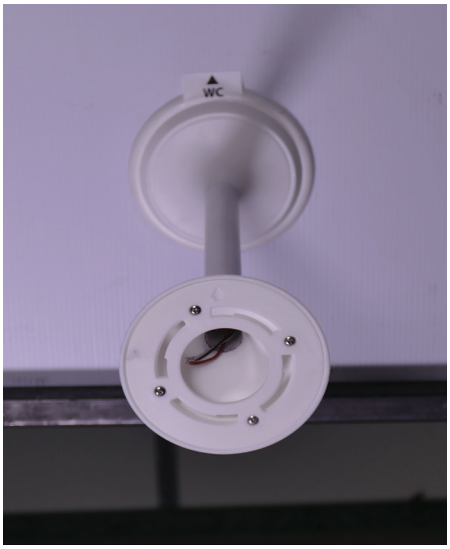

The arrow on the exposed end of the extension pole can be lined up with the WC sticker by rotating the tube when attached

STEP 5

Connecting the power block to the cables

Please note that the dip switch is on the left in the image.

Both connections are linked so either side can be used for a single light or both sides when daisy chaining the lights off a single power supply.

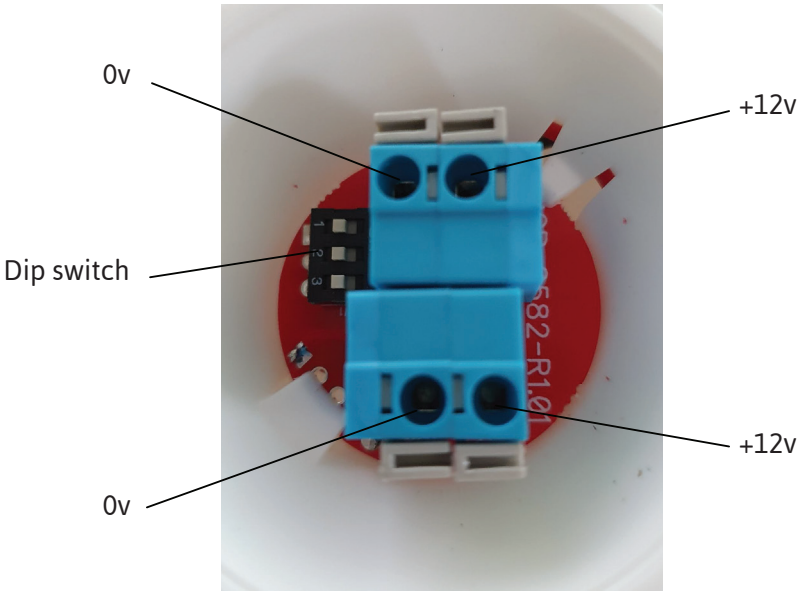

Daisy chain

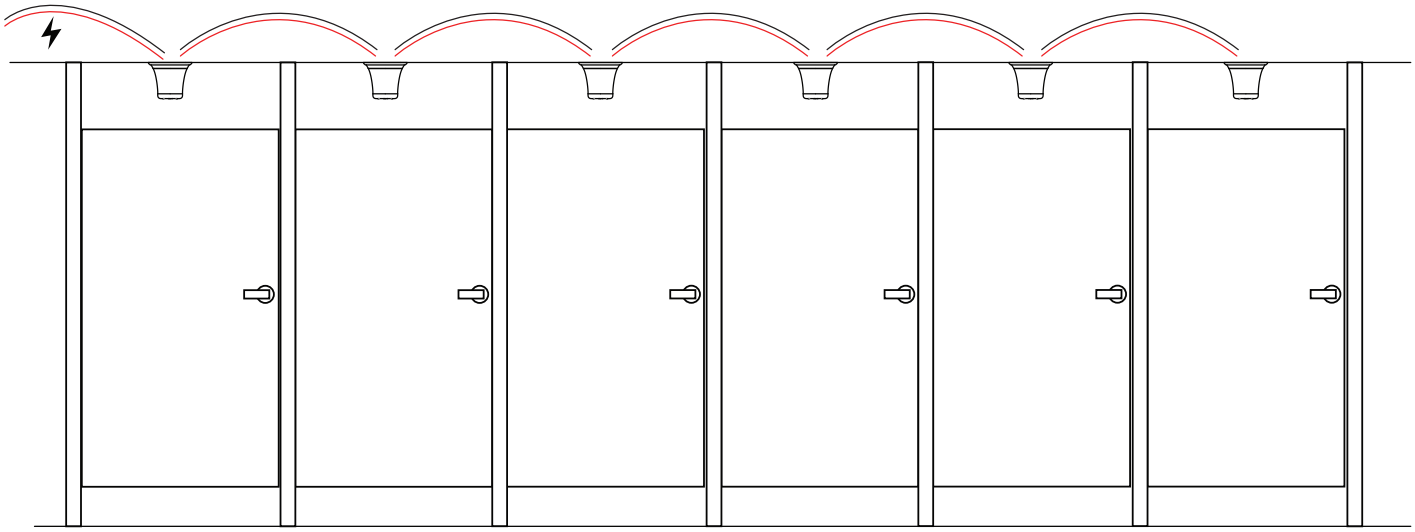

STEP 6

Once the cables are secured into the power block.

Attach the light unit to the extension tube using the bayonet fixing. Ensure that you are holding the extension tube when twisting on the light unit this is to prevent any misalignment that may accrue when assembling.

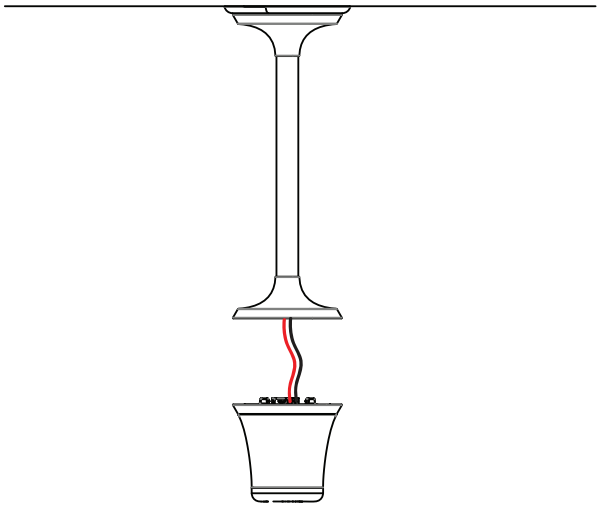

FIGURE 3: ASSEMBLED LIGHT IN POSITION

The light can be rotated into position when fitted, with the correct alignment being where the WC sticker on the light lines up with the WC sticker on the ceiling mount and all the arrows on the parts themselves line up. In order to ensure alignment of the upper bayonet fixing is not lost, the extension tube should be held in place while the light unit is twisted into position.

STEP 7

Turn on power to the light. When powered up, the light will cycle through red, green and blue colours before returning to white. Once it has completed this cycle, the light is ready to use and is awaiting instruction.

Finish by removing the stickers when the light has been tested and is functioning correctly.

FINISHED

Now that light unit is in-place and the power has been turned back on
Your occupancy light is ready to use.

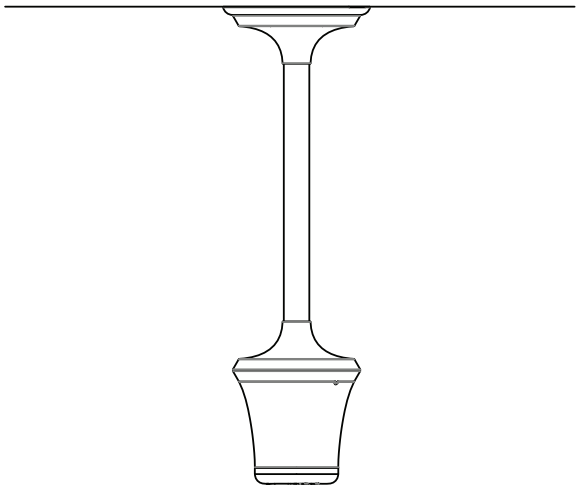

INTENDED USE OF LOP

LOP is used for showing the occupancy status of a washroom with LED color; green for free, red for occupied and blue for special use. Status is detected with an IR sensor noticing the entering and exiting of a person. Resulting data is sent wirelessly to a Wirepas protocol mesh network. Typically LOP is used together with MTXG Thingsee Gateway Global in use cases where the occupancy data is collected from several washrooms and sent via cellular connection to a data server / cloud.

INSTALLATION GUIDELINES

The LooLights run on a 12v transformer directly connected to the mains which can be either 110v or 240v. The recommended transformer is Mean Well, 80W Encapsulated Switch Mode Power Supply, 12V, Encapsulated, Medical Approved, Mfr. Part No.: IRM-90-12ST. The transformer should be housed in a no conductive environment. It is also recommend to use the following housing - ABB Junction Box, IP65 275mm x 220mm Mfr. Part No.: M128120020 or similar.

Each transformer can power up to 40 LooLights and do not need to be terminated.

Each LooLight can be wired to each other in a row. Wiring the LooLights from the transformer it is recommended to use Alpha Wire 2 Core Unscreened Industrial Cable, 0.35 mm^2 (CE, CSA, UL) Mfr. Part No.: 1172L SL005 or similar.

LEGAL NOTICES

Hereby, WhiffAway Ltd declares that the radio equipment type LOP is in compliance with Directive 2014/53/EU. The full text of the EU declaration of conformity is available at the following internet address: https://????????.???

LOP operates at Bluetooth® 2.4 GHz frequency band. Maximum radio-frequency power transmitted is +4.0 dBm.

Manufacturer name and address:
WhiffAway Ltd
Queensmead Rd
HP10 9XA High Wycombe
United Kingdom

FCC REQUIREMENTS FOR OPERATION IN THE UNITED STATES

FCC Information for the User

This product does not contain any user serviceable components and is to be used with approved, internal antennas only. Any product changes of modifications will invalidate all applicable regulatory certifications and approvals.

FCC Guidelines for human Exposure

This equipment complies with FCC radiation exposure limits set forth for an uncontrolled environment. This equipment should be installed and operated with minimum distance of 20 cm between the radiator and your body. This transmitter must not be co-located or operating in conjunction with any other antenna or transmitter.

Federal Communications Commission Statement

This device complies with Part 15 Rules. Operation is subject to the following two conditions:
• This device may not cause harmful interference, and
• This device must accept any interference received, including interference that may cause undesired operation.

FCC Radio Frequency Interference Warnings & Instructions

This equipment has been tested and found to comply with the limits for a Class B digital device, pursuant to Part 15 of the FCC Rules. These limits are designed to provide reasonable protection against harmful interference in a residential installation. This equipment uses and can radiate radio frequency energy and, if not installed and used in accordance with the instructions, may cause harmful interference to radio communications. However, there is no guarantee that interference will not occur in a particular installation. If this equipment does cause harmful interference to radio or television reception, which can be determined by turning the equipment off and on, the user is encouraged to try to correct the interference by one or more of the following methods:

• Increase the separation between the equipment and the receiver.
• Connect the equipment into an electrical outlet on a circuit different from that which the radio receiver is connected
• Consult the dealer or and experienced radio/TV technician for help

FCC Caution

Any changes or modifications not expressly approved by the party responsible for compliance could void the user's authority to operate this equipment.
This device complies with Part 15 of the FCC Rules. Operation is subject to the following two conditions:
1) This device may not cause harmful interference, and
2) this device must accept any interference received, including interference that may cause undesired operation.

Industry Canada:

This device complies with RSS-247 of the Industry Canada Rules. Operation is subject to the following two conditions: (1) This device may not cause harmful interference, and (2) this device must accept any interference received, including interference that may cause undesired operation.

Ce dispositif est conforme à la nor me RSS-247 d'Industrie Canada applicable aux appareils radio exempts de licence. Son fonctionnement est sujet aux deux conditions suivantes: (1) le dispositif ne doit pas produire de brouillage préjudiciable, et (2) ce dispositif doit accepter tout brouillage reçu, y compris un brouillage susceptible de provoquer un fonctionnement indésirable

Radiation Exposure Statement :

This device complies with ISED radiation exposure limits set forth for an uncontrolled environment.

NOTE IMPORTANTE: Déclaration d'exposition aux radiations:
Cet équipement est conforme aux limites d'exposition aux rayonnements ISED établies pour un environnement non contrôlé. Cet équipement doit être installé et utilisé avec une distance minimale de 20 cm entre le radiateur et votre corps.

FCC ID: 2AY4MZURNOL
IC ID: 27057-ZURNOL